Dave Lawton's Replication of Stan Meyer's Water Fuel Cell. Stanley Meyer of the USA is probably the most famous person in the field of producing hydroxy gas from water. Stan was granted many patents in this and other fields. His earliest work on hydroxy gas was a cell which Stan named his "Water Fuel Cell" in an attempt to indicate that the cell would produce a fuel from water. Stan died some years ago, and recently, Dave Lawton of the UK built a cell intended to be a replication of Stan's Water Fuel Cell. Unlike the cells mentioned earlier in this chapter, the Water Fuel Cell uses distilled water or tap water without any additive. However, like Bob Boyce's electrolyser, a complex waveform is used to drive the cell. The objective here though, is to generate the hydroxy gas while using very little current.



Dave Lawton

The video of Dave Lawton's replication of Stanley Meyer's demonstration electrolyser (not his production electrolyser) seen at http://www.free-energy-info.com/WFCrep.wmv has caused several people to ask for more details. The electrolysis shown in that video was driven by an alternator, solely because Dave wanted to try each thing that Stan had done. Dave's alternator and the motor used to drive it are shown here:



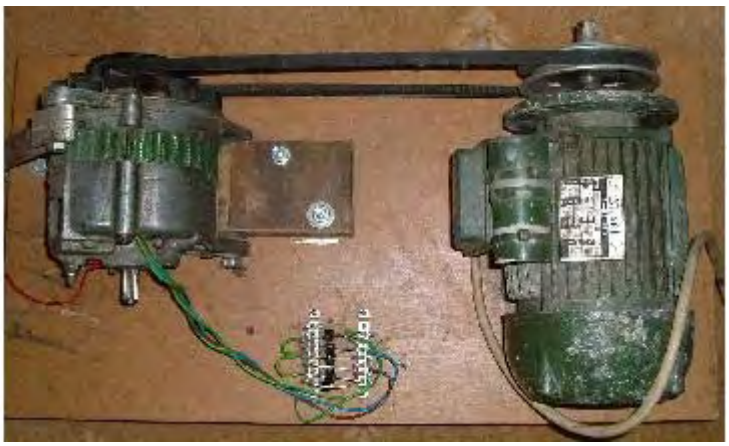

The field coil of the alternator is switched on and off by a Field-Effect Transistor (a "FET") which is pulsed by a 555 timer circuit. This produces a composite waveform which produces an impressive rate of electrolysis. The tubes in this replication are made of 316L grade stainless steel, five inches long although Stan's tubes were about sixteen inches long. The outer tubes are 1 inch in diameter and the inner tubes 3/4 inch in diameter. As the wall thickness is 1/16 inch, the gap between them is between 1 mm and 2 mm. The inner pipes are held in place at each end by four rubber strips about one quarter of an inch long.

The container is made from two standard 4 inch diameter plastic drain down-pipe coupler fittings connected to each end of a piece of acrylic tube with PVC solvent cement. The acrylic tube was supplied already cut to size by Wake Plastics, 59 Twickenham Road, Isleworth, Middlesex TW7 6AR Telephone 0208-560-0928. The seamless stainless steel tubing was supplied by: http://www.metalsontheweb.co.uk/asp/home.asp

It is not necessary to use an alternator - Dave just did this as he was copying each thing that Stan Meyer did. The circuit without the alternator produces gas at about the same rate and obviously draws less current as there is no drive motor to be powered. A video of the non-alternator operation can be seen at http://www.free-energy-info.co.uk/WFCrep2.wmv.

The electrolyser has an acrylic tube section to allow the electrolysis to be watched, as shown here:





The electrolysis takes place between each of the inner and outer tubes. The picture above shows the bubbles just starting to leave the tubes after the power is switched on. The picture below shows the situation a few seconds later when the whole of the area above the tubes is so full of bubbles that it becomes completely opaque:



The mounting rings for the tubes can be made from any suitable plastic, such as that used for ordinary food-chopping boards, and are shaped like this:



And the 316L grade stainless steel, seamless tubes:



Here is the assembly ready to receive the inner tubes (wedged into place by small pieces of rubber):



The electrical connections to the pipes are via stainless steel wire running between stainless steel bolts tapped into the pipes and stainless steel bolts running through the base of the unit:

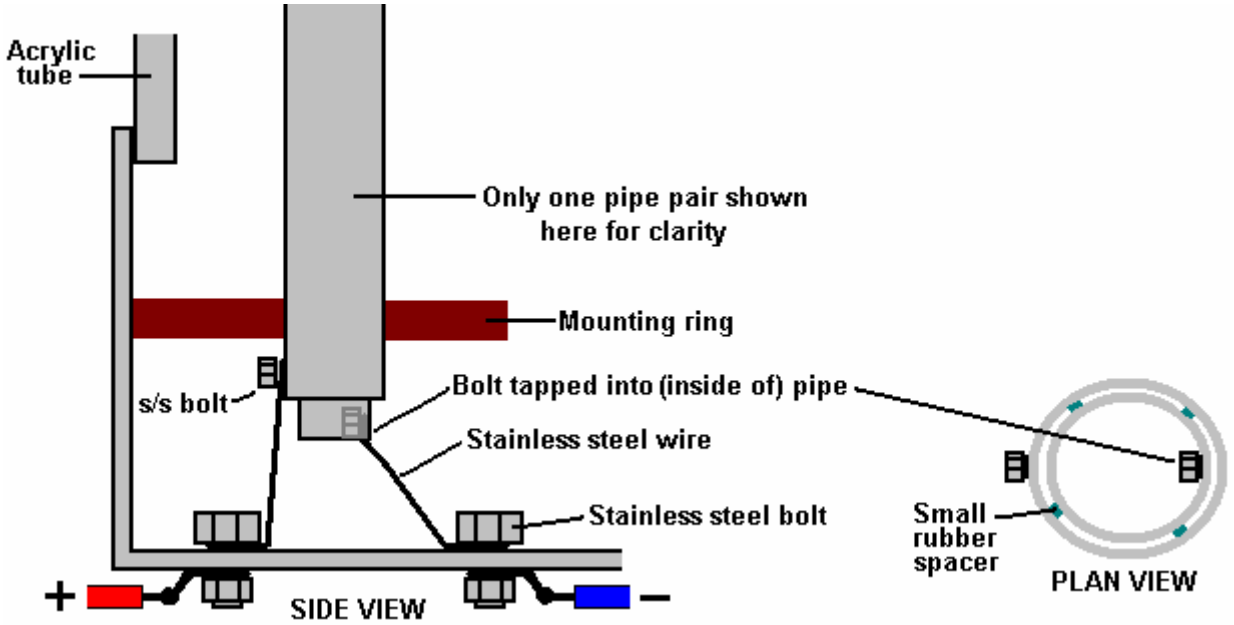

The bolts tapped into the inner tubes should be on the inside. The bolts going through the base of the unit should be tapped in to give a tight fit and they should be sealed with Sikaflex 291 or marine GOOP bedding agent which should be allowed to cure completely before the unit is filled for use. An improvement in performance is produced if the non-active surfaces of the pipes are insulated with any suitable material. That is, the outsides of the outer tubes and the insides of the inner tubes, and if possible, the cut ends of the pipes.

While Dave's style of construction is simple and straightforward, recently, a copy of one of Stan Meyer's actual construction drawings has surfaced. The image quality of this copy is so low that much of the text can't be read,

so the replication presented here may not be exact or might be missing some useful item of information. Stan's construction is unusual. First, a piece of plastic is shaped as shown here:

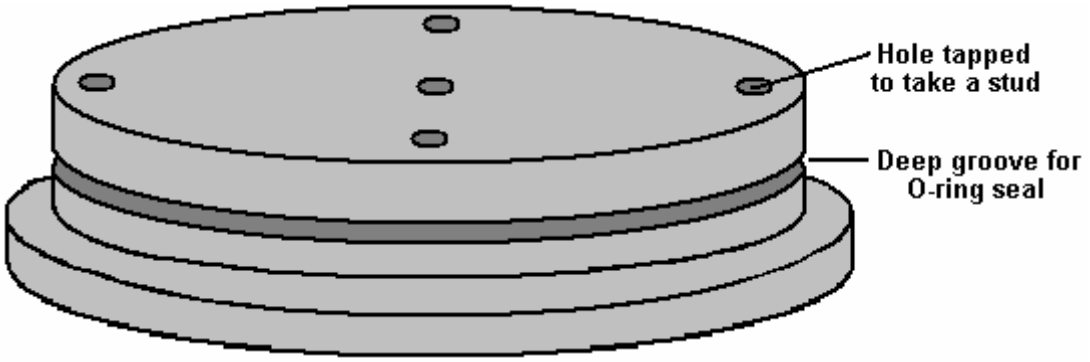

The size of this disc is matched exactly to the piece of clear acrylic used for the body of the housing. The drawing does not make it clear how this disc is attached to the acrylic tube, whether it is a tight push fit, glued in place or held in position with bolts which are not shown. The implication is that a ring of six bolts are driven through the top and tapped into the acrylic tube, as these are shown on one of the plan views, though not on the cross-section. It would also be reasonable to assume that a similar ring of six bolts is also used to hold the base securely in position. There is a groove cut in the plastic base to take an O-ring seal which will be compressed tightly when the disc is in place. There are either two or three threaded stud recesses plus two through holes to carry the electric current connections. The pipe support arrangement is unusual:

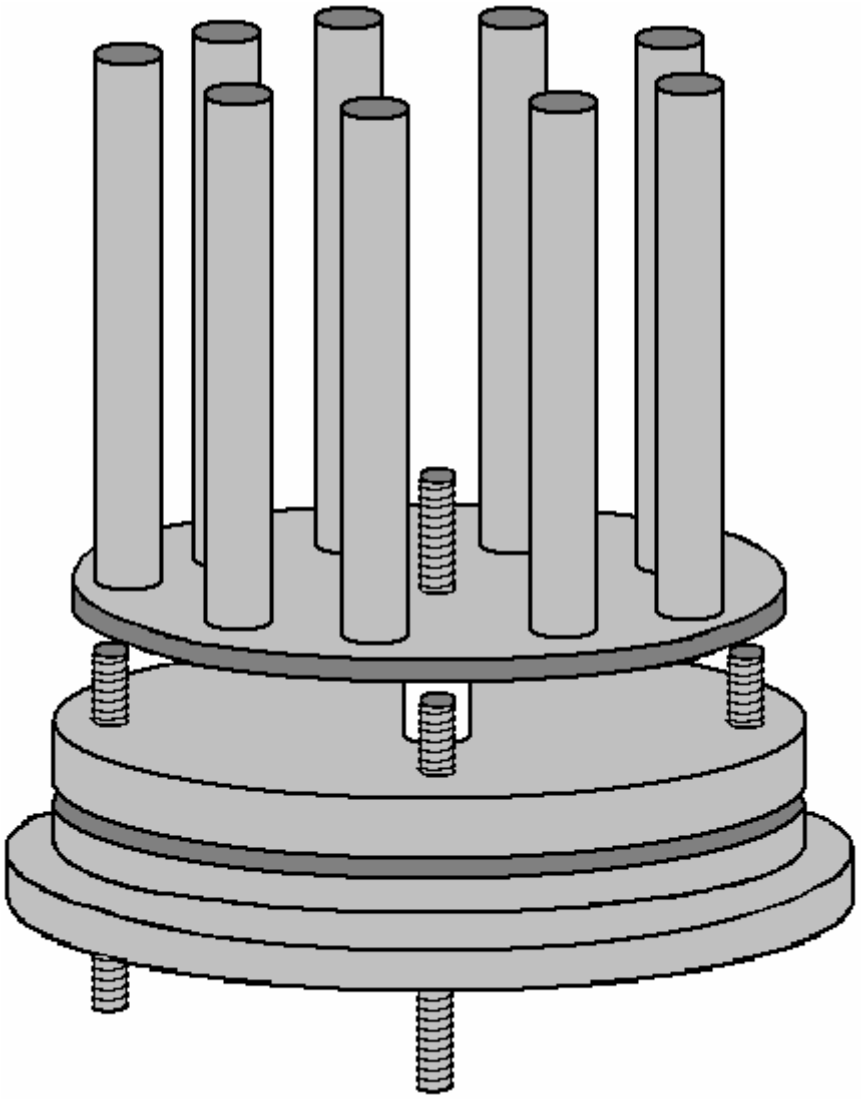

A ring of nine evenly-spaced inner pipes are positioned around the edge of a steel disc which is slightly smaller than the inside dimension of the acrylic tube. The pipes appear to be a tight push-fit in holes drilled very accurately through the disc. These holes need to be exactly at right-angles to the face of the disc in order for the pipes to be exactly aligned with the acrylic tube – definitely a drill-press job. The disc is mounted on a central threaded rod which projects through the plastic base disc, and a plastic spacer is used to hold the disc clear of the studs positioned at ninety degrees apart around the outer edge of the base disc.

The mounting for the outer tubes is also most unusual. A piece of steel plate is cut with nine projecting arms at evenly-spaced positions around a circular washer shape as shown here:

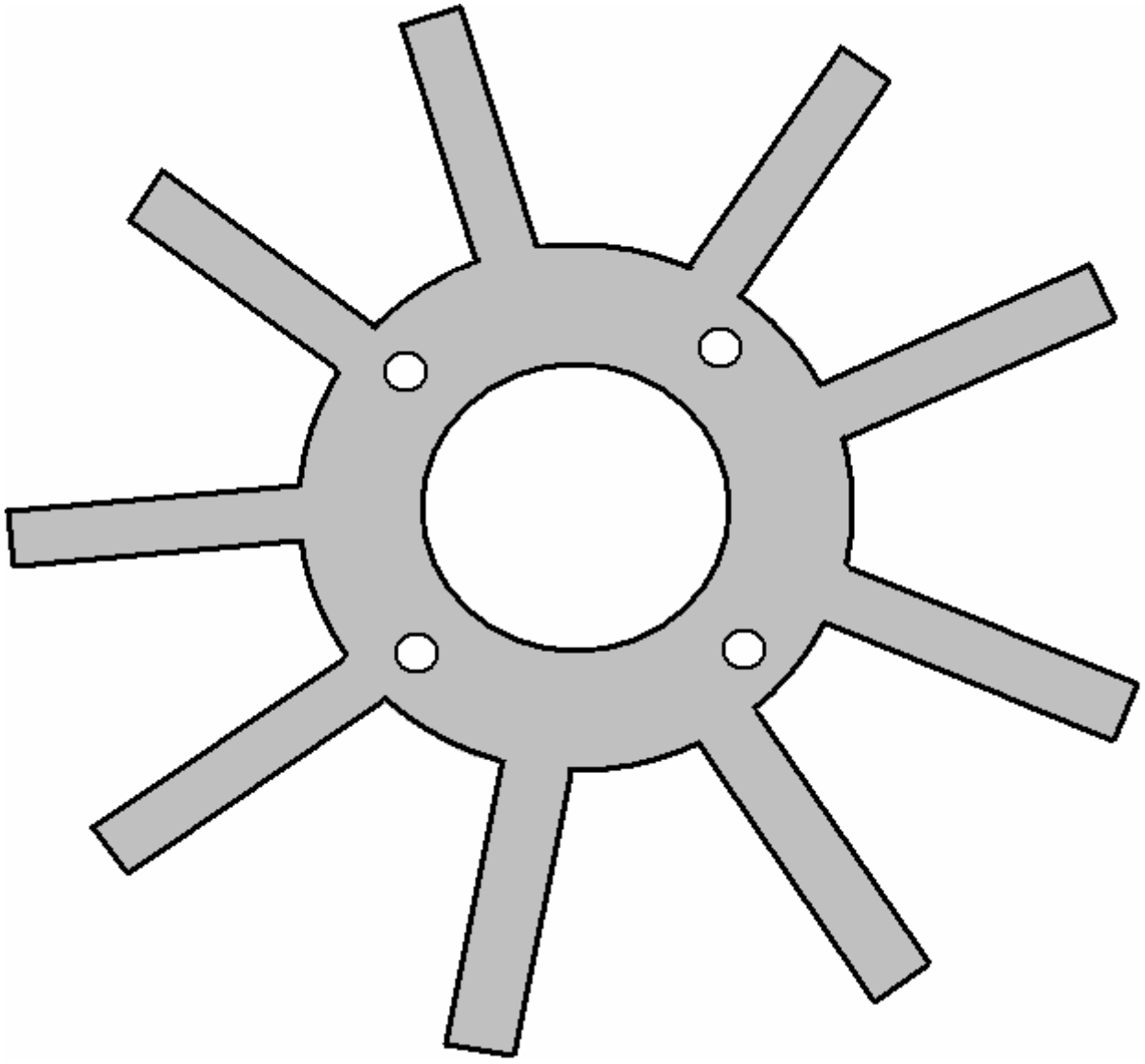

This piece has four holes drilled in it to match the stud positions of the plastic base piece. The number of studs is not specified and while I have shown four, the plate resonance might be helped if there were just three. The size is arranged so that when the arms are bent upwards at right-angles, they fit exactly against the inner face of the acrylic tube.

These arms get two bends in them in order to kink them inwards to form mounts for the outer tubes. The degree of accuracy needed her is considerable as it appears that there are no spacers used between the inner and outer tubes. This means that the very small gap of 1.5 mm or so has to be maintained by the accuracy of these mounts for the outer tubes.

It should be noted that the inner tubes are much longer than the outer tubes and that the outer tubes have a tuning slot cut in them. All of the inner tubes are mechanically connected together through their steel mounting disc and all of the outer tubes are connected together through the ring-shaped steel disc and its kinked arm

mounts. It is intended that both of these assemblies should resonate at the same frequency, and they are tuned to do just that. Because the inner tubes have a smaller diameter, they will resonate at a higher frequency than a larger diameter pipe of the same length. For that reason, they are made longer to lower their natural resonant frequency. In addition to that, the slots cut in the outer tubes are a tuning method which raises their resonant pitch. These slots will be adjusted until every pipe resonates at the same frequency.

Looking initially at the mechanical design, suggests that the assembly is impossible to assemble, and while that is almost true, as it will have to be constructed as it is assembled and it appears that the inner and outer pipe assembly can't be taken apart after assembly. This is the way they are put together:

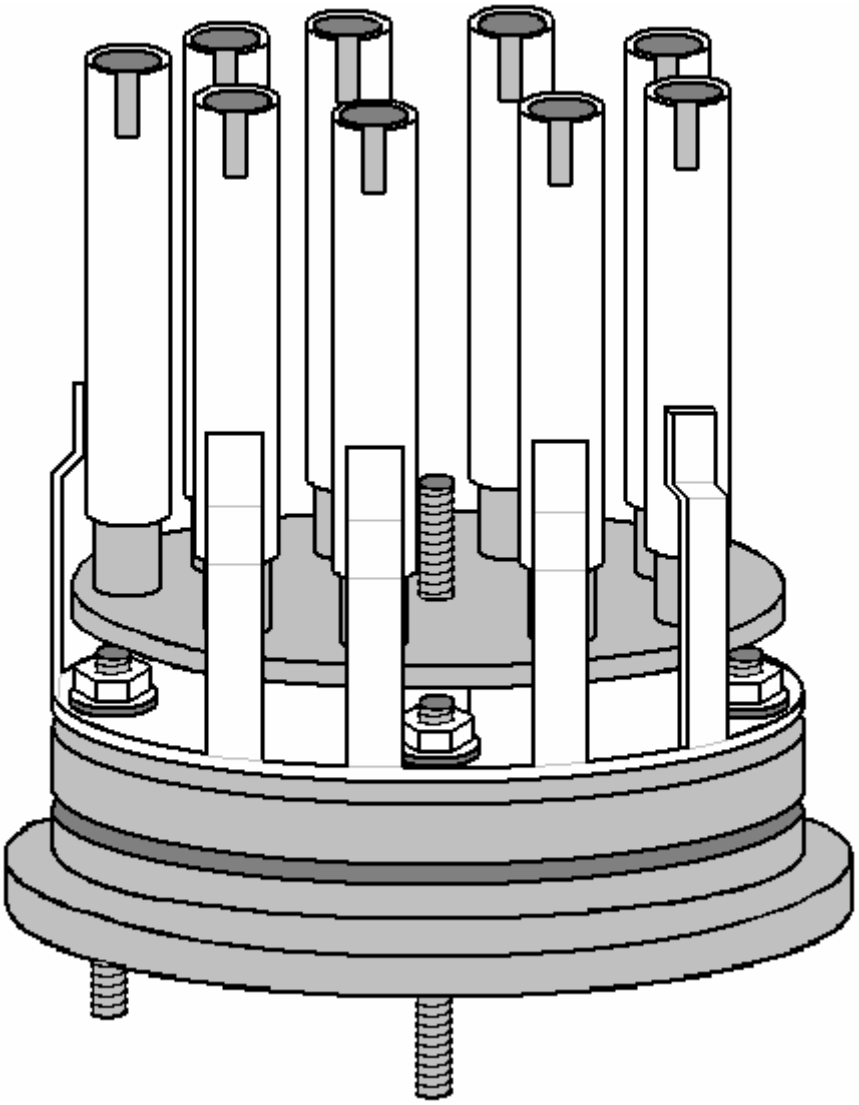

The ring support for the outer pipes is not bolted securely to the plastic base but instead it is spaced slightly above it and mounted on just the stud points. This ring is underneath the slightly smaller diameter disc which holds the inner pipes. This makes it impossible for the two components to be slid together or apart, due to the length of the pipes. This suggests that either the inner pipes are pushed into place after assembly (which is highly unlikely as they will have been assembled before for tuning) or that the outer pipes are welded to their supports during the assembly process (which is much more likely).

One of the "studs" is carried right through the plastic base in order that it can become the positive connection of the electrical supply, fed to the outer pipes. The central threaded rod is also carried all the way through the plastic base and is used to support the steel plate holding the inner pipes as well as providing the negative electrical connection, often referred to as the electrical "ground".

Another plastic disc is machined to form a conical lid for the acrylic tube, having a groove to hold an O-ring seal and the water inlet for refilling and the gas output tube. The drawing mentions the fact that if tap water is used, then the impurities in it will collect in the bottom of the electrolyser when the water is removed by being converted to hydroxy gas. This means that the cell would have to be rinsed out from time to time. It also draws attention to

the fact that the gasses dissolved in the tap water will also come out during use and will be mixed with the hydroxy gas output.

When these various components are put together, the overall cell construction is shown like this:

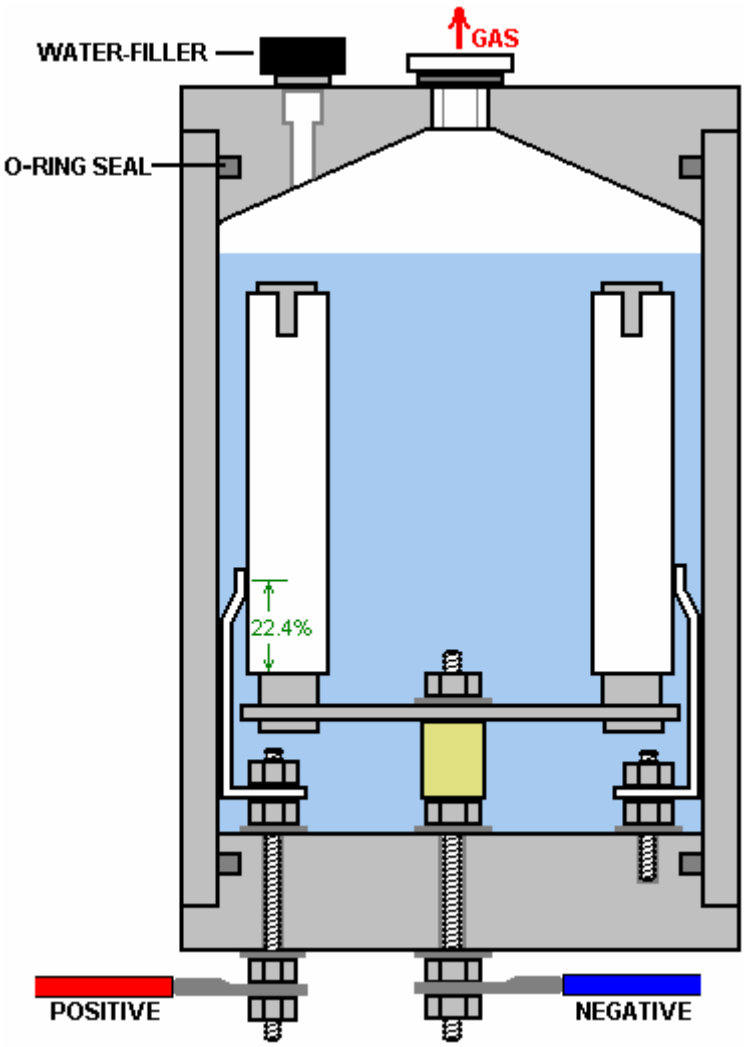

This cross-sectional view may be slightly misleading as it suggests that each of the nine outer pipes has its own separate bracket and this is probably not the case as they are connected together electrically through the steel ring-shaped disc and should vibrate as a single unit. It is tempting to use separate brackets as that would allow the assembly to be taken apart quite easily, but the electrical contacts of such a system would be much inferior and so it is not to be recommended.

Because of the way that all of the inner pipes are connected together and all of the outer pipes are connected together electrically, this form of construction is not suited to the three-phase alternator drive shown below, where the nine pipes would have to be connected in separate sets of three. Instead, the solid-state circuit is used, which is very effective and which does not have the size, weight, noise and increased current of the alternator arrangement.

If accuracy of construction is a problem, then it might be possible to give the outer pipes a deliberate slope so that they press against the inner pipes at the top, and then use one short spacer to force them apart and give the desired spacing. It seems clear that Stan worked to such a degree of constructional accuracy that his pipes were perfectly aligned all along their lengths.

Dave Lawton points out that the connection point of the brackets for the outer pipes is highly critical as they need to be at a resonating node of the pipes. The connection point is therefore at 22.4% of the length of the pipe from the bottom of the pipe. Presumably, if a slot is cut in the top of the pipe, then the resonant pipe length will be measured to the bottom of the slot and the connection point set at 22.4% of that length.

Dave Lawton's pipe arrangement can be driven either via an alternator or by an electronic circuit. A suitable circuit for the alternator arrangement is:

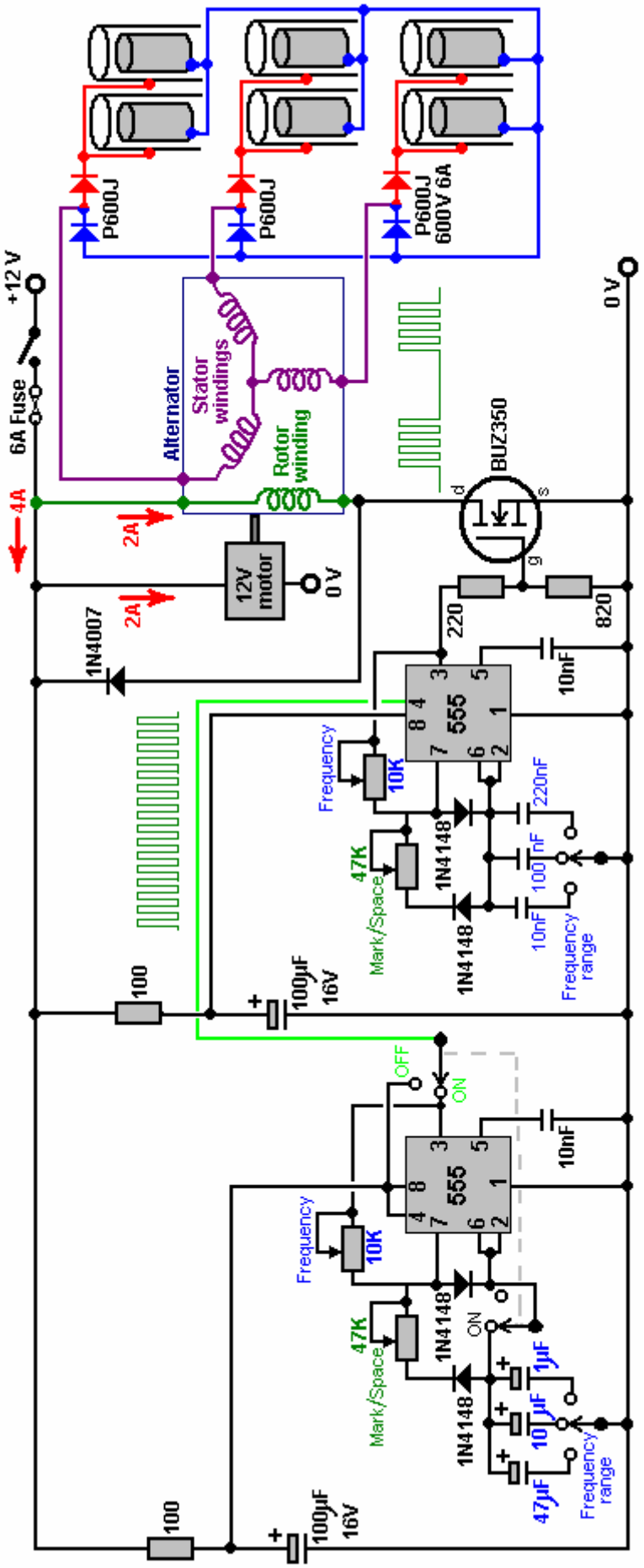

In this rather unusual circuit, the rotor winding of an alternator is pulsed via an oscillator circuit which has variable frequency and variable Mark/Space ratio and which can be gated on and off to produce the output waveform shown below the alternator in the circuit diagram. The oscillator circuit has a degree of supply de-coupling by the 100 ohm resistor feeding the 100 microfarad capacitor. This is to reduce voltage ripple coming along the +12 volt supply line, caused by the current pulses through the rotor winding. The output arrangement feeding the pipe electrodes of the electrolyser is copied directly from Stan Meyer's circuit diagram.

It is not recommended that you use an alternator should you decide to build a copy of your own. But if you decide to use one and the alternator does not have the windings taken to the outside of the casing, it is necessary to open the alternator, remove the internal regulator and diodes and pull out three leads from the ends of the stator windings. If you have an alternator which has the windings already accessible from the outside, then the stator winding connections are likely to be as shown here:

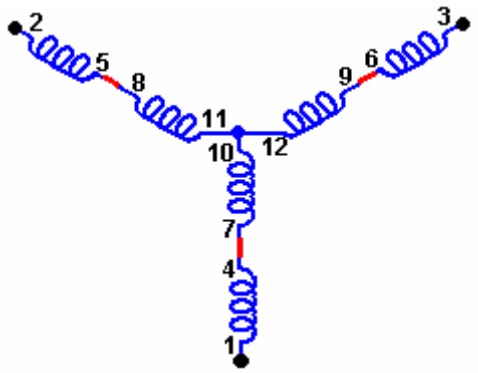

The motor driving Dave's alternator draws about two amps of current which roughly doubles the power input to the circuit. There is no need for the size, weight, noise, mechanical wear and current draw of using a motor and alternator as pretty much the same performance can be produced by the solid-state circuit with no moving parts.

Both circuits have been assessed as operating at anything from 300% to 900% of Faraday's "maximum electrical efficiency", it should be stressed that the inductors used in this circuit, form a very important role in altering and amplifying the voltage waveform applied to the cell. Dave uses two "bi-filar wound" inductors, each wound with 100 turns of 22 SWG (21 AWG) enamelled copper wire on a 9 mm (3/8") diameter ferrite rod. The length of the ferrite rod is not at all critical, and a ferrite toroid could be used as an alternative, though that is more difficult to wind. These bi-filar coils are wound at the same time using two lengths of wire side by side. The solid-state circuit is shown here:

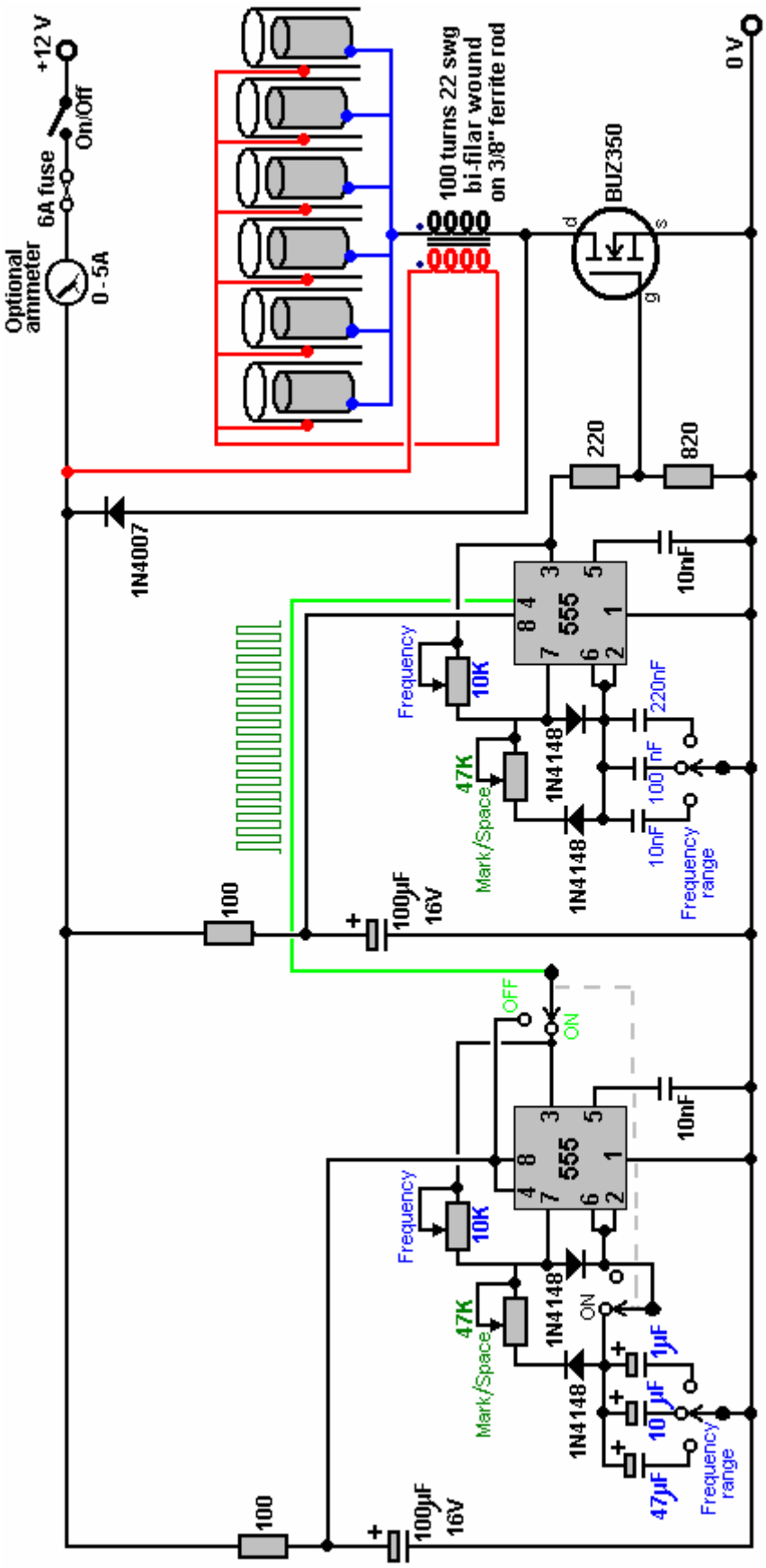

Circuit operation:

The main part of the circuit is made up of two standard 555 chip timers. These are wired to give an output waveform which switches very rapidly between a high voltage and a low voltage. The ideal waveform shape coming from this circuit is described as a “square wave” output. In this particular version of the circuit, the rate at which the circuit flips between high and low voltage (called the “frequency”) can be adjusted by the user turning a knob. Also, the length of the ON time to the OFF time (called the “Mark/Space Ratio”) is also adjustable.

This is the section of the circuit which does this:

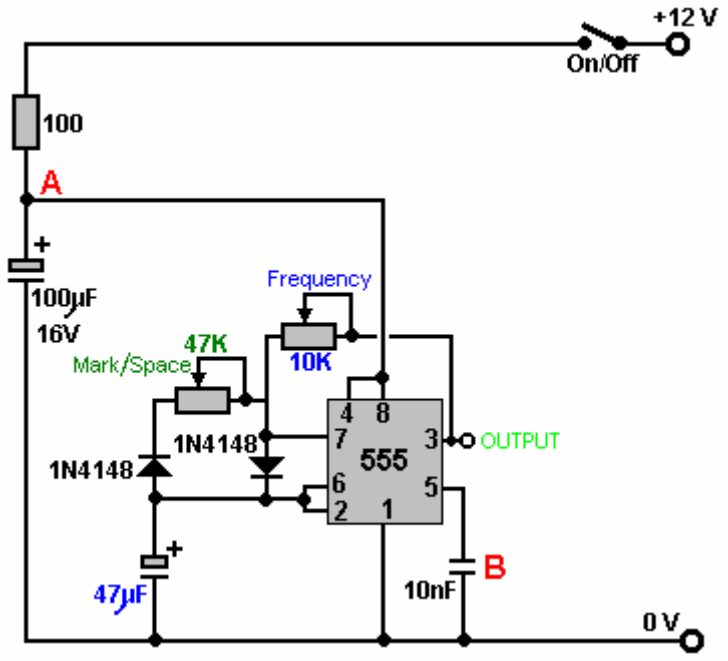

The 100 ohm resistor and the 100 microfarad capacitor are there to iron out any ripples in the voltage supply to the circuit, caused by fierce pulses in the power drive to the electrolysis cell. The capacitor acts as a reservoir of electricity and the resistor prevents that reservoir being suddenly drained if the power supply line is suddenly, and very briefly, pulled down to a low voltage. Between them, they keep the voltage at point "**A**" at a steady level, allowing the 555 chip to operate smoothly.

The very small capacitor "**B**" is wired up physically very close to the chip. It is there to short-circuit any stray, very short, very sharp voltage pulses picked up by the wiring to the chip. It is there to help the chip to operate exactly as it is designed to do, and is not really a functional part of the circuit. So, for understanding how the circuit works, we can ignore them and see the circuit like this:

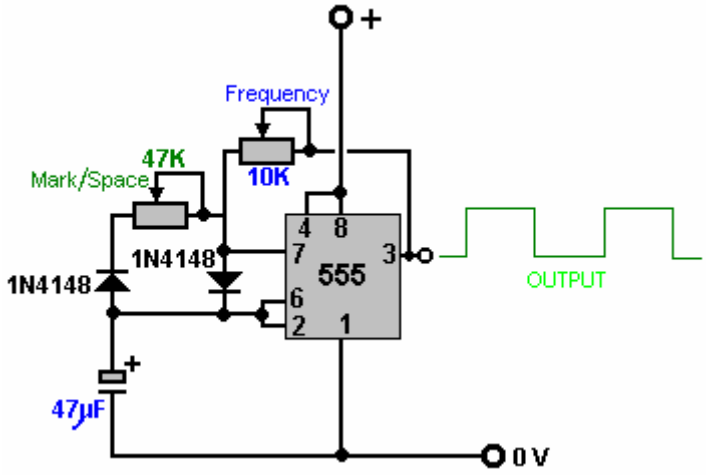

This circuit generates output pulses of the type shown in green with the voltage going high, (the "Mark") and low (the "Space"). The 47K variable resistor (which some people insist on calling a "pot") allows the length of the Mark and the Space to be adjusted from the 50 - 50 shown, to say, 90 - 10 or any ratio through to 10 - 90. It should be mentioned that the "47K" is not at all critical and these are quite likely to be sold as "50K" devices. Most low cost components have a plus or minus 10% rating which means that a 50K resistor will be anything from 45K to 55K in actual value.

The two "1N4148" diodes are there to make sure that when the Mark/Space 47K variable resistor is adjusted, that it does not alter the frequency of the output waveform in any way. The remaining two components: the 10K variable resistor and the 47 microfarad capacitor, both marked in blue, control the number of pulses produced per

second. The larger the capacitor, the fewer the pulses per second. The lower the value of the variable resistor, the larger the number of pulses per second.

The circuit can have additional frequency tuning ranges, if the capacitor value is altered by switching in a different capacitor. So the circuit can be made more versatile by the addition of one switch and, say, two alternative capacitors, as shown here:

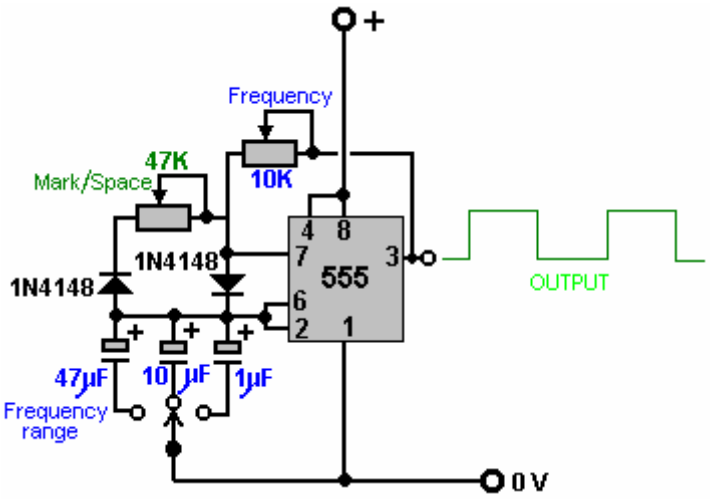

The capacitors shown here are unusually large because this particular circuit is intended to run relatively slowly. In the almost identical section of the circuit which follows this one, the capacitors are very much smaller which causes the switching rate to be very much higher. Experience has shown that a few people have had overheating in this circuit when it is switched out of action, so the On/Off swicth has been expanded to be a two-pole changeover switch and the second pole used to switch out the timing elements of the 555 chip. The complete version of this section of the circuit is then:

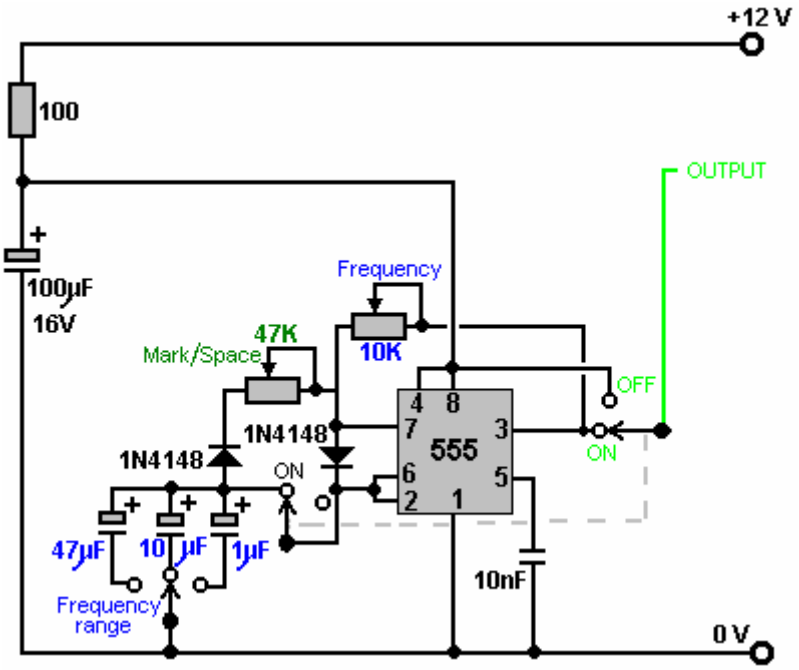

which just has one additional switch to allow the output to be stopped and the 12-volt supply line to be fed instead. The reason for this is that this part of the circuit is used to switch On and Off an identical circuit. This is called “gating” and is explained in Chapter 12 which is an electronics tutorial.

The second part of the circuit is intended to run at much higher speeds, so it uses much smaller capacitors:

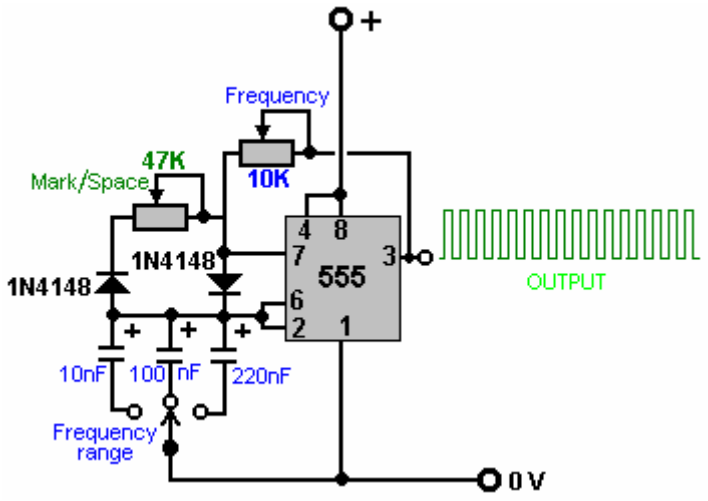

So, putting them together, and allowing the first circuit to switch the second one On and Off, we get:

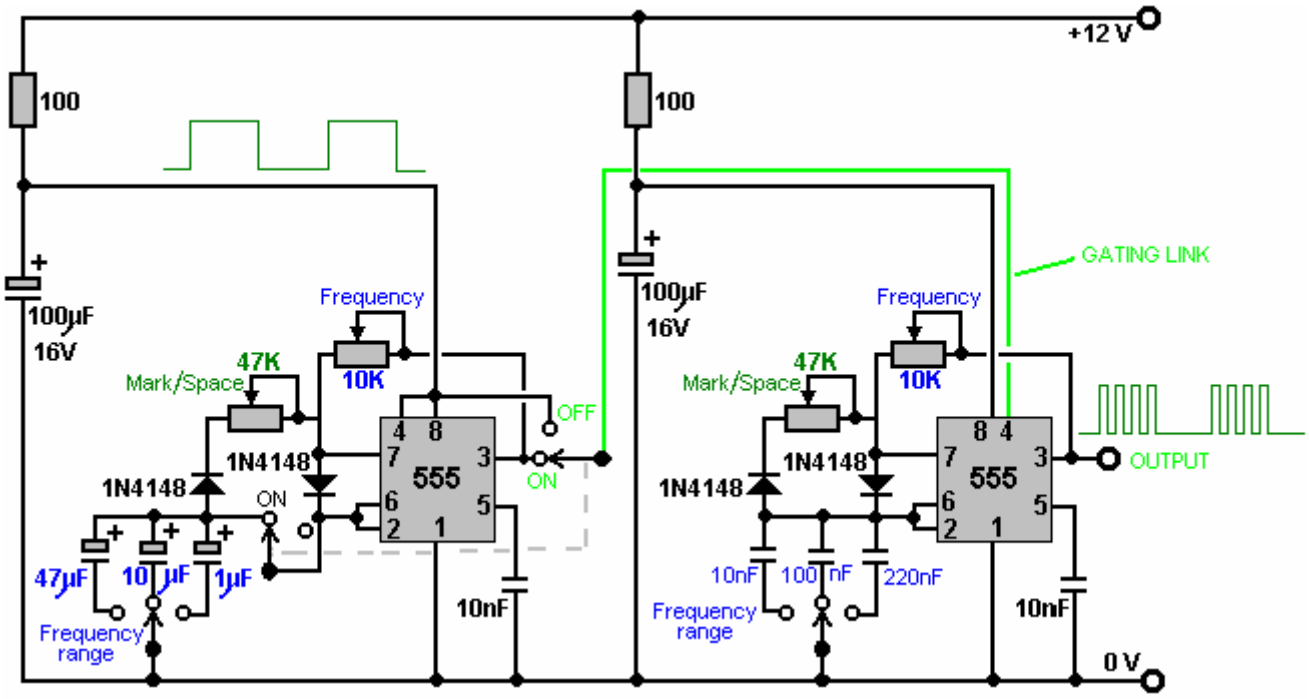

The final section of the circuit is the power drive for the electrolyser cell. This is a very simple circuit. Firstly, the output of the second 555 chip is lowered by a basic voltage-divider pair of resistors, and fed to the Gate of the output transistor:

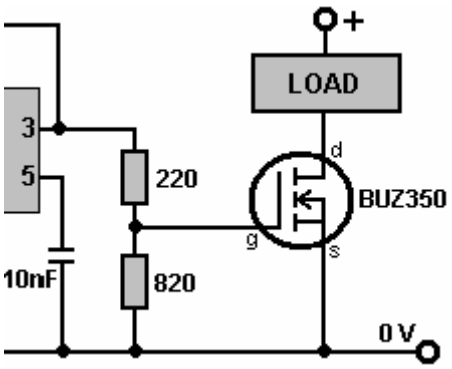

Here, the 555 chip output voltage is lowered by 220 / 820 or about 27%. When the voltage rises, it causes the BUZ350 transistor to switch on, short-circuiting between its Drain and Source connections and applying the whole of the 12-volt supply voltage across the load, which in our application, is the electrolyser cell:

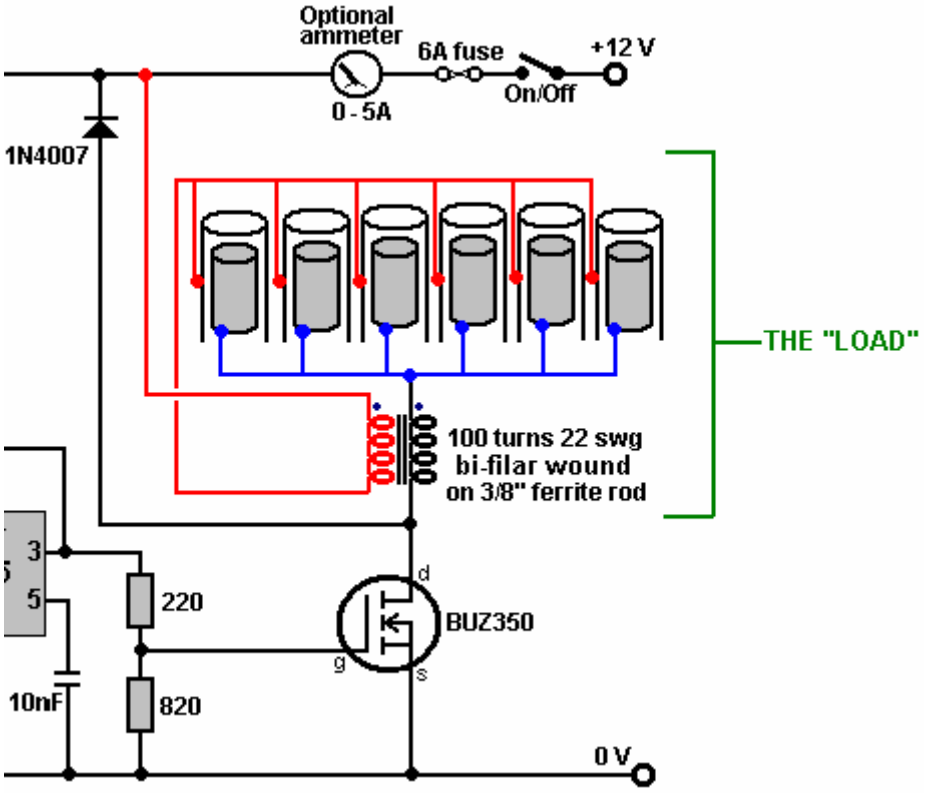

The transistor drives the electrolysis electrodes as shown above, applying very sharp, very short pulses to them. What is very important are the wire coils which are placed on each side of the electrode set. These coils are linked magnetically because they are wound together on a high-frequency ferrite rod core and although a coil is such a simple thing, these coils have a profound effect on how the circuit operates. Firstly, they convert the 555 chip pulse into a very sharp, very short, high-voltage pulse which can be as high as 1,200 volts. This pulse affects the local environment, causing extra energy to flow into the circuit. The coils now perform a second role by blocking that additional energy from short-circuiting through the battery, and causing it to flow through the electrolysis cell, splitting the water into a mix of hydrogen and oxygen, both gases being high-energy, highly charged atomic versions of those gases. This gives the mix some 400% the power of hydrogen being burned in air.

When the transistor switches off, the coils try to pull the transistor Drain connection down to a voltage well below the 0-volt battery line. To prevent this, a 1N4007 diode is connected across the cell and its coils. The diode is connected so that no current flows through it until the transistor Drain gets dragged down below the 0-volt line, but then that happens, the diode effectively gets turned over and as soon as 0.7 volts is placed across it, it starts to conduct heavily and collapses the negative voltage swing, protecting the transistor, and importantly, keeping the pulsed waveform restricted to positive DC pulses, which is essential for tapping this extra environmental energy which is what actually performs the electrolysis. You can easily tell that it is the environmental “cold” electricity which is doing the electrolysis as the cell stays cold even though it is putting out large volumes of gas. If the electrolysis were being done by conventional electricity, the cell temperature would rise during the electrolysis. A John Bedini pulser circuit can be used very effectively with a cell of this type and it adjusts automatically to the resonant frequency as the cell is part of the frequency-determining circuit.

The BUZ350 MOSFET has a current rating of 22 amps so it will run cool in this application. However, it is worth mounting it on an aluminium plate which will act as both the mounting and a heat sink but it should be realised that this circuit is a bench-testing circuit with a maximum current output of about 2 amps and it is **not** a **P**ulse-**W**idth **M**odulation circuit for a high-current DC electrolyser. The current draw in this arrangement is particularly interesting. With just one tube in place, the current draw is about one amp. When a second tube is added, the current increases by less than half an amp. When the third is added, the total current is under two amps. The fourth and fifth tubes add about 100 milliamps each and the sixth tube causes almost no increase in current at all. This suggests that the efficiency could be raised further by adding a large number of additional tubes, but this is actually not the case as the cell arrangement is important. Stan Meyer ran his VolksWagen car for four years on

the output from four of these cells with 16-inch (400 mm) electrodes, and Stan would have made a single larger cell had that been feasible.

Although the current is not particularly high, a five or six amp circuit-breaker, or fuse, should be placed between the power supply and the circuit, to protect against accidental short-circuits. If a unit like this is to be mounted in a vehicle, then it is **essential** that the power supply is arranged so that the electrolyser is disconnected if the engine is switched off. Passing the electrical power through a relay which is powered via the ignition switch is a good solution for this. It is also **vital** that at least one bubbler is placed between the electrolyser and the engine, to give some protection if the gas should get ignited by an engine malfunction.

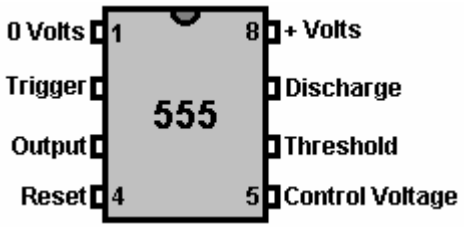

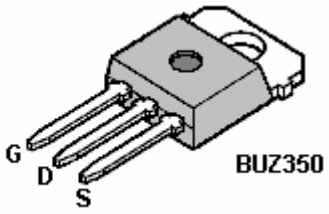

Although printed circuit boards have now been produced for this circuit and ready-made units are available commercially, you can build your own using stripboard if you want to. A possible one-off prototype style component layout for is shown here:

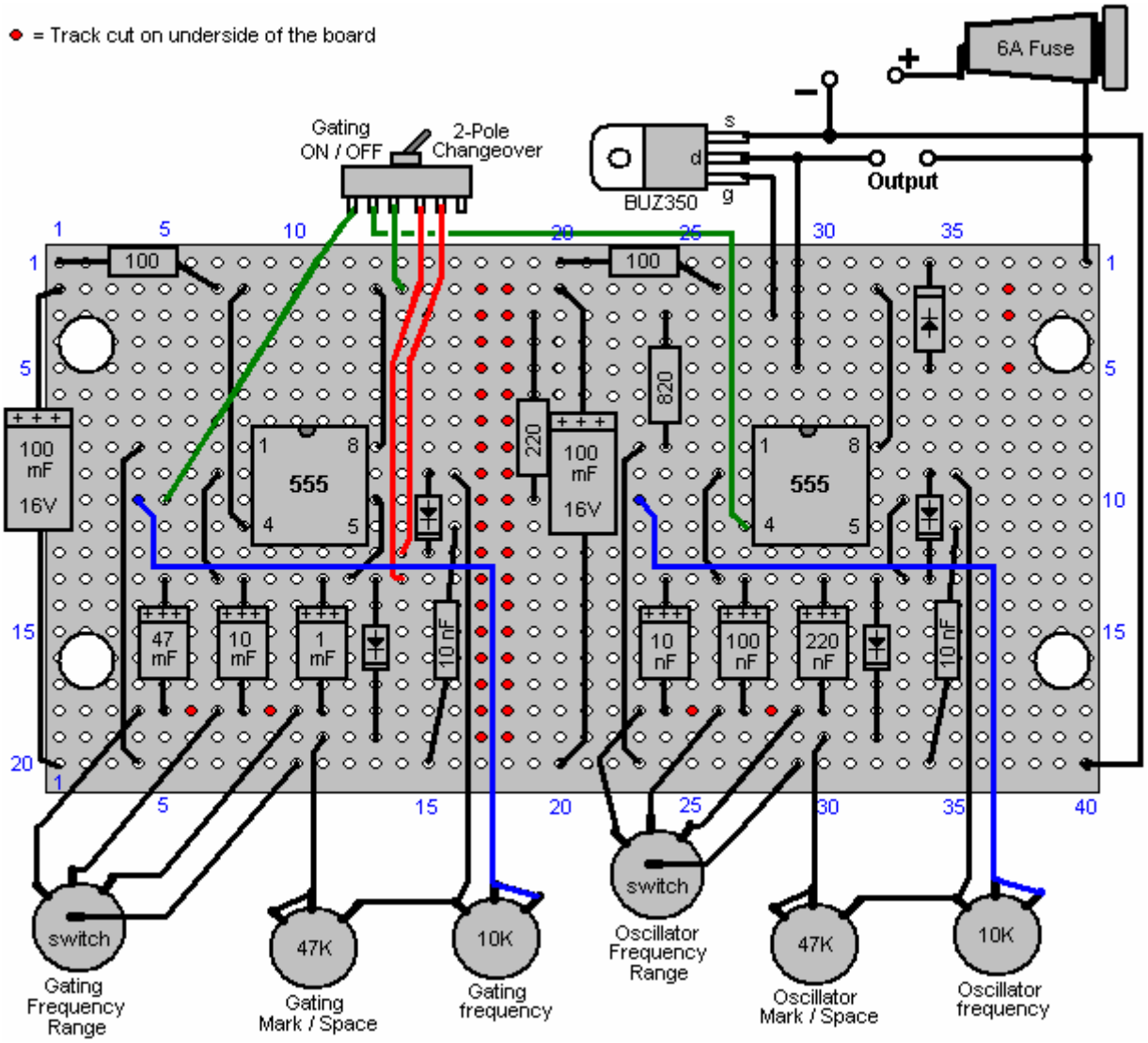

The underside of the strip-board (when turned over horizontally) is shown here:

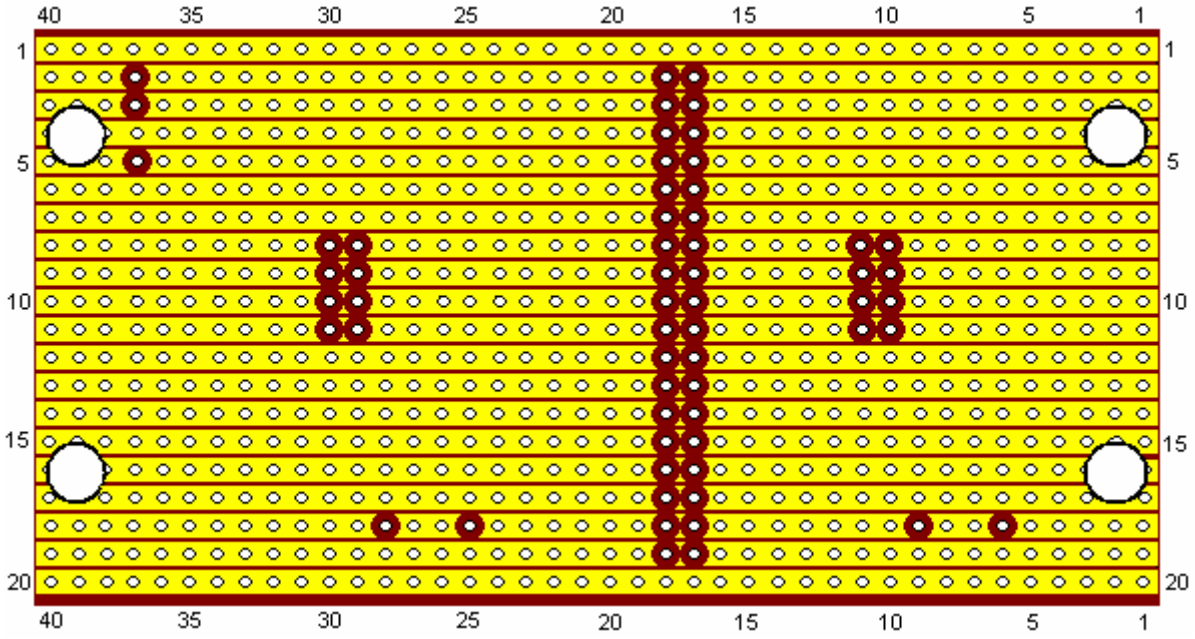



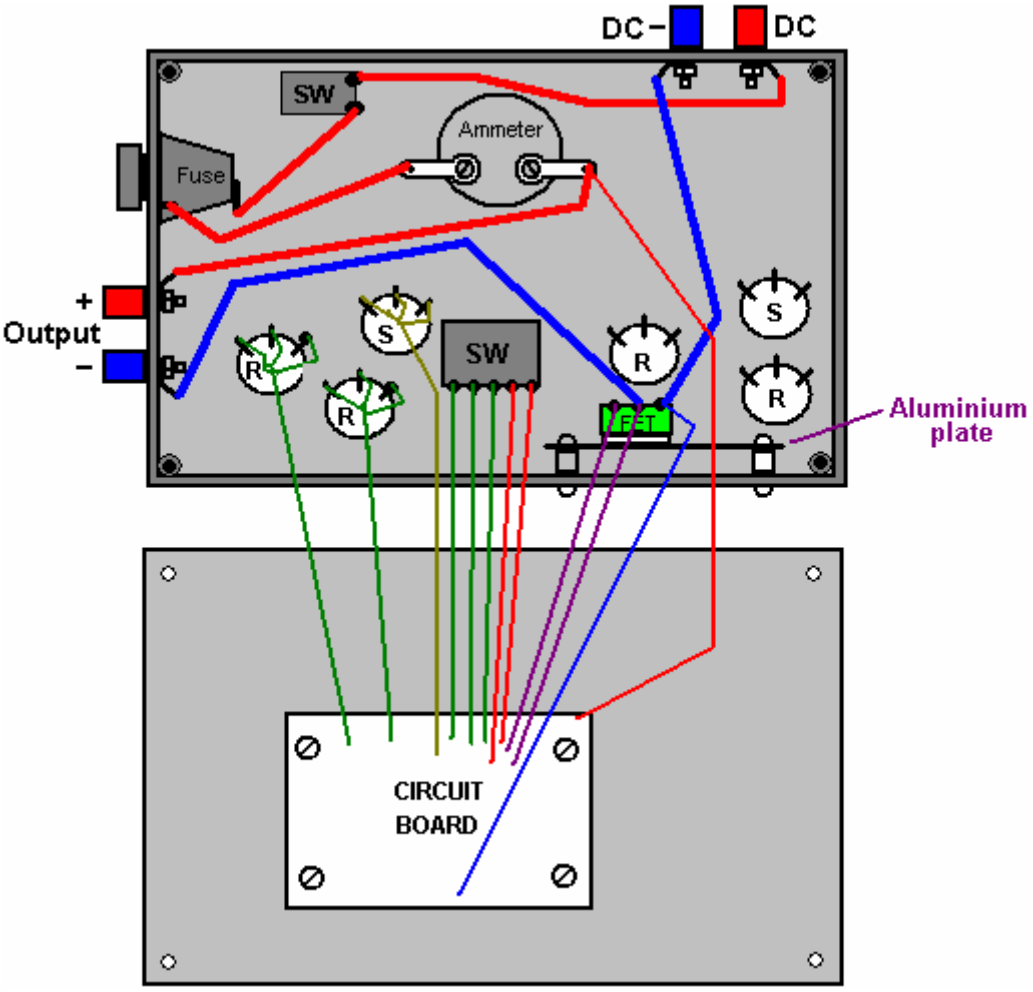

Although using a ferrite ring is probably the best possible option, the bi-filar coil can be wound on any straight ferrite rod of any diameter and length. You just tape the ends of two strands of wire to one end of the rod and then rotate the rod in your hands, guiding the strands into a neat side-by-side cylindrical winding as shown here:

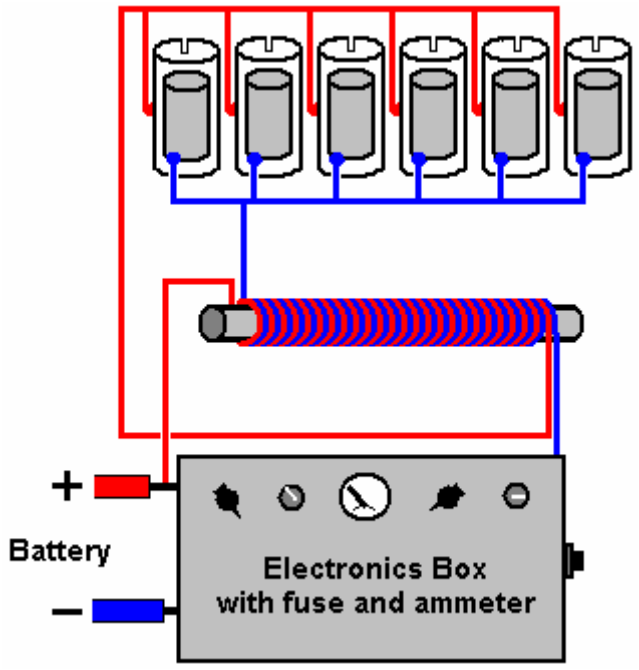

Component	Quantity	Description	Comment
100 ohm resistors 0.25 watt	2	Bands: Brown, Black, Brown	
220 ohm resistor 0.25 watt	1	Bands: Red, Red, Brown	
820 ohm resistor 0.25 watt	1	Bands: Gray, Red, Brown	
100 mF 16V capacitor	2	Electrolytic	
47mF 16V capacitor	1	Electrolytic	
10 mF 16V capacitor	1	Electrolytic	
1 mF 16 V capacitor	1	Electrolytic	
220 nF capacitor (0.22 mF)	1	Ceramic or polyester	
100 nF capacitor (0.1 mF)	1	Ceramic or polyester	
10 nF capacitor (0.01 mF)	3	Ceramic or polyester	
1N4148 diodes	4		
1N4007 diode	1		FET protection
NE555 timer chip	2		
BUZ350 MOSFET	1	Or any 200V 20A n-channel MOSFET	
47K variable resistors	2	Standard carbon track	Could be screw track
10K variable resistors	2	Standard carbon track	Could be screw track
4-pole, 3-way switches	2	Wafer type	Frequency range
1-pole changeover switch	1	Toggle type, possibly sub-miniature	Any style will do
1-pole 1-throw switch	1	Toggle type rated at 10 amps	Overall ON / OFF switch
Fuse holder	1	Enclosed type or a 6A circuit breaker	Short-circuit protection
Veroboard	1	20 strips, 40 holes, 0.1 inch matrix	Parallel copper strips
8-pin DIL IC sockets	2	Black plastic, high or low profile	Protects the 555 ICs
Wire terminals	4	Ideally two red and two black	Power lead connectors
Plastic box	1	Injection moulded with screw-down lid	
Mounting nuts, bolts and pillars	8	Hardware for 8 insulated pillar mounts	For board and heatsink
Aluminium sheet	1	About 4 inch x 2 inch	MOSFET heatsink
Rubber or plastic feet	4	Any small adhesive feet	Underside of case
Knobs for variable resistors etc.	6	1/4 inch shaft, large diameter	Marked skirt variety
Ammeter	1	Optional item, 0 to 5A or similar	
Ferrite rod 1-inch long or longer	1	For construction of the inductors	bi-filar wound
22 SWG (21 AWG) wire	1 reel	Enamelled copper wire, 2 oz. reel	
Sundry connecting wire	4 m	Various sizes	

As mentioned earlier, it is absolutely vital that every precaution be taken to avoid an explosion. The “hydroxy” gas produced by the electrolysis of water is mainly hydrogen gas and oxygen gas mixed together in the ideal proportions for them to recombine to form water again. That happens when the gasses are lit, and as the flame front of the ignition is about 1,000 times faster than the flame front when petroleum vapour is ignited, standard flash-back protection devices should not be relied on. The best protection device is a bubbler which is a simple container which feeds the gas up through a column of water.

It is also a good idea to use a pressure-activated switch which disconnects the power to the electronics if the gas pressure exceeds, say, five pounds per square inch, as shown here:

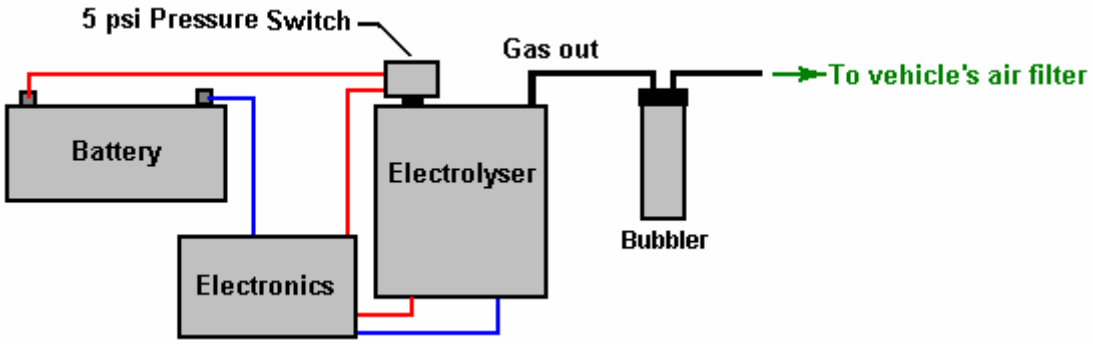

If it is intended to use the electrolyser to feed an internal combustion engine without the use of any other fuel, then the timing of the spark will need to be adjusted, and if the engine is very small and has a waste spark, then that needs to be dealt with as well. If the gas output is used to boost vehicle engine operation when the engine is running on its normal fuel, then no timing adjustment is normally needed, but if there is a computer controlled fuel injection system, then the oxygen sensor signal needs to be corrected for the improved fuel mix.

Dave, who built this replication, suggests various improvements. Firstly, Stan Meyer used a larger number of tubes of greater length. Both of those two factors should increase the gas production considerably. Secondly, careful examination of video of Stan's demonstrations shows that the outer tubes which he used had a rectangular slot cut in the top of each tube:

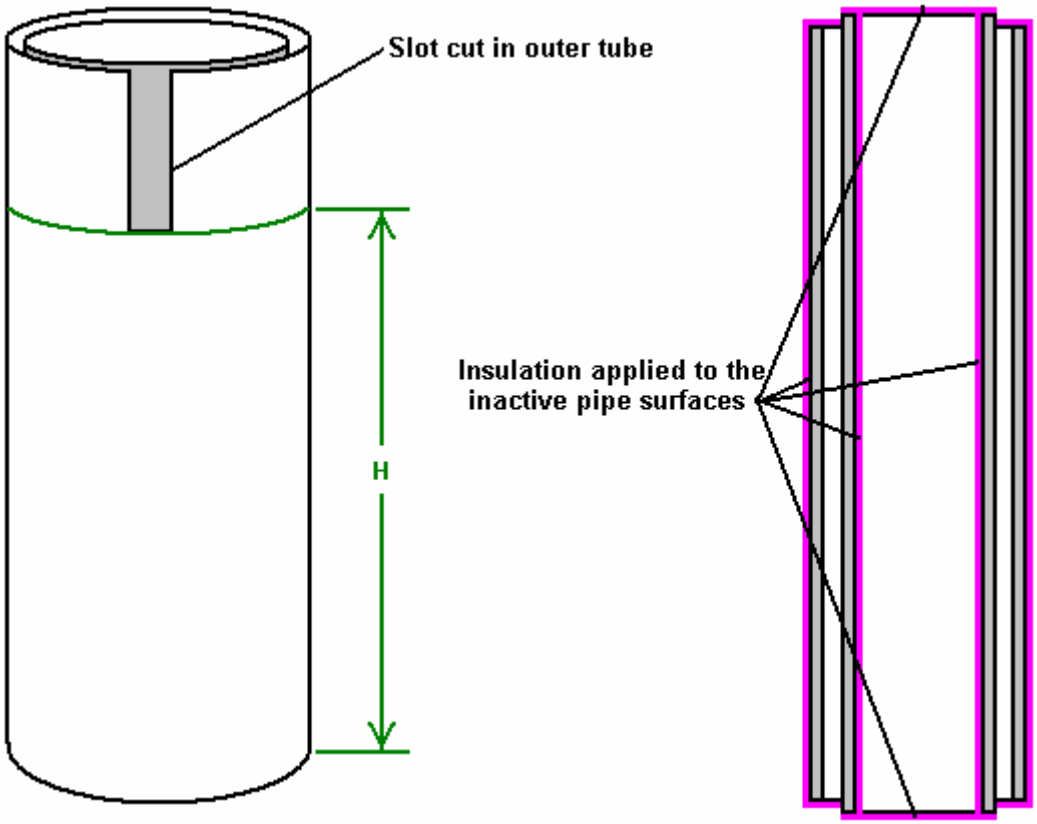

Some organ pipes are fine-tuned by cutting slots like this in the top of the pipe, to raise it's pitch, which is it's frequency of vibration. As they have a smaller diameter, the inner pipes in the Meyer cell will resonate at a higher frequency than the outer pipes. It therefore seems probable that the slots cut by Stan are to raise the resonant frequency of the larger pipes, to match the resonant frequency of the inner pipes. If you want to do that, hanging the inner tube up on a piece of thread and tapping it, will produce a sound at the resonant pitch of the pipe. Cutting a slot in one outer pipe, suspending it on a piece of thread and tapping it, will allow the pitch of the two pipes to be compared. When one outer pipe has been matched to your satisfaction, then a slot of exactly the same dimensions will bring the other outer pipes to the same resonant pitch. It has not been proved, but it has been suggested that only the part of the outer pipe which is below the slot, actually contributes to the resonant frequency of the pipe. That is the part marked as "H" in the diagram above. It is also suggested that the pipes will resonate at the same frequency if the area of the inside face of the outer pipe ("H" x the inner circumference) exactly matches the area of the outer surface of the inner pipe. It should be remembered that as all of the pipe pairs will be resonated with a single signal, that each pipe pair needs to resonate at the same frequency as all the other pipe pairs.

It is said that Stan ran his VolksWagen car for four years, using just the gas from four of these units which had pipe pairs 16-inchs long. A very important part of the cell build is the conditioning of the electrode tubes, using tap water. Ravi in India suggests that this is done as follows:

1. Do not use any resistance on the negative side of the power supply when conditioning the pipes.
2. Start at 0.5 Amps on the signal generator and after 25 minutes, switch off for 30 minutes
3. Then apply 1.0 Amps for 20 minutes and then stop for 30 minutes.
4. Then apply 1.5 Amps for 15 minutes and then stop for 20 minutes.
5. Then apply 2.0 Amps for 10 minutes and afterwards stop for 20 minutes.
6. Go to 2.5 Amps for 5 minutes and stop for 15 minutes.
7. Go to 3.0 Amps for 120 to 150 seconds. You need to check if the cell is getting hot...if it is you need to reduce the time.

After the seven steps above, let the cell stand for at least an hour before you start all over again.

You will see hardly any gas generation in the early stages of this conditioning process, but a lot of brown muck will be generated. Initially, change the water after every cycle, but **do not** touch the tubes with bare hands. If the ends of the tubes need to have muck cleaned off them, then use a brush but do not touch the electrodes!! If the brown muck is left in the water during the next cycle, it causes the water to heat up and you need to avoid this.

Over a period of time, there is a reduction in the amount of the brown stuff produced and at some point, the pipes won't make any brown stuff at all. You will be getting very good gas generation by now. A whitish powdery coat of chromium oxide dielectric will have developed on the surfaces of the electrodes. Never touch the pipes with bare hands once this helpful coating has developed.

Important: Do the conditioning in a well-ventilated area, or alternatively, close the top of the cell and vent the gas out into the open. During this process, the cell is left on for quite some time, so even a very low rate of gas production can accumulate a serious amount of gas which would be a hazard if left to collect indoors.

Further Developments

When producing hydroxy gas from water, it is not possible to exceed the Faraday maximum unless additional energy is being drawn in from the surrounding environment. As this cell runs cold and has substantial gas output, there is every indication that when it is running, it is drawing in this extra energy.

This idea is supported by the fact that one of the key methods of tapping this extra energy is by producing a train of very sharply rising and sharply falling electrical pulses. This is exactly the objective of Dave's circuit, so it would not be too surprising if that effect were happening.

The additional energy being accessed is sometimes referred to as "cold" electricity, which has very different characteristics to normal conventional electricity. Where normal electrical losses cause local heating as a by-product, "cold" electricity has exactly the opposite effect, and where a normal electrical loss would take place, an extra inflow of useful "cold" energy enters the circuit from outside. This flow causes the temperature of the circuitry to drop, instead of increase, which is why it is called "cold" electricity.

This remarkable occurrence has the most unusual effect of actually reducing the amount of conventional power needed to drive the circuit, if the output load is increased. So, increasing the load powered by the circuit causes additional energy to flow in from the environment, powering the extra load and as well, helping to drive the original circuit. This seems very strange, but then, "cold" electricity operates in an entirely different way to our familiar conventional electricity, and it has its own set of unfamiliar rules, which are generally the reverse of what we are used to.

To test his cell system further, Dave connected an extra load across the electrodes of his cell. As the inductors connected each side of the cell generate very high-value, sharp voltage spikes, Dave connected two large value capacitors (83,000 microfarad, 50-volt) across the cell as well. The load was a 10-watt light bulb which shines brightly, and interestingly, the current draw of the circuit goes down rather than up, in spite of the extra output power. The gas production rate appears undiminished.

This is the alteration to that part of the circuit which was used:

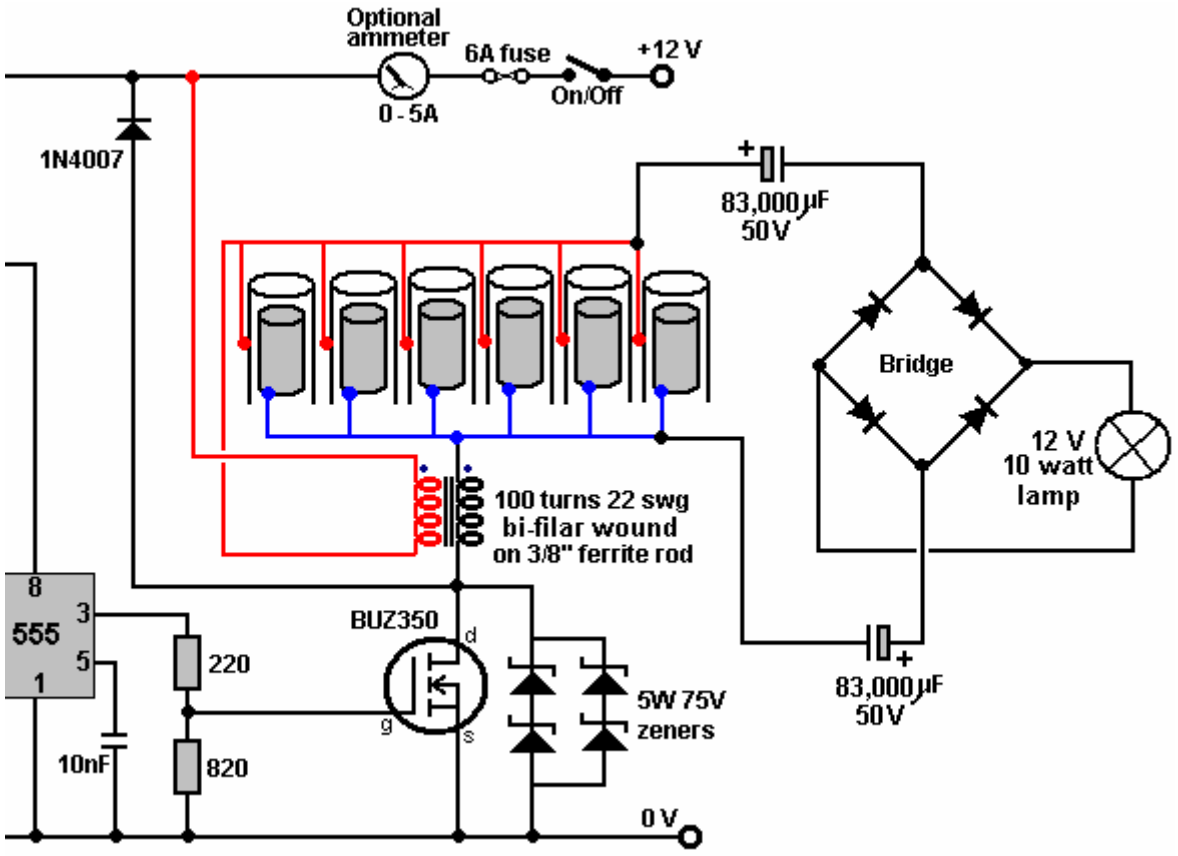

It has also been suggested that if a BUZ350 can't be obtained, then it would be advisable to protect the output FET against damage caused by accidental short-circuiting of wires, etc., by connecting what is effectively a 150-volt, 10 watt zener diode across it as shown in the above diagram. While this is not necessary for the correct operation of the circuit, it is helpful in cases where accidents occur during repeated testing and modification of the cell components.

Dr Scott Cramton. Dr. Cramton and his team of Laesa Research and Development scientists have been investigating and advancing this technology and has reached an output of six litres per minute for an electrical input of 12 (1 amp at 12 volts). In addition, Dr. Cramton's cell has stable frequency operation and is being run on local well water. The objective is to reduce the amount of diesel fuel needed to run a large capacity standard electrical generator.

The style of design is similar to Stan Meyer's original physical construction although the dimensions are slightly different. The cell body is transparent acrylic tube with end caps top and bottom. Inside the tube are nine pairs of pipes, electrically connected as three sets of three interspersed pipe pairs. These are driven by a three-phase pulsed supply based on a replication of Stan Meyer's original cell. It consists of a Delco Remy alternator driven by a 1.5 horsepower 220 volt (50 Hz) AC motor. This arrangement is, as was Stan Meyer's, for demonstration purposes. In a working application, the alternator is driven by the engine being supplied with the hydroxy gas. The 120 degree phase separation is the critical component for maintaining the resonant frequency. It should be noted that the alternator must maintain a rate of 3,600 rpm while under load.

It needs to be stressed that Dr. Cramton's cell is very close in construction principles to Dave Lawton's cell and the quality of construction is very important indeed. The first and foremost point which can be easily missed is the absolutely essential tuning of all of the pipes to a single, common frequency. This is the equivalent of tuning a musical instrument and without that tuning, the essential resonant operation of the cell will not be achieved and the cell performance will not be anything like the results which Dr. Cramton and his team are getting.

Dr. Cramton is using 316L-grade stainless steel pipes 18 inches (450 mm) long. The outer pipes are 0.75 inches in diameter and the inner pipes 0.5 inches in diameter. This gives an inter-pipe gap of 1.2 mm. The first step is to get the pipes resonating together. First, the frequency of an inner pipe is measured. For this, a free internet frequency-analyzer program was downloaded and used with the audio card of a PC to give a measured display of the resonant frequency of each pipe. The download location was
http://www.softpedia.com/get/Multimedia/Audio/Other-AUDIO-Tools/Spectrum-Analyzer-pro-Live.shtml

The method for doing this is very important and considerable care is needed for this. The quarter-inch stainless steel bolt is pressed into the inner pipe where it forms a tight push-fit. It is very important that the head of each

nut is pressed in for **exactly** the same distance as this alters the resonant frequency of the inner pipe. The steel connecting strip is then bent into its Z shape and securely clamped to the bolt with a stainless steel nut. The assembly of pipe, steel strip, nut and bolt is then hung up on a thread and tapped gently with a piece of wood and its resonant frequency measured with the frequency analyzer program. The frequency is fed into the program using a microphone. All of the inner pipes are tuned to exactly the same frequency by a very slight alteration of the insertion length of the bolt head for any pipe with a resonant frequency which is slightly off the frequency of the other pipes in the set of nine inner pipes.

Next, the outer tubes are slotted to raise their resonant frequency to match that of the inner pipes. Their frequency is also measured by hanging them up and tapping them gently with a piece of wood. If the frequency needs additional raising, then the tube length is reduced by a quarter of an inch (6 mm) and the testing continued as before. Adjusting the width and length of the slot is the best method for adjusting the resonant frequency of the tube. A small file can be used to increase the slot dimensions. This procedure is time consuming and tedious but it is well worth the effort. The average finished length of the outer pipes is 17.5 inches (445 mm) and the slot dimensions 0.75 inch long and 0.5 inch wide (19 mm x 13 mm). The pipe arrangement is shown here:

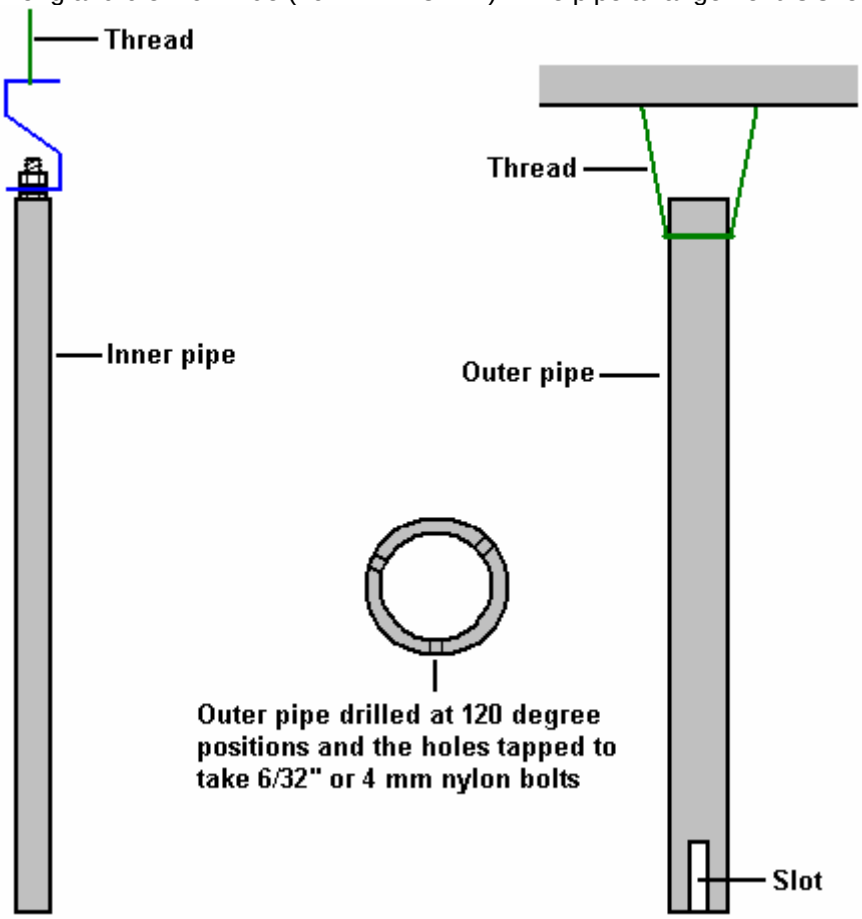

The outer pipes are drilled and tapped to take either a 6/32” nylon bolt available from Ace hardware stores in the USA, or alternatively, drilled and tapped to take a 4 mm nylon bolt. Three of these bolt holes are evenly spaced around the circumference of each end of all of the outer pipes.

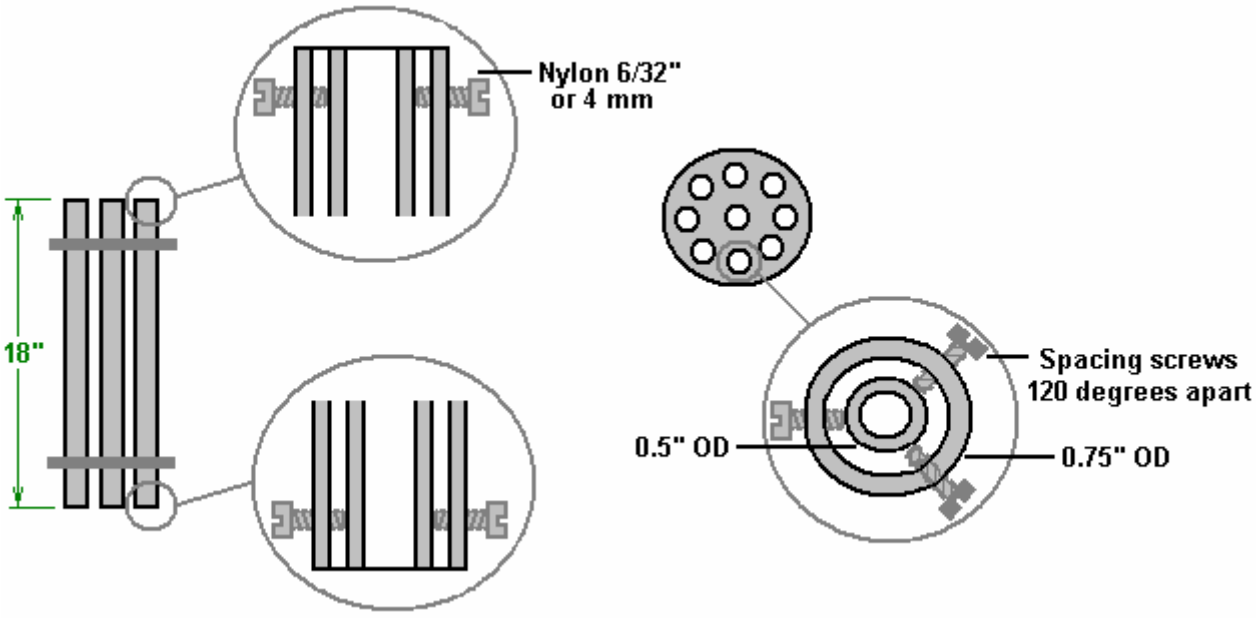

These nylon bolts are used to adjust and hold the inner pipe **gently** in the exact centre of the outer pipe. It is very important that these bolts are not over tightened as that would hinder the vibrations of the inner pipe. The bolts are adjusted so that a feeler gauge shows that there is exactly the same 1.2 mm gap all round, both top and bottom. The weight of the inner pipe is carried by a 3/4 inch (18 mm) wide strip of stainless steel bent into a Z-shape, and **none** of the weight is carried by the nylon bolts. The arrangement is shown here:

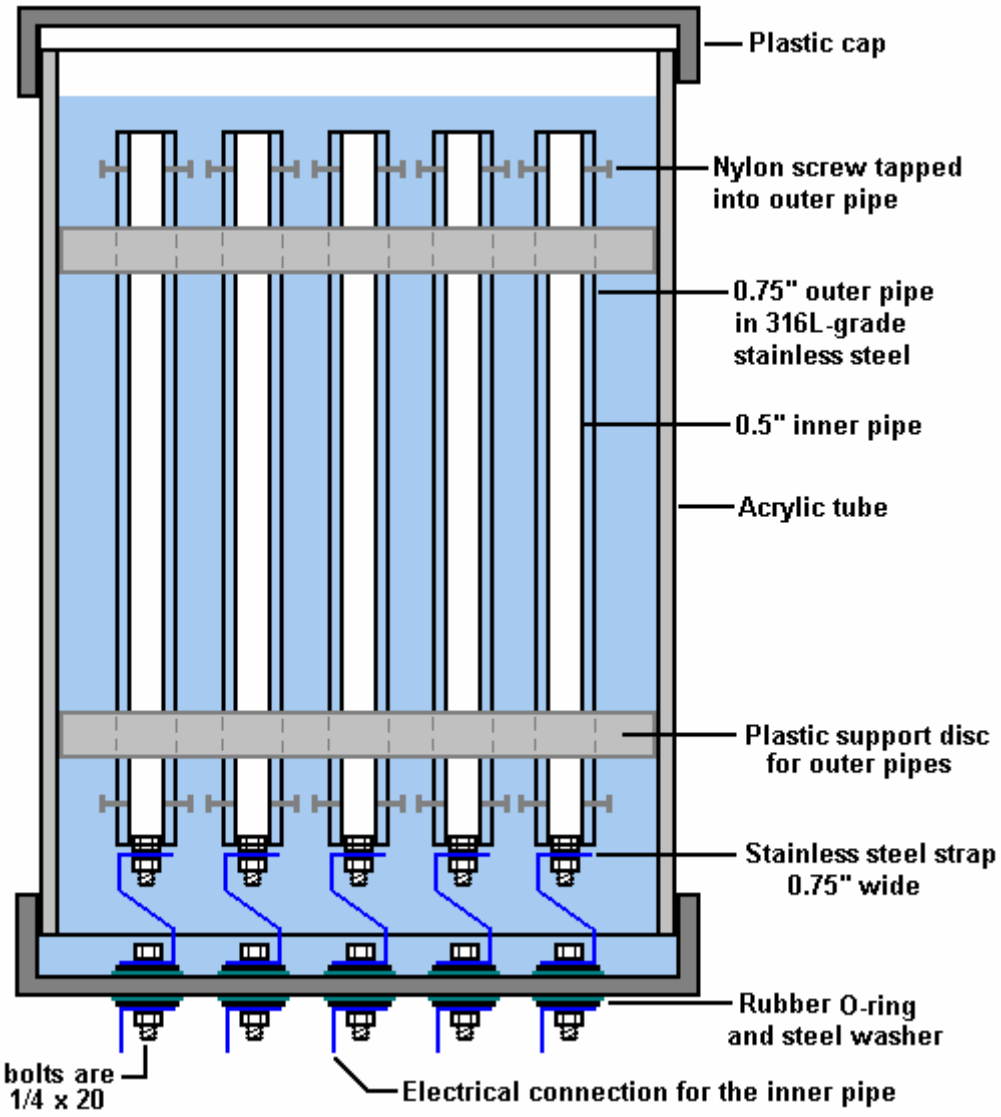

The supporting springy strip of steel is shown in blue in the above diagram as it also forms the electrical connection for the inner tubes. The outer tubes are held securely in position by two plastic discs which form a tight push-fit inside the 6” (150 mm) diameter acrylic tube which forms the body of the cell. The cell is sealed off with plastic caps (ideally, the upper one being screw threaded for easy maintenance) and the electrical connections are carried through the lower cap using 1/4” (6 mm) x 20 stainless steel bolts. The bolts are sealed using washers and rubber O-rings on both sides of the cap.

For clarity, the diagram above shows only the electrical connections for the inner pipes. The electrical connections for the outer pipes are shown in the following diagram. The connections are made at both the top and the bottom of each outer pipe by attaching a stainless steel hose clamp with a stainless steel bolt welded to each clamp. The wiring is then carried across inside the cell so that all six connection points for each set of three pipes are carried out through the base of the cell with just one bolt, again, sealed with washers and rubber O-rings. The nine pipe pairs are electrically connected in three sets of three, and each set is fed with a separate phase of a 3-phase waveform. This sets up an interaction through the water and produces a complex pulsing waveform with each set of pipes interacting with the other two sets. The sets are arranged so that the individual pipes of each set are interspersed with the pipes of the other two sets, making the sets overlap each other as shown in this diagram:

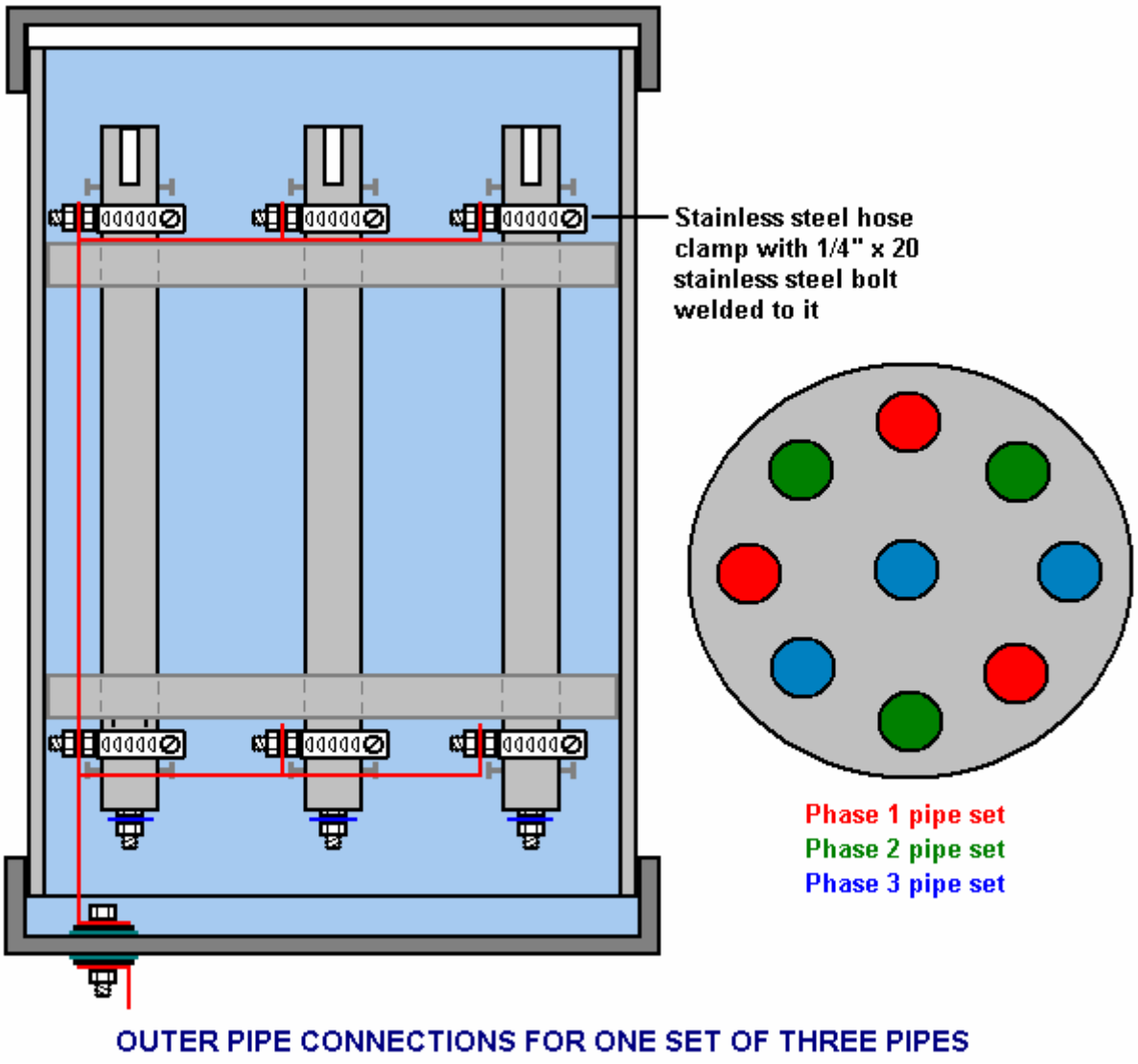

OUTER PIPE CONNECTIONS FOR ONE SET OF THREE PIPES

For clarity, the diagram above does not show the electrical connections for the inner pipes and it omits the pipes of the other two groups of three, the water-level sensor, the gas take off pipe and the gas-pressure sensor.

At this time, Dr. Cramton is driving the pipe arrays with the circuit shown below. It uses an AC sinewave generated by a pulsed alternator. The current fed to the motor driving the alternator accounts for about 24 watts of power while the current drive to the alternator winding is just 12 watts. It should be realised that the alternator can easily drive many cells, probably without any increase in power required. Dr. Cramton is investigating methods of producing the same waveform without the need for an alternator and while that would be useful, it should be realised that a gas output of six litres per minute for a power input of only 36 watts is a very significant result. It has proven possible to power a 5.5 kilowatt electrical generator on hydroxy gas alone with a flow rate well below this 6 lpm, and obviously, the 36 watts can very easily be provided from that 5.5 kilowatt output.

It is absolutely essential that the pipe pairs are “conditioned” as there will be very little gas production until the white conditioning layer is built up on the active surfaces of the pipes. As has already been described, one method is by powering the cell up for a few minutes, and then letting it rest unused for a time before repeating the process. Dr. Cramton emphasises that at least a hundred hours of conditioning will be needed before the gas output volume starts to rise, and it will be three months before the white layer reaches its full thickness.

This is the circuit presently being used. You will notice that an additional pole has been added to the Gating On/Off switch so that the timing components are switched out. This gives added protection for the Gating 555 chip in the circuit, preventing overheating when it is running but not being used. The frequency used with Dr. Cramton’s cell is 4.73 kHz although this is not the optimum frequency for the cell. The alternator imposes a certain limitation on the highest possible frequency, but the frequency used has been shown to be the most effective and it is a harmonic of the optimum frequency. This is a bit like pushing a child on a swing and only pushing every third or fourth swing – it works quite well.

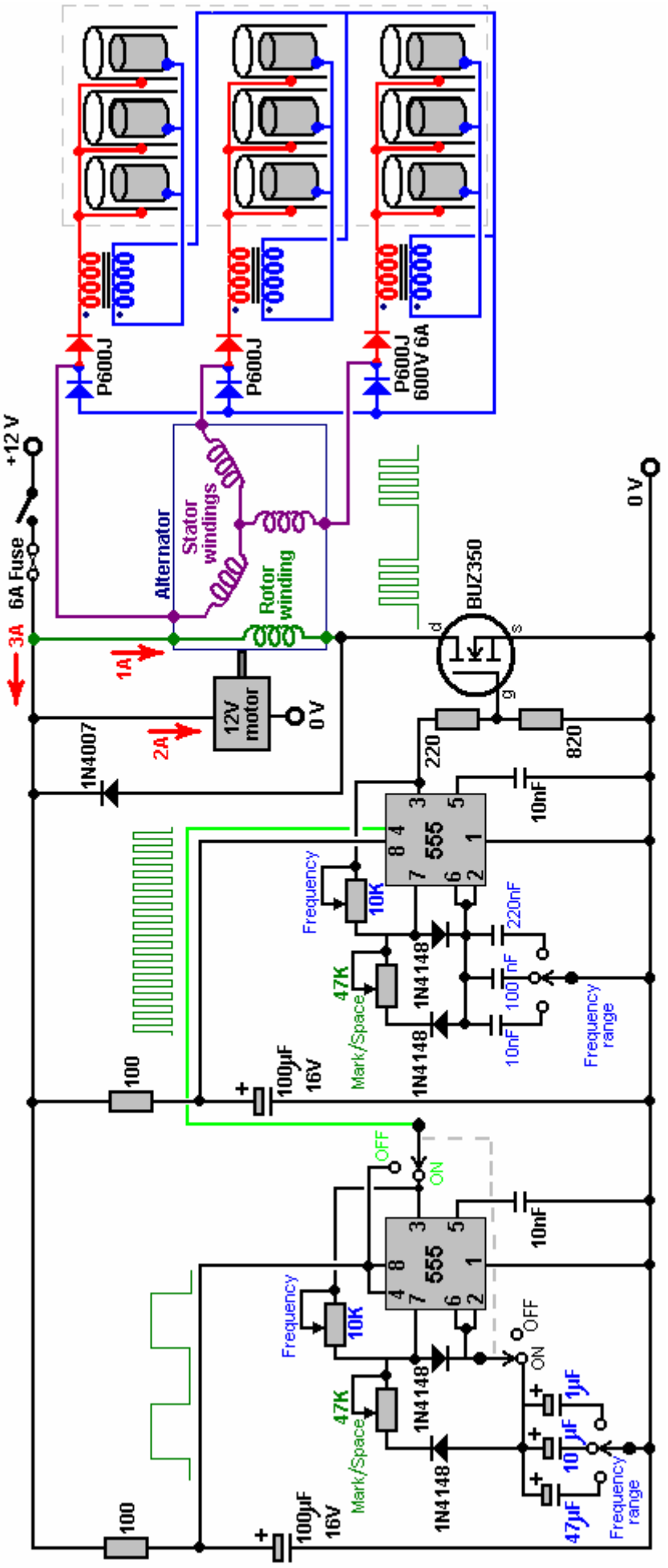
P600J
P600J
P600J
600V 6A
+12 V
6A Fuse
3A
Alternator
Stator windings
Rotor winding
1A
2A
12V motor
0 V
1N4007
BUZ350
d
g
s
0 V
220
820
10nF
555
Frequency
10K
47K
Mark/Space
1N4148
1N4148
220nF
100nF
10nF
Frequency range
100
100µF 16V
OFF
ON
10nF
555
Frequency
10K
47K
Mark/Space
1N4148
1N4148
OFF
ON
1µF
10µF
47µF
Frequency range
100
100µF 16V

Dr. Cramton says: “I would like people to know is that the scientific community is working on these projects and this technology is now a fact of science and not conjecture”.

Tad Johnson. Tad has managed to replicate Stan Meyer’s Water Fuel System fully. He says: “In 1996 I was an amateur electronics hobbyist. I had been interested in electrolysis and hydrogen study for many years prior to that, but that year I was watching the sci.hydrogen news group to become more educated on hydrogen in general. During that year I met John, a man who was good friends with Stanley Meyer, and who regularly went to visit him in Ohio. John lived here in California, and he had also invested some money in the Water Fuel cell project of Meyers'. I became friends with John and became more interested in the Stanley Meyer system. As I became more adept at electronic design and troubleshooting I began to want to try to duplicate the Stanley Meyer process of breaking water with high voltage and resonance.

During that year and a couple of following years, I was able to ask John questions which he would then ask Stanley, and feed the answer back to me. You see, Stan was not willing to talk to just anyone about the process let alone give away any secrets of the process that were not already mentioned in the patents. So I had to ask these questions through John who was good friends with Stanley.

My first few circuits worked but the cell would not make any hydrogen, especially under the conditions that Stanley and his patents said they would. The problem is that I would tune the cell like he said and yet no gas would be produced. It took three years of tinkering to finally figure out what I was doing wrong, and it was a big blunder. The answer to what I was doing wrong came to me through the sci.hydrogen group from a man who lived in Sweden and who had already duplicated the Meyer experiments based on his patents. His name is Ted Zettergren, an inventor who helped other inventors file patents and market products. He posted exactly what he did and how the system worked. To my knowledge he was the first of only three people who duplicated the Meyer experiments successfully.

After Stan was killed I had no information other than Ted's to go by, but that was all I, or anyone else, needs to duplicate the Meyers' process. The process is achieved by using the following:

1. A pulsing circuit or power supply capable of producing 600+ Volts at 20 kHz at 100 microamps or more. My system was a simple, off-the-shelf, inverter with an input of 12 volts DC and an output of 1,200 volts AC at 20 kHz at 1mA. I then took this circuit and modified it to run at 42.5 – 43.0 kHz. This was an off-the-shelf inverter sold by Fry’s electronics. It is a neon power supply with a very small bobbin core transformer. Anyone can buy this circuit or one just like it and modify it to run within these specs. The hard part is obtaining resonance which takes years of electronics expertise to do.

2. A small electrolysis cell with the ability to vary distance between conductors.

3. Two chokes, one adjustable and one fixed.

4. One high voltage diode to go in-line with the cathode of the power supply output.

5. An Inductance Meter, a Capacitance Meter, a Frequency Counter/Oscilloscope, and High Voltage Probe.

The key to the Meyer process is resonance, and without resonance the system produces no gas. At an input power of just 1.2 watts you can see why no gas will be produced without resonance. This is a standard LC (inductor/capacitor) resonant circuit in which you **MUST** (!) match Capacitive Reactance with Inductive Reactance. This then creates an LC resonant circuit in which the two legs of the power supply match exactly in frequency.

Radio Amateur experience makes the calculation of resonance easy once you know the capacitance of the cell and the frequency you are driving it at. Once you have your inductance calculated you then buy the proper chokes that fall within the inductance range needed. The adjustable one needs (obviously) to be tuneable within a small range, so that when the cell temperature changes and causes the capacitance of the cell to change, then the inductance can also be changed to keep the cell in resonance. If your cell has the ability to vary distance between the electrodes, then you simply change that distance which changes the capacitance of the cell rather than changing the inductance. You must vary one or the other though. I have found since then, that the capacitance of the cell can be changed and works just as well as the inductors being adjusted. You don't use **ANY** electrolyte, you don't want **ANY** amperage at all, you want to use only Voltage and Resonance. **REPEAT, YOU DON'T NEED ANY CURRENT FLOW, ONLY VOLTAGE!**

What I found frustrating is that the cell temperature would change and the system would stop making gas. In order to keep the system making gas you constantly have to keep the cell in resonance, and thus you really need the system to be controlled by a processor, that constantly checks frequency on both legs and then adjusts

inductance to keep the cell in resonance. This is why Stanley moved to the other patents where the spark plug type of electrolysis chamber was used instead of a large cell.

Also, with the cell running at 1,200 Volts at 1mA and 42.8 kHz I found that I could make 200 lph (3.33 lpm) of gas. Do the math and you will find that this is impossible given our current understanding of electrolysis. If you scale that up in a linear fashion, you will find that you can make over 20,000 lph (333 lpm) of gas with just 120 Watts of input power. This is easily enough to run almost any Internal Combustion engine. The only problem is keeping the cell in tune.

An alternator can easily produce 3,000 watts of power, so this is easily enough to power the car on this system alone. This is how Stanley's Volkswagen Buggy was running around on water only. The car has to wait a minute or two before he stored enough gas to run the car, then once it was started and running it would make enough gas to run the car at up to 60 mph. I personally, never saw this car run, but I have two people that went to two showings and both said it worked and they verified there was no gasoline on board.

Three years ago, I sent this experimental data to Stefan and others and never heard back from anyone, nor did anyone ever repeat my experiment. To this date, I know of only Ted, Me, and one other person who has duplicated this experiment and done so successfully. The third person is a PHD on the east coast of the U.S. who is in contact with Stanley's widow. Stanley's brother now takes care of all water fuel cell business and claims he will start it up again and make sure it makes it to market this time. But I have not heard from them in years now. Stefan easily has the electronics experience to duplicate this process and also solve the issue of keeping the cell in resonance. I probably do as well at this point but I am not going to do it alone. It takes a lot of electronics expertise and hard work to solve this problem of cell tuning."

Tad has not been able to scale his implementation up to give outputs greater than the 3 lpm which he has achieved.

Patrick Kelly
engpjk@yahoo.co.uk
http://www.free-energy-info.com
http://www.FuelCostCutting.com