Hydrogen

Peter Häussinger, Linde AG Werksgruppe TVT München, Höllriegelskreuth, Federal Republic of Germany
Reiner Lohmüller, Fachhochschule Ostfriesland, Emden, Federal Republic of Germany
Allan M. Watson, Linde AG München, Höllriegelskreuth, Federal Republic of Germany

1. History . . . 2
2. Properties . . . 3
2.1. Physical Properties . . . 3
2.1.1. General Physical Data . . . 3
2.1.2. Solubilities, Diffusion Properties and Evaporation Equilibria . . . 7
2.2. Chemical Properties . . . 10
2.3. Ignition and Detonation Performance . . . 12
2.4. Isotopes . . . 13
3. Occurence . . . 15
4. Production . . . 15
4.1. Production from Coal and Hydrocarbons . . . 17
4.1.1. Coke Oven Gas . . . 18
4.1.2. Gasification of Coal and Hydrocarbons . . . 20
4.1.2.1. Coal Gasification . . . 20
4.1.2.2. Gasification of Liquid and Gaseous Hydrocarbons . . . 21
4.1.2.3. Examples of Industrial Scale Hydrogen Production (by Partial Oxidation of Hydrocarbons) . . . 24
4.1.3. Catalytic Reforming of Hydrocarbons . . . 24
4.1.3.1. Feedstocks . . . 24
4.1.3.2. Tubular Reformer . . . 25
4.1.3.3. Steam Reforming Plant . . . 32
4.1.3.4. Special Designs . . . 33
4.1.3.5. Autothermal Reactors . . . 35
4.1.4. Refinery Processes . . . 35
4.1.5. Petrochemical Processes . . . 38
4.2. Electrolysis . . . 39
4.2.1. Principles . . . 39
4.2.2. Conventional Water Electrolysis . . . 42
4.2.3. New Developments in Electrolytic Processes . . . 46
4.2.4. Hydrogen as Byproduct from other Electrochemical Processes . . . 49
4.3. Thermochemical Water Cleavage 50
4.3.1. Thermodynamics of Closed Cycles 51
4.3.2. Further Criteria of Thermochemical Cycles . . . 51
4.3.3. Thermochemical Cyclic Processes . 53
4.3.4. Hybrid Cycle Processes . . . 55
4.4. Other Methods for the Cleavage of Water . . . 56
4.4.1. Thermolytic and Radiolytic Processes . . . 57
4.4.2. Photochemical or Photoelectrical Water Cleavage . . . 58
4.4.3. Hydrogen Formation in Biological Systems . . . 61
4.5. Other Chemical Processes . . . 62
4.5.1. Hydrogen from Conversion of Metals . . . 62
4.5.2. Hydrogen from Ammonia . . . 64
4.5.3. Hydrogen from Methanol . . . 65
4.5.4. Hydrogen from Hydrogen Sulfide . 65
4.5.5. Hydrogen as Byproduct . . . 67
4.6. Economic Aspects . . . 67
4.6.1. Analysis of the Cost Structure . . . 67
4.6.2. Prognosis of the Hydrogen Costs . . 69
5. Purification of Hydrogen . . . 70
5.1. Low-Temperature Processes . . . 70
5.1.1. Condensation Processes . . . 71
5.1.2. Condensation and Rectification . . . 72
5.1.3. Low-Temperature Absorption Processes . . . 75
5.2. Adsorption Processes . . . 76
5.2.1. Principles . . . 76
5.2.2. Thermally Regenerated Adsorbers . 78
5.2.3. Pressure-Swing Adsorption (PSA) . 79
5.3. Catalytic Gas Purification . . . 82
5.3.1. Carbon Monoxide Removal . . . 83
5.3.2. Methanation . . . 84
5.3.3. Selective Oxidation . . . 85
5.3.4. Catalytic Removal of Sulfur Compounds . . . 85
5.3.5. Removal of Oxygen . . . 86
5.3.6. Removal of Nitrogen Oxides . . . 86
5.4. Scrubbing Processes . . . 86
5.4.1. Principles . . . 86
5.4.2. Physical Scrubbing (Rectisol Process) . . . 88
5.4.3. Chemical Scrubbing Processes . . . 88

© 2007 Wiley-VCH Verlag GmbH & Co. KGaA, Weinheim
10.1002/14356007.a13_297

5.5. Permeation Processes 90
5.5.1. Metal Membrane Techniques 90
5.5.2. Polymer Membrane Processes . . . 91
6. Liquefaction of Hydrogen 93
6.1. Principles of Hydrogen Liquefaction 94
6.2. Liquefaction Plants 95
6.3. Further Developments 97
7. Handling of Hydrogen 98
7.1. Quality Specifications 98
7.2. Compression and Expansion . . . 98
7.3. Transportation and Distribution . 100
7.4. Storage 101
7.5. Materials 103
7.6. Removal of Hydrogen 105
7.7. Safety Aspects 106
7.8. Toxicology 107
7.9. Analysis 108
8. Conventional Uses 108
8.1. Hydrogen in the Chemical Industry 108
8.1.1. Ammonia Synthesis 109
8.1.2. Hydrogen in Refinery Processes . . 110
8.1.3. Hydrogen in Coal Refinement . . . 111
8.1.4. Synthesis Gas 113
8.1.5. Hydrogen in Organic Synthesis . . . 115
8.1.6. Hydrogen in Inorganic Synthesis . . 116
8.2. Hydrogen in Metallurgy 116
8.3. Other Uses 119
9. Hydrogen Energy 120
9.1. Aims of the Hydrogen Energy Economy 120
9.2. Production Systems for Hydrogen Energy 121
9.2.1. Energy Sources 122
9.2.2. Production Methods for the Energy Carrier Hydrogen 123
9.3. Hydrogen-Energy Conversion Systems 124
9.3.1. New Developments for Hydrogen Storage 124
9.3.1.1. Cryoadsorption 124
9.3.1.2. Hydride Technology 125
9.3.1.3. Liquid Organic Hydrogen Carriers . 130
9.3.2. Combustion and Heating 130
9.3.3. Hydrogen Fuel Systems 131
9.3.3.1. Hydrogen Propulsion Systems for Space 131
9.3.3.2. Hydrogen as Aviation Fuel 132
9.3.3.3. Hydrogen for Automotive Vehicle Transport 132
9.3.4. Electricity Generation from Hydrogen 135
9.3.4.1. Heat – Power Processes 136
9.3.4.2. Electrochemical Energy Conversion 136
9.4. Future Developments 137
9.4.1. Production Schemes 137
9.4.2. Hydrogen Energy Economics 140
9.4.3. International Research 141
10. References 145

1. History

In the middle ages PARACELSUS is reported to have noted that a gas is yielded when iron is dissolved in the "spirit of vitriole". TURQUET DE MAYERNE (1573 – 1655) noted that this gas was inflammable. However, hydrogen was first separated and identified in the second half of the 18th century; BOYLE produced "facticious air" from diluted sulfuric acid and iron.

CAVENDISH (1731 – 1810) proved that there were different types of air, one of which was "inflammable air" and that a number of metals, when dissolved in acid, produced various amounts of this gas. In 1766, he published precise values for the specific weight and density. During the late 1770s, he made experiments with electrical discharges in a hydrogen – oxygen mixture thereby producing water.

In 1785, LAVOISIER, demonstrated the splitting of water into hydrogen and oxygen in a heated copper tube. He also gave the "inflammable air" the name hydrogen.

Chronology of Further Significant Events

1800 First production of hydrogen and oxygen by electrolysis (NICHOLSON and CARLYLE)
1898 Liquefaction of hydrogen using the Linde process (J. DEWAR)
1902 First commercial electrolysis installation by OERLIKON
1929 Production of pure para-hydrogen (K. F. BONHOEFFER, P. HARTECK)
1931 Discovery of the hydrogen isotope deuterium (H. C. UREY)
1935 Synthesis of "superheavy hydrogen", tritium, through neutron bombardment of deuterated phosphoric acid (P. HARTECK, OLIFANT, E. RUTHERFORD)

1954 Ignition of the first hydrogen bomb on the Bikini Atoll (USA)

1955 Description of the utilization of hydrogen as energy carrier medium (JUSTI)

1969 Development of an overall hydrogen energy concept using the favorable properties of hydrogen and including non-conventional energy systems (J. O. M. BOCKRIS, D. P. GREGORY, C. MARCHETTI, T. N. VEZIROGLU, and others)

1986 The total hydrogen production worldwide amounts to 500×10^6 m^3 (STP)/a. U.S. hydrogen production and consumption is about 8×10^6 t.

Hydrogen in Transportation. The buoyancy of hydrogen quickly lead to the use of this gas in balloons (C. CHARLES, 1783), but the use for aeronautics was ended by the HINDENBURG disaster at Lakehurst in 1937. Experiments using hydrogen as an *engine fuel* had already been carried out in 1820 by W. CECIL. These experiments were followed by investigations in car engines up until the Second World War and partly afterwards (RICARDO, BURSTAL, ERREN). Various transport systems using hydrogen were tested, e.g., in the United States by R. BILLINGS or in the Federal Republic of Germany (Daimler Benz, BMW) in the last decade.

The potential of hydrogen as an *aviation fuel* was established 1957 with the lift-off of a hydrogen-powered B-57 twin-engine jet bomber. From 1963 on liquid hydrogen –liquid oxygen propelled rockets were launched. For the Apollo moon flights 12×10^6 L of liquid hydrogen were necessary to tank the Saturn carrier rockets.

2. Properties

Hydrogen (hydrogenium, $\acute{\upsilon}\ \delta\ \omega\ \varrho$ = the water, $\gamma\ \varepsilon\ \nu\ \nu\ \varepsilon\ \iota\ \nu$ = to give birth) [*12 385-13-6*] H, A_r 1.00 797, atomic number 1, is the first element in the periodic table, having the electron configuration $1\ s^1$. It has usually the oxidation state +1, but in salt-type hydrides −1 is also possible. Three isotopes with A_r 1, 2 and 3 are known; the isotope with A_r 3 is unstable. The differences in the relative isotopic masses are large so that physical and kinetic properties can differ considerably. The isotope with the relative mass 2 is named *deuterium* [*16873-17-9*] (symbol D), that with the mass 3 *tritium* [*15 086-10-9*] (symbol T). The atomic nuclei, all with a single positive charge, are given the names *proton, deuteron*, and *triton.*

With the expected increasing significance of hydrogen as a universal chemical and as an energy carrier, its physical and thermodynamic properties have undergone further extensive investigations. The compilation given here is an excerpt; comprehensive data can be found in various summaries and other literature, e.g., in [1 – 8].

2.1. Physical Properties

2.1.1. General Physical Data

The *atomic radius* of the free hydrogen atom is 53 pm, the *covalent atomic radius* of hydrogen in crystal structures is between 30 and 35 pm. The length of the H – C bond in saturated hydrocarbons is ca. 112 pm, in water vapor the H – O bond has a length of 96 pm. The isotopes H, D and T form diatomic molecules, the combinations being H_2, [*1333-74-0*], D_2 [*7782-39-0*], T_2 [*10028-17-8*], HD [*13983-20-5*], HT [*14 885-60-0*] and DT [*14885-61-1*]. Atomic and molecular data are given in Table 1.

Ortho- and Para-Hydrogen. The atomic nuclei of hydrogen and its isotopes possess a spin, the value of which is 1/2 for H and T, and 1 for D. In the diatomic molecules both atomic nuclei can either rotate in the same or in opposing direction, i.e., parallel or anti-parallel. The molecules H_2, D_2 and T_2 can therefore exist in the form of two isomers with different nuclear spin, namely in the ortho-form (parallel nuclear spin) and in the para-form (anti-parallel nuclear spin); the two forms are interconvertible and in equilibrium with each other. This effect can be observed in all homonuclear diatomic molecules in which the nuclei have spins, but in the case of hydrogen the effects on properties are most pronounced. The following forms can be distinguished:

Table 1. Atomic and molecular data of hydrogen and hydrogen isotopes

	Protium ^1_1H	Deuterium ^2_1H	Tritium ^3_1H
A_r	1.007825	2.0140	3.01605
Natural abundance, %	99.985	0.015	$<10^{-12}$
Half-life, a			12.26
Particle energies, MeV			0.01861 (β-emission)
Thermal neutron capture cross section, barn (10^{-24} cm^2)	0.322	$0.51 \cdot 10^{-3}$	$<6 \cdot 10^{-6}$
Nuclear spin, $h/2\ \pi$	1/2	1	1/2
Nuclear magnetic moment, nuclear magnetons	+2.79278	+0.85742	

	n-H_2	n-D_2	n-T_2	HD	HT	DT
M_r	2.016	4.029	6.034	3.022	4.025	5.022
Bond length, pm	74.6	74.2		74.1		
Dissociation energy, kJ/mol	431.6	439.2		435.1		
Triple point						
temperature, K	13.96	18.73	20.62	16.60	17.63	19.71
pressure, kPa	7.3	17.1	21.6	12.8	17.7	19.4
Critical point						
temperature, K	32.98	38.35	40.44	35.91	37.13	39.42
pressure, MPa	1.31	1.67	1.85	1.48	1.57	1.77
Normal boiling point, K (atmospheric pressure)	20.39	23.67	25.04	22.13	22.92	24.38
Density at normal boiling point						
ϱ_L, kg/m^3	70.811	162.50	260.17	114.80	158.62	211.54
ϱ_V, kg/m^3	1.316	2.230	3.136	1.802	2.310	2.694
Heat of vaporisation (25 K), J/mol	825	1175	1400	1000	1100	1290

o-H_2	ortho-hydrogen
p-H_2	para-hydrogen
e-H_2	equilibrium hydrogen
n-H_2	normal hydrogen

e-H_2, e-D_2 and e-T_2 all correspond to mixtures of the equilibrium concentration of *definite* temperatures. n-H_2 (n-D_2, n-T_2) is a mixture of the equilibrium concentration at *ambient* temperature, i.e., 25 mol % p-H_2 or p-T_2 and 75 % o-H_2 or o-T_2. n-D_2 contains 33.33 % p-D_2 and 66.67 % o-D_2.

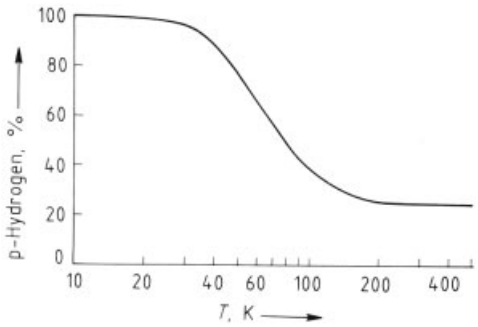

Figure 1. Equilibrium composition for the conversion of o-hydrogen – p-hydrogen

The conversions o-H_2 to p-H_2 and o-T_2 to p-T_2 are exothermic; both equilibrium composition and heat of conversion are a function of temperature, but independent of pressure (see Figs. 1 and 2).

For D_2 the ortho : para relation is different to that of H_2 and T_2. The conversion p-D_2 to o-D_2 is exothermic so that at low temperatures the ortho – form is prevalent, e.g., at 20 K 99.52 %.

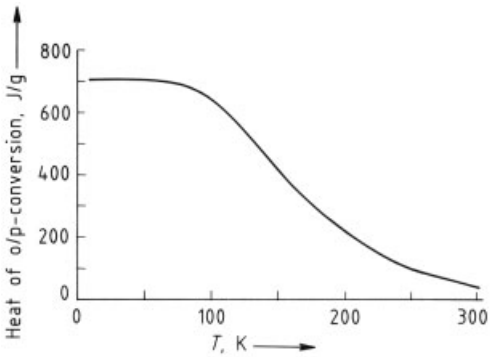

Figure 2. Heat of conversion of o-hydrogen – p-hydrogen

The ortho – para equilibrium is attained very slowly in the gaseous phase (see Fig. 3), but more rapidly in the condensed state (see Chap. 6). The

conversion of deuterium is slower than that of hydrogen, but tritium reacts more rapidly than H_2. Solid tritium, for example has a conversion rate 210 times faster than solid hydrogen. The conversion rate can be increased in the presence of catalysts or magnetic fields. The hydroxides of Fe (III), Co (III), Ni (II), Cr (III), Mn (IV) or active charcoal are effective as catalysts [9, 10]. Apart from strong homogeneous magnetic fields, the inhomogeneous magnetic fields of paramagnetic substances, electrical discharges as well as thermo and photochemical activation increase the conversion rate.

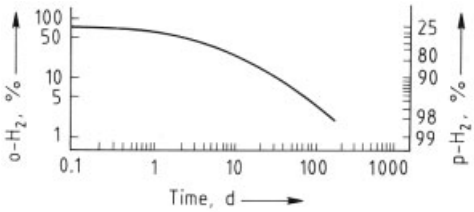

Figure 3. Self conversion of o-hydrogen to *p*-hydrogen in absence of catalysts as a function of time

Thermodynamic Properties. The differences in the masses of the isotopes are relatively large, so that thermodynamic properties differ considerably. Small differences are also found among the spin-spin isomers so that for certain purposes attention must be paid to the actual form present. At low temperature *p*-H_2, *o*-D_2 or *p*-T_2 can be present in a virtually pure state. The properties of *n*-H_2 (o – p isomerization prevented by rapid cooling) are also known at low temperatures.

Hydrogen gas is colorless, non-poisonous, odorless and tasteless. At 0 °C and 100 kPa 1 L of H_2 has a mass of 0.0898 g. The most important properties of n-H_2 and p-H_2 are given in Tables 2 3 4, and Figure 4.

Contrary to most other gases, the *inversion temperature* of hydrogen lies below ambient temperature. The temperature, at which the negative Joule – Thomson coefficient μ (heating by expansion) changes to a positive μ (cooling by expansion), can be seen from the Joule – Thomson inversion curve (Fig. 5). A cooling effect is obtained only when the decompression takes place from a state which is characterized by a point below the inversion curve.

Liquid hydrogen is a colorless, very mobile liquid with low viscosity and surface tension. Some properties are given in Tables 2 and 4.

Table 2. Selection of physical properties of n-hydrogen and p-hydrogen at fixed points

	p-Hydrogen	n-Hydrogen
Triple point		
Temperature, K	13.803	13.957
Pressure, kPa	7.04	7.2
Density (solid), kg/m^3	86.48	86.71
Density (liquid), kg/m^3	77.03	77.21
Density (vapor), kg/m^3	0.126	0.130
Boiling point (101.3 kPa), K	20.268	20.39
Heat of vaporization, J/mol	898.30	899.1
Liquid phase		
Density, kg/m^3	70.78	70.96
Specific heat capacity		
C_p, J mol^{-1} K^{-1}	19.70	19.7
C_v, J mol^{-1} K^{-1}	11.60	11.6
Enthalpy,* J/mol	−516.6	548.3
Entropy, J mol^{-1} K^{-1}	16.08	34.92
Viscosity, mPa s	13.2×10^{-3}	13.3×10^{-3}
Velocity of sound, m/s	1089	1101
Thermal conductivity, W m^{-1} K^{-1}	98.92×10^{-3}	100×10^{-3}
Compressibility factor	0.01712	0.01698
Vapor phase		
Density, kg/m^3	1.338	1.331
Specific heat capacity		
C_p, J mol^{-1} K^{-1}	24.49	24.60
C_v, J mol^{-1} K^{-1}	13.10	13.2
Enthalpy,* J/mol	381.61	1447.4
Entropy, J mol^{-1} K^{-1}	60.41	78.94
Viscosity, mPa s	1.13×10^{-3}	1.11×10^{-3}
Velocity of sound, m/s	355	357
Thermal conductivity, W m^{-1} K^{-1}	16.94×10^{-3}	16.5×10^{-3}
Compressibility factor	0.906	0.906
Critical point		
Temperature, K	32.976	33.19
Pressure, MPa	1.29	1.325
Density, kg/m^3	31.43	30.12
Properties at STP (273.15 K, 101.3 kPa)		
Density, kg/m^3	0.0899	0.0899
Specific heat capacity		
C_p, J mol^{-1} K^{-1}	30.35	28.59
C_v, J mol^{-1} K^{-1}	21.87	20.3
Viscosity, mPa s	8.34×10^{-3}	8.34×10^{-3}
Velocity of sound, m/s	1246	1246
Thermal conductivity, W m^{-1} K^{-1}	182.6×10^{-3}	173.9×10^{-3}
Dielectric constant	1.00027	1.000271
Compressibility factor	1.0005	1.00042
Prandtl number	0.6873	0.680

* The reference state for enthalpy is zero for the ideal gas at 0 K.

Table 3. Some physical and thermodynamic properties of gaseous n-hydrogen

T, °C	Density, kg/m^3	C_p, J mol^{-1} K^{-1}	C_v, J mol^{-1} K^{-1}	Enthalpy, kJ/mol	Entropy, J mol^{-1} K^{-1}
−150	0.1994	23.97	15.65	3.7086	191.38
−150	0.1418	26.42	18.08	4.9434	126.98
− 50	0.1100	27.85	19.55	6.3342	133.87
0	0.0899	28.61	20.32	7.7492	139.59
+ 50	0.0760	29.03	20.68	9.1914	144.44
+100	0.0658	29.20	20.84	10.6461	148.62
+150	0.0580	29.20	20.91	12.1062	152.30

Table 4. Vapor pressure and density of p-hydrogen at low temperatures

Temperature, K	Vapor pressure, kPa	Density, kg/m^3		
		ϱ_S	ϱ_L	ϱ_G
1	11.0×10^{-37}	89.024		
5	4.76×10^{-3}	88.965		
10	2.556×10^{2}	88.136		0.006
12	1.837×10^{3}	87.532		0.037
13.803 [a]	7.0	86.503	77.019	0.126
20	93.5		71.086	1.247
20.268 [b]	101.3		70.779	1.338
30	822.5		53.930	10.887
32.976 [c]	1.293×10^{3}			31.43

[a] Triple point.
[b] 101.3 kPa.
[c] Critical point.

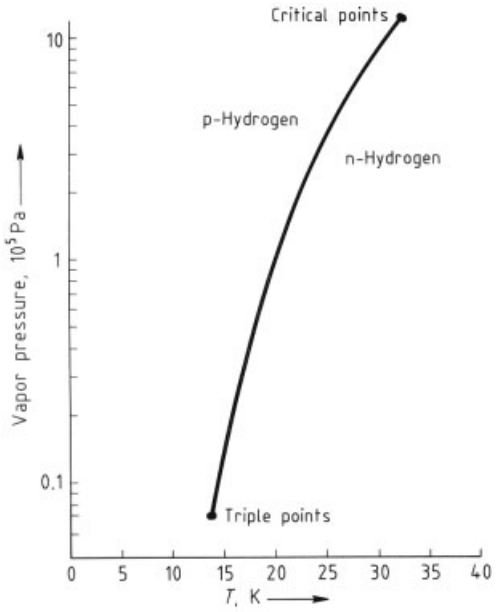

Figure 4. Vapor pressure of n-hydrogen and p-hydrogen

Solid hydrogen is colorless and crystallizes in the hexagonal closest-packed structure. Data for p-H_2 are: a = 375 pm, c/a = 1.633, molar volume 22.56 cm^3/mol [11]. At higher pressure several phase transitions occur [12]. Under extremely high pressure (ca. $2-3\times10^{11}$ Pa) a metallic, electrically conductive hydrogen phase with a density of >1.000 kg/m^3 has been reported [13 – 15]. Some properties of solid p-H_2 at the triple point are presented in Table 5.

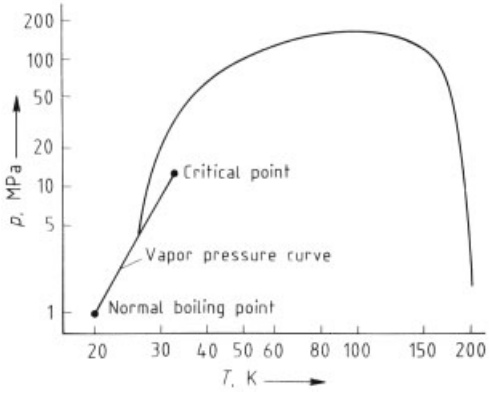

Figure 5. Joule – Thomson inversion curve for p-hydrogen with vapor pressure curve

Table 5. Properties of solid p-hydrogen at triple point (7.04 kPa, 13.803 K)

Density, kg/m^3	86.50
Heat of fusion, J/mol	117.5
Heat of sublimation, J/mol	1022.9
Molar heat, J mol^{-1} K^{-1}	5.73
Enthalpy, J/mol	−740.2
Entropy, J mol^{-1} K^{-1}	1.49
Thermal conductivity, W m^{-1} K^{-1}	0.9
Dielectric constant	1.286

2.1.2. Solubilities, Diffusion Properties and Evaporation Equilibria

Solubility of Hydrogen in Liquids. Hydrogen is only slightly soluble in liquids. In contrast to the highly-soluble gases, however, the solubility generally increases with increasing temperature. Examples for the solubility in *nonaqueous solvents* are given in Table 6 and Figure 6.

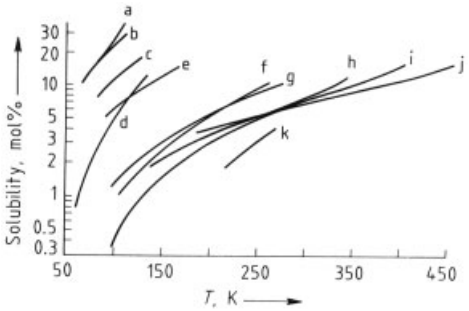

Figure 6. Solubility of hydrogen in various liquids (hydrogen pressure 10 MPa)
a) N_2; b) CO; c) Ar; d) O_2; e) CH_4; f) C_2H_4; g) C_2H_6; h) C_3H_6; i) C_4H_{10}; j) C_6H_{14}; k) CO_2

The water solubility has a minimum at ca. 50 °C and then increases again with increasing temperatures (see Table 7). Electrolytes lower the water solubility because of the salt effect.

Because of the reduced volatility, deuterium, tritium, and their various interisotopic compounds have a somewhat greater solubility than the comparable hydrogen compounds. The relative differences in solubility amount to a few percent only (close to the accuracy of measurement) and diminish with increasing temperature.

Solubility of Hydrogen in Metals. Metals, with not completely occupied inner electron levels, have a particularly high solubility potential for hydrogen. Hydrogen is dissolved in metals not in the molecular but in the atomic form, whereby *non-stoichiometrical* (alloy-type) or *stoichiometrical* (partly hydride-type) compounds may be formed.

The solubility of hydrogen in metals at small hydrogen concentrations is proportional to the root of the hydrogen partial pressure (Sievert's law). The hydrogen solubility decreases with increasing temperature. Hydrides can be decomposed thermally.

Palladium and palladium – silver alloys with a silver content <40 wt % have a particularly high solubility potential for hydrogen. The hydrogen atoms give their electrons to the electron gas of the palladium metal and occupy interstitial sites of the metal crystal structure. Palladium can absorb 2800 times its own volume of hydrogen. Figure 7 shows isotherms for hydrogen in

Table 6. Solubility of hydrogen in nonaqueous solvents

Solvent	t, °C	p, [a] MPa	Solubility, mol %
Hexane	0	0.1	5.82×10^{-2}
Benzene	20	0.1	2.47×10^{-2}
Diethylether	0	0.1	5.29×10^{-2}
Ethanol	0	0.1	1.8×10^{-2}
Carbon tetrachloride	0	0.1	2.60×10^{-2}
Freon 113	25	0.1	6.55×10^{-2}
Naphtha [b]	25	1	0.031 [d]
Naphtha	25	5	0.151 [d]
Naphtha	25	10	0.295 [d]
Gas oil [c]	25	1	0.027 [d]
Gas oil	25	5	0.137 [d]
Gas oil	25	10	0.274 [d]

[a] Partial pressure of hydrogen.
[b] Density 0.8003 g/cm^3, vapor pressure 10.7 kPa (25 °C).
[c] Density 0.8319 g/cm^3, vapor pressure 0.3 kPa (25 °C).
[d] Moles per kilogram solvent

palladium. They are similar to the Van der Waals isotherms of real gases. For an explanation of the so-called plateau dissociation pressure see Section 9.3.

Table 7. Solubility of hydrogen in water at a hydrogen pressure of 101.3 kPa [17]

T, K	Solubility, 10^3 mol %	Ostwald – coefficient $\times 10^2$
273.15	1.755	2.184
283.15	1.576	2.032
293.15	1.455	1.940
303.15	1.377	1.893
313.15	1.330	1.883
323.15	1.310	1.905
333.15	1.312	1.957
343.15	1.333	2.037
353.15	1.371	2.144

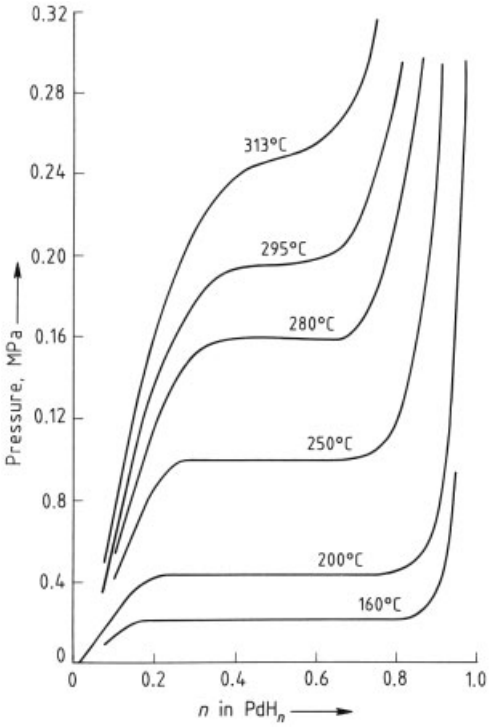

Figure 7. Pressure – composition isotherms for hydrogen in palladium [19]

The solubility of the hydrogen isotopes in palladium decreases in the order H > D > T; with group 5 metals (V, Nb, Ta), however, the solubility increases in this order. This effect is explained by differences in the vibration energies of the metal structure (in palladium: octaeder holes are occupied; in group 5 metals: tetraeder holes are occupied).

Impurities in the metal and in the hydrogen can lower the solubility or cancel it completely. Especially carbon monoxide, hydrogen sulfide and oxygen are poisonous with this respect.

Dissolved hydrogen in metals influences their mechanical properties (hydrogen embrittlement, see Section 7.5), magnetic properties (reduction of the paramagnetism of Cr and Ti) and can cause superconductivity. For example, nonsuperconductive palladium becomes superconducting if hydrogen is added, to the extent of $PdH_{0.8}$. The transition temperature of $PdH_{1.0}$ is 8.8 K, that of $PdD_{1.0}$ 10.7 K, whereas $Pd_{0.55}Cu_{0.45}H_{0.7}$ even has a transition temperature of 17 K.

The absorption of hydrogen in metals and metal alloys has become important for the storage of hydrogen in hydride storage systems. An overview of hydrogen in metals is given in [20] and [21] (→ Hydrides, see Section 9.3).

Solubility of Gases in Liquid Hydrogen. With the exception of helium all gases are solid at the temperature of liquid hydrogen. In liquid hydrogen they are soluble only in traces: oxygen (32 – 26 K) <0.5 ppm; nitrogen (32 K) ca. 15 ppm, (20.4 K) <0.1 ppm.

The solubility of helium in liquid hydrogen at 1 MPa is shown in Figure 8: In the range of 16 – 26 K it increases from 0.5 to 3 mol % and then decreases at higher temperatures.

Vapor – Liquid Equilibria. Various vapor – liquid equlibrium systems exist at low temperature. However, only the isotope mixtures, e.g., H_2 – HD, or H_2 – D_2 show simple boiling point diagrams with only little deviation from the ideal behavior. The vapor pressures of the mixture H_2 – HD, e.g., deviate 4 % at the most from that of an ideal mixture [22, 23].

Two- and multicomponent mixtures with nitrogen, carbon monoxide and methane are important in low-temperature processes for separation or purification of hydrogen. In these mixtures the hydrogen in the hydrogen-poor liquid phase is supercritical. Low hydrogen contents in the coexistent liquid can only be reached in the neighborhood of the melting point of the non-hydrogen components.

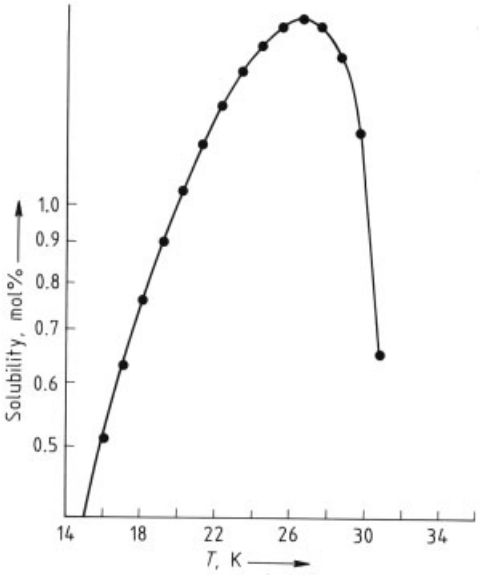

Figure 8. Solubility of helium in liquid hydrogen (pressure 1 MPa)
● liquid concentration He

Figure 9 shows the hydrogen equilibrium concentrations in the liquid and the gas phase in the systems H_2 – CO and H_2 – N_2 [17, 18].

The system H_2 – Ne shows a complicated behavior. Figure 10 shows a *p*-*x*-diagram for the composition range in which a miscibility gap in the liquid phase occurs: If a mixture with the composition x_1, is compressed isothermally, first two two-phase regions, each with a different liquid-phase composition are found. Then a one-phase region (a hydrogen-rich liquid phase) is reached. At the composition x_2 only one two-phase liquid system exists. At the composition x_3 an azeotropic mixture is formed, the liquid phase has the same composition as the gas phase. Equilibrium compositions of the system H_2 – Ne are given in [16].

Diffusion Properties. Hydrogen is the element with the highest diffusion capacity. Some diffusion coefficients of hydrogen in gases and liquids are given in Table 8. For further values see [1, 4, 24, 25]. In metals with a high hydrogen solubility usually a high hydrogen diffusion coefficient is also found, e.g., in palladium 5×10^{-7} cm^2/s and in vanadium 5×10^{-5} cm^2/s (at 25 °C). These values are in the same range as the diffusion coefficient of hydrogen ions in water (ca. 10^{-4} cm^2/s).

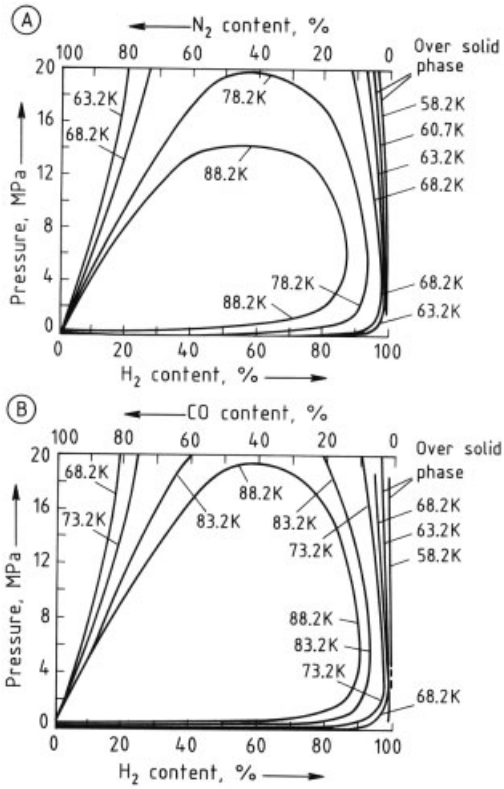

Figure 9. Vapor – liquid equilibria of the systems H_2 – N_2 (A) and H_2 – CO (B)
Isotherms show (clockwise from left to right) the composition of the liquid phase, the critical pressure at the maximum of the isotherm, and the composition of the gas phase as a function of pressure (concentrations in mol %)

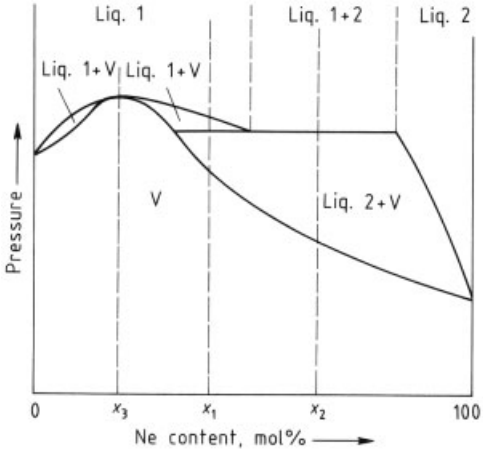

Figure 10. Sketch of a typical isotherm in the range of existence of a miscibility gap of the system n-H_2 and Ne [16] (V = vapor phase, liq. 1 = hydrogen-rich liquid phase; liq. 2 = neon-rich liquid phase)

Table 8. Diffusion coefficients of hydrogen in gases (pressure 100 kPa) and liquids

Diffusion in	t, °C	D, cm^2/s
N_2	0	0.674
O_2	0	0.701
H_2 (selfdiffusion)	0	1.285
H_2O, vapor	0	0.759
H_2O, liquid	25	4.8×10^{-5}
Iron, smelting	1600	5.64×10^{-3}
Aluminum, smelting	960	1.28×10^{-5}

2.2. Chemical Properties

The first electron shell can be filled with a maximum of two electrons. Therefore, the chemistry of hydrogen depends mainly on three processes, (1) loss of the valency electron to yield the hydrogen ion, H^+; (2) gain of an electron to form the hydride ion, H^-, and (3) formation of an electron pair bond. The degree of covalent: ionic character of this bond depends on the electronegativity of the element to which hydrogen is attached. The electronegativity of hydrogen according to PAULING is 2.1. Except in the hydrogen molecule itself, where the bond is homopolar, all H – X bonds will possess some polar character.

Hydrogen is not exceptionally reactive, although hydrogen atoms react with one another and with all other elements with the exception of the noble gases (only with helium short-lived instable forms such as HeH^+ and HeH_2^{2+} are known). Hydrogen oxidizes less electronegative elements (e.g., alkali and alkaline earth metals), and reduces more electronegative ones (e.g., halogens, oxygen, nitrogen, carbon).

The strength of the H – X bond in covalent hydrides depends on the electronegativity and size of the element X. The bond strength decreases in a group with increasing atomic number and generally increases across any period. The most stable covalent bonds are those formed between two hydrogen atoms (or isotopes), or with halogens, oxygen, carbon, and nitrogen. The average values for the bond energy are given in Table 9.

Halogens react with hydrogen to yield hydrogen halides, with increasing reactivity in the sequence iodine, bromine, chlorine, and fluorine. At −210 °C liquid fluorine ignites immediately in hydrogen; solid fluorine explodes violently in the presence of liquid hydrogen; similarly, combined hydrogen reacts more or less violently with fluorine. Chlorine and bromine also react explosively with hydrogen on excitation by heat or ultraviolet radiation (chlorine hydrogen reaction). Fluorine, chlorine, and bromine react with hydrogen in a radical chain reaction:

Table 9. Average bond-dissociation energies of representative covalent hydrogen bonds at 298 K

Bond	kJ/mol	Bond	kJ/mol
H−H	428.2	H−N	314
H−D	440	H−N=	435.4
D−D	443.4	H−O	428.2
T−T	446	H−OH	498.1
$H-CH_3$	435.3	H−S	344.5
H−C=	452	H−Cl	431.6
H−C≡	536	H−F	568.9

initiation reaction

$$Hal_2 \rightarrow 2\,Hal\cdot$$

propagation reactions

$$Hal\cdot + H_2 \rightarrow H\cdot + HalH$$

$$Hal_2 + H\cdot \rightarrow HHal + Hal\cdot$$

Oxygen reacts with hydrogen according to

$$H_2 + 1/2\,O_2 \rightarrow H_2O \quad \Delta H^0_{298} = -286.02\,kJ/mol$$

Above 550 °C the reaction occurs with flame propagation, explosion or detonation (oxyhydrogen reaction). The flame temperature is limited by the thermal dissociation of water vapor and attains a maximum of 2700 °C. For the explosion limits in air or oxygen see Section 2.3.

At elevated temperatures in presence of suitable catalysts, hydrogen will react with *nitrogen* to form ammonia. Industrially this is one of the most important reactions (→ Ammonia).

Hydrogen reacts with *carbon* at high temperatures to yield methane. The equilibrium of the reaction is on the methane side at low temperatures, and on the hydrogen and carbon side at high temperatures. The equilibrium constant, using graphite as a basis, is 2×10^5 bar at 150 °C and 9.4×10^{-3} bar at 1000 °C. Equilibria related to amorphous carbon and other values are given in [26, 27]. Carbon monoxide and carbon dioxide can react with hydrogen in the presence of a catalyst. Depending on the reaction conditions, catalyst and $CO:H_2$ ratio a variety of products can be formed (→ Gas Production, see Section 8.1.4).

Unsaturated hydrocarbons are converted to saturated or partially saturated hydrocarbons by hydrogenation.

Further reactions of hydrogen include reductions of functional organic groups ($-NO_2 \longrightarrow NH_2$, $-COOH \longrightarrow CH_2OH$, etc). In the petroleum industry ($\rightarrow$ Oil Refining) hydrogenation and hydrocracking reactions are of importance as well as desulfurization and selective hydrogenation (dienes, monoolefins). For details of reduction and hydrogenation with hydrogen of other compounds see the appropriate keywords.

A great number of *metals* react with hydrogen to form hydrides. Depending on the nature of the hydrogen bond, hydrides are classified into three principal categories: saline, covalent and metallic (see surveys in [20, 21]), ($\rightarrow$ Hydrides).

The *saline hydrides* or ionic hydrides are formed when the strongly electropositive alkali metals and the alkaline earth metals (calcium, strontium, barium), all usually in the elemental form, react with hydrogen at high temperatures. Salt-like hydrides contain the hydride ion, H^-; they are crystalline, have high heats of formation and high melting points. They are reactive, powerful reducing agents, all of them reacting with water to liberate hydrogen.

Covalent hydrides may be either solid, liquid or gaseous; typical are the hydrides of boron, aluminum, silicon, germanium and tin. Beryllium and magnesium hydride seem to represent a transition between ionic and covalent hydrides. The bond between hydrogen and the atom is of the nonpolar electron-sharing type. Molecular stability often is provided by means of three-centered two-electron bridge bonds (e.g., in diborane, B_2H_6, an electron-deficient type molecule), by hydride anion formation (BH_4^-, AlH_4^-), or formation of polymeric structures [polymeric $(AlH_3)_x$].

Metallic hydrides are formed by the transition metals. Transformation of a pure metal into a hydride occurs through continuous solution of hydrogen in the metal with subsequent abrupt phase transition at defined stoichiometric hydride phases (ZrH_2, PdH, VH, VH_2).

The Hydrogen Bond. Substances containing hydrogen coupled to the most electronegative elements exhibit properties that are best explained by assuming that the hydrogen atom of an H – X bond still has a small but significant affinity for other electronegative atoms although it remains strongly bonded to the original atom. This relatively weak secondary bond is called a hydrogen bond normally depicted by the notation

$$X-H\cdots Y$$

Hydrogen bonds result in molecular association. NH_3, H_2O, and HF have much higher boiling points and heats of vaporization than the corresponding homologues PH_3, H_2S, and HCl. Carboxylic acids such as acetic or benzoic acids are present as dimers with the configuration

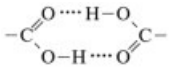

The presence of hydrogen bonds also causes formation of crystalline hydrates such as $NH_3 \cdot H_2O$, $SO_2 \cdot H_2O$ hydrocarbon hydrates (e.g., with natural gas components) as well as the zigzag structure of the $(HF)_n$ polymer.

The existence of the hydrogen bond can be shown by infrared spectroscopy. When the hydrogen of the X – H group forms a hydrogen bond with the atom Y, the X – H stretching frequency is lowered and the absorption band characteristically broadened. In NMR spectroscopy a proton, which participates in a hydrogen bond, produces a definite paramagnetic shift.

The energies of hydrogen bonds are in the range of 4 – 40 kJ/mol, which is small as compared to 200 – 400 kJ/mol for ordinary bonds. The average bond length is 200 – 300 pm (O – H . . . O in ice 276 pm).

Atomic Hydrogen. Atomic hydrogen is much more reactive than the molecular form. The dissociation reaction

$$H_2 \rightarrow 2\,H;\ \Delta H^0 = 432.2\,kJ/mol$$

is highly endothermic. Atomic hydrogen can be produced thermally by supplying sufficient energy, e.g., in electric arcs with a high current density, electrical discharges at low pressures, irradiation with UV light as well as electron bombardment (10 – 20 eV). The hydrogen atom has a short half-life (ca. 0.3 s) and reacts even at room temperature with nonmetallic elements such as halogens, oxygen, sulfur,

and phosphor to form the corresponding hydrogen compounds. At room temperature it reduces many oxides to the elements. The heat of recombination of hydrogen molecules from hydrogen atoms leads to very high temperatures (Langmuir flare, 4000 K).

Atomic hydrogen can be absorbed in the metallic structure of some elements of the Group 8 – 10 (Fe, Co, Ni) of the periodic system. The suitability of many catalysts for reactions involving hydrogen is based on the dissociation and solubility of hydrogen in the atomic form.

Hydrogen formed upon dissolution of metals in acids is very reactive at the moment of formation (nascent hydrogen), much more than normal hydrogen. This strong reduction capability is often explained by a shortterm formation of atomic hydrogen. Another explanation is the intermediate formation of a hydride-type compound which is very similar to Grignard compounds (→ Magnesium Compounds).

The Hydrogen Ion. The ionization potential of the reaction

$$\mathrm{H\,(g) \rightarrow H^+\,(g) + e^-};\ \Delta H = 1310\,\mathrm{kJ/mol}$$

is 13.595 eV, which is even higher than the first ionization potential of the noble gas xenon.

The hydrogen ion can be formed only in a medium which solvates the protons. The solvation process provides the energy required for bond rupture, the order of magnitude can be seen in the solvation reaction with water:

$$\mathrm{H^+\,(g) + \mathit{x}\,H_2O \rightarrow H^+\,(aq)};\ \Delta H = 1070\,\mathrm{kJ/mol}$$

In aqueous systems H_3O^+ is the form implied by the customary designation hydrogen ion. The structure of the H_3O^+ ion is that of a rather flat triangular pyramid with a HOH bond angle of ca. 110^0, O – H bonds distances of 102 pm and a H – H distance of 172 pm. Normally, it is coordinated with four water molecules not all of which are equivalent, so that the aquated hydrogen ion is best represented as $H_9O_4 \cdot H_2O$ [28]. The lifetime of an individual H_3O^+ ion is exceedingly short, 10^{-13} s, because the protons are rapidly exchanged among the water molecules.

Hydrogen Electrode. In aqueous solutions the hydrogen ion activity is given in terms of the pH value, defined as log $1/[H^+]$, where $[H^+]$ is the hydrogen ion activity. By definition, the potential of the redox system

$$\mathrm{1/2\,H_2\,(g) \rightarrow H^+\,(aq) + e^-}$$

is zero (E = 0.000 V) at all temperatures, when an inert metallic electrode is immersed in a solution of unit activity (i.e., pH = 0) in equilibrium with hydrogen gas at 100 kPa pressure. The electrode material is a small platinum foil or a wire, coated with finely dispersed platinum black and is placed partly in the solution and partly in the hydrogen atmosphere. This standard hydrogen electrode is the reference electrode of all other oxidation-reduction systems.

For pH measurement the potential difference of a hydrogen electrode to any other suitable reference electrode can be used. The calomel electrode, or half-cell, is usually employed. The pH value is given by

$$\mathrm{pH} = \frac{(\Delta\varepsilon - \varepsilon_\mathrm{v})}{0.059} - \frac{1}{2}\log p_{\mathrm{H_2}}$$

where: $\Delta\varepsilon$ is the potential difference between the hydrogen and the reference electrode (in Volt), ε_v the potential of the reference electrode (in Volt), and p_{H2} the hydrogen partial pressure (in bar) [29, 30].

2.3. Ignition and Detonation Performance

Given sufficient thermal activation (ignition energy), hydrogen reacts more or less violently with oxidizing agents such as oxygen (air), fluorine or chlorine, and N_2O. Depending on conditions, combustion, deflagration or detonation may occur.

Ignition and detonation properties of *hydrogen – air mixtures* are particularly important from the safety aspect (see also Section 7.7). The flammability limits (i.e., the difference between the rich and lean limit concentration) are exeptionally wide for hydrogen. Table 10 shows a comparison of safety-relevant thermo-physical and combustion properties of hydrogen with those of methane, propane and gasoline [31]. The flammability limits are affected by temperature as shown in Figure 11, so that a preheated mixture has considerably wider limits for coherent flames [32]. An increase in pressures up to 10 kPa has only a small effect. Water vapor has

a strongly inhibiting influence on the oxyhydrogen reaction (see ternary diagram, Figure 12). The flammability limits of hydrogen in *pure oxygen* are 4.65 – 93.9 vol % hydrogen, those of deuterium in pure oxygen 5.0 – 95 vol %. Ignition and detonation performance based on ignition range, ignition energy, flame propagation as well as transition from deflagration to detonation, are discussed in detail in Section 7.7.

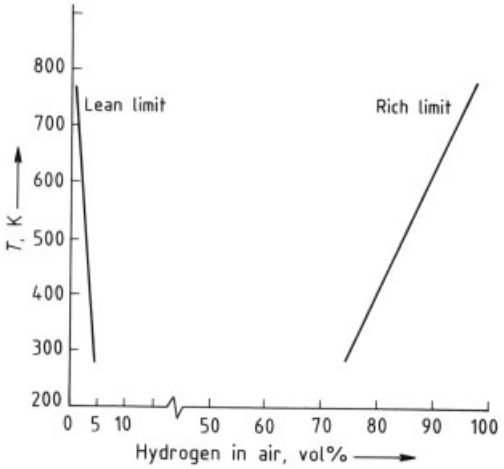

Figure 11. Effect of temperature on flammability limits of hydrogen in air (pressure 100 kPa)

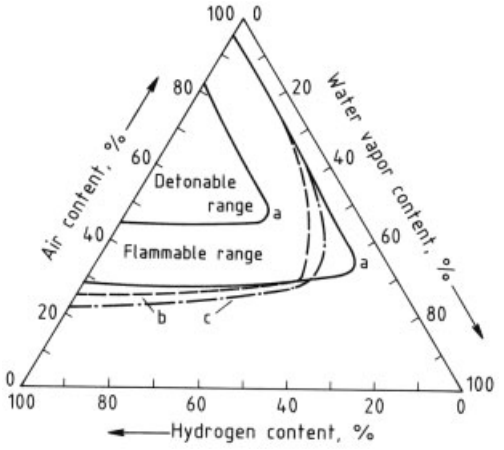

Figure 12. Flammability and detonability limits of the three component system hydrogen – air – water vapor [33]
a) 42 °C, 100 kPa; b) 167 °C, 100 kPa, c) 167 °C, 800 kPa

Hydrogen reacts with chlorine after excitation with radiation, heat or in the presence of catalysts. The ignition and explosion behavior of this reaction is of interest for the chlor-alkali electrolysis, because chlorine is usually liquefied after formation. The residual gas contains hydrogen (among other components) and might reach the ignition or detonation range because of the decreasing chlorine concentration in the gas phase during chlorine liquefaction.

The lower ignition limit of hydrogen-chlorine air mixtures is ca. 4 – 6.5 vol % H_2, the upper ignition limit lies between 73 vol % H_2 (Cl_2 concentration = 0 vol %) and 89 vol % H_2 (air concentration = 0 vol %). The lower detonation limit is between ca. 20 vol % H_2 (Cl_2 concentration = 0) and ca. 25 vol % H_2 (Cl_2 concentration = 30 – 40 vol %). An overview of the ignition and detonation properties of hydrogen – chlorine mixtures, and the influence of oxygen and inert gas is given in [34].

2.4. Isotopes

Hydrogen and deuterium are stable isotopes; tritium emits a low-energy β-radiation (disintegration into $^3_2\mathrm{He}$). The half-life is 12.26 a. The natural isotope distribution on earth is 99.985 atom % H and 0.0145 atom % D. Natural tritium occurs in the upper atmosphere and is caused by interaction of cosmic rays, mainly according to:

$$^{14}_{7}\mathrm{N}+^{1}_{0}\mathrm{n}\rightarrow^{3}_{1}\mathrm{T}+^{12}_{6}\mathrm{C}$$

Other tritium sources are nuclear reactors, where tritium is formed from lithium or D_2O by a neutron capture mechanism:

$$^{6}_{3}\mathrm{Li}+^{1}_{0}\mathrm{n}\rightarrow^{3}_{1}\mathrm{T}+^{4}_{2}\mathrm{He}$$

$$^{2}_{1}\mathrm{D}+^{1}_{0}\mathrm{n}\rightarrow^{3}_{1}\mathrm{T}$$

Tritium is also formed by fission processes, e.g., in nuclear experiments. Tritium disintegration and varying formation rates lead to changes in the tritium content. It is estimated to be ca. 10^{-13} – 10^{-12} atom % of the total hydrogen [35]. An overview is given in [36] and [37].

Physical Properties. The most important atomic and molecular data of hydrogen, deuterium, tritium and their diatomic combinations

Table 10. Combustion and explosion properties of hydrogen, methane, propane and gasoline

	Hydrogen	Methane	Propane	Gasoline
Density of gas at standard conditions, kg/m^3 (STP)	0.084	0.65	2.42	4.4 [a]
Heat of vaporisation, J/g	445.6	509.9		250 – 400
Lower heating value, kJ/g	119.93	50.02	46.35	44.5
Higher heating value, kJ/g	141.8	55.3	50.41	48
Thermal conductivity of gas at standard conditions, mW cm^{-1} K^{-1}	1.897	0.33	0.18	0.112
Diffusion coefficient in air at standard conditions, cm^2/s	0.61	0.16	0.12	0.05
Flammability limits in air, vol %	4.0 – 75	5.3 – 15	2.1 – 9.5	1 – 7.6
Detonability limits in air, vol %	18.3 – 59	6.3 – 13.5		1.1 – 3.3
Limiting oxygen index, vol %	5	12.1		11.6 [b]
Stoichiometric composition in air, vol %	29.53	9.48	4.03	1.76
Minimum energy for ignition in air, mJ	0.02	0.29	0.26	0.24
Autoignition temperature, K	858	813	760	500 – 744
Flame temperature in air, K	2318	2148	2385	2470
Maximum burning velocity in air at standard conditions, m/s	3.46	0.45	0.47	1.76
Detonation velocity in air at standard conditions, km/s	1.48 – 2.15	1.4 – 1.64	1.85	1.4 – 1.7 [c]
Energy [d] of explosion, mass-related, gTNT/g	24	11	10	10
Energy [d] of explosion, volume-related, gTNT/m^3 (STP)	2.02	7.03	20.5	44.2

[a] 100kPa and 15.5 °C.
[b] Average value for a mixture of C_1– C_4 and higher hydrocarbons including benzene.
[c] Based on the properties of *n*-pentane and benzene.
[d] Theoretical explosive yields.

are given in Table 1. Further thermodynamic data are tabulated in [38] for deuterium and [39] for tritium. Hydrogen, deuterium, and tritium show nuclear spin isomerism (see Section 2.1.1).

Figure 13 shows the vapor pressures of hydrogen molecules with a different isotopic composition. In [40] the system D_2 – DT – T_2 is described in the range 17 – 22 K. The compounds are totally miscible in the liquid and in the solid state. A 50 : 50 mol % mixture of D_2 – T_2 has a T content of 42 % in the gas phase and of 52 % in the solid phase at 19.7 K.

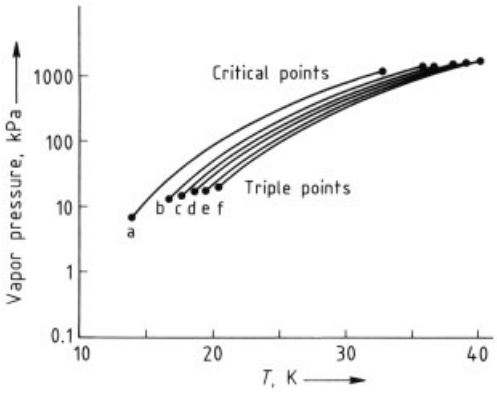

Figure 13. Vapor pressure of hydrogen isotopes a) H_2; b) HD; c) HT; d) D_2; e) DT; f) T_2

Various chemical and physical processes are used for the enrichment and separation of D_2 or D_2O from the natural isotopic mixture. All chemical processes are based on isotopic exchange reactions, e.g., the dual temperature H_2O – H_2S process, according to

$$H_2O + HDS \rightleftharpoons HDO + H_2S$$

in the ammonia exchange process

$$NH_3 + HD \rightleftharpoons NH_2D + H_2$$

and variations of this process such as the methylamine hydrogen process from Aecl-Sulzer according to

$$CH_2NH_2 + HD \rightleftharpoons H_2 + CH_3NHD$$

The processes are described in [36] as well as in → Isotopes, Natural.

On a small scale the electrolysis of enriched H_2O – D_2O is used, because this gives an isotopic separation factor of 7 – 8.

Low-temperature destillation of H_2 – D_2 is an example of the physical separation of the isotopes [41]. The heat generated by the ortho-para conversion must be taken into consideration. Other processes use *pressure swing adsorption* techniques [42]; the various permeation rates of H_2 and D_2 through *metal membranes* (Pd, Ta); or differences in the hydride or deuteride formation with metals [43], (see Section 9.3).

In general, the *chemical properties* of H, D and T are essentially identical. Small differences exist in the rates and the equilibrium constants of reactions because of the kinetic isotope and equilibrium effects. A greater amount of energy is required for the dissociation of a D – X bond and the activation into the transition state than for the comparable H – X bond (for numerable investigations see [44]). In biological systems substitution of deuterium for hydrogen atom can alter the delicately balanced processes substantially.

Deuterium has excellent properties as a moderator (i.e., a high ratio of neutron deceleration to absorption characteristics). The separation of the hydrogen isotopes is technically important for the production of heavy water (D_2O) as a moderator for nuclear reactors (→ Nuclear Technology).

Tritium also is used to mark organic compounds and for dating specimens. A detailed description of tritium and its compounds is found in [45].

3. Occurence

Hydrogen is the most abundant element in the universe. 70 – 80 wt % of the observable universe consists of hydrogen, the rest is mostly helium. Especially the younger stars (the novas) inter-stellar dust, and gas clouds contain hydrogen in large amounts. More than 50 wt % of the sun consists of hydrogen.

The neutral hydrogen atom which emits electromagnetic waves with a frequency of 1420 MHz, yields information on the structure of the universe. Large regions of interstellar space are filled with protons, which emit a radio continuum [46, 47].

Of the elements in the earth's crust, hydrogen takes the 9th place with 0.88 wt %. Based on the atomic concentration of 15.4 atom % it is the third most common element after oxygen and silicon. In the free state, hydrogen can be found in some vulcanic gases (up to ca. 30 vol %), in natural gas (from traces up to 40 vol % [48]); small quantities are trapped in some minerals, rocks and meterorites. In the upper atmosphere, the troposphere and the stratosphere, hydrogen is present only in traces of ca. 0.5 ppm (mL/m^3). Because of photolytic water cleavage the hydrogen concentration increases with increasing height. The exosphere (2000 – 20 000 km) contains atomic hydrogen.

Chemically bound hydrogen is present all over the earth: as part of the Earth's water mass (11.2 wt %), as part of organic matter (including fossil substances such as natural gas, oil, and coal). About 10 wt % of the human body consists of hydrogen.

4. Production

Hydrocarbons are the main source for the production of hydrogen on an industrial scale. An even larger source, however is water. When hydrogen is used as fuel, water is produced again. Thus, a cycle comparable to the carbon cycle (CO_2 – biomass – CO_2) —but much simpler— is involved, so that water can be regarded as an unlimited source of hydrogen. With the help of an external energy source, hydrogen can be produced from either of these sources alone or from a mixture of both.

Figure 14 shows the production of hydrogen using different sources of energy. The many production routes for hydrogen, however, are by no means of equal economic importance. Most of the hydrogen for industrial uses is produced from natural gas and oil, either as a main product or as a byproduct, a process involving a chemical conversion. A smaller percentage is produced electrolytically or occurs as a byproduct of electrochemical processes. Here the energy applied is in the form of electricity, which itself may be produced using hydroelectric, nuclear or, still predominant, the energy stored in fossil fuels.

Thermal, thermochemical, biochemical and photochemical processes have so far not found industrial applications. The preference of producing hydrogen from hydrocarbons is due to the fact that the energy demand using hydrocarbons is much lower than that for electrolysis of water (see Table 11).

Considering the strong correlation between energy prices and the prices for hydrocarbons, it is unlikely that the high percentage of the hydrocarbon processes for producing industrial hydrogen will change substantially in the near future. This last statement does not take into consideration environmental pollution by emission of

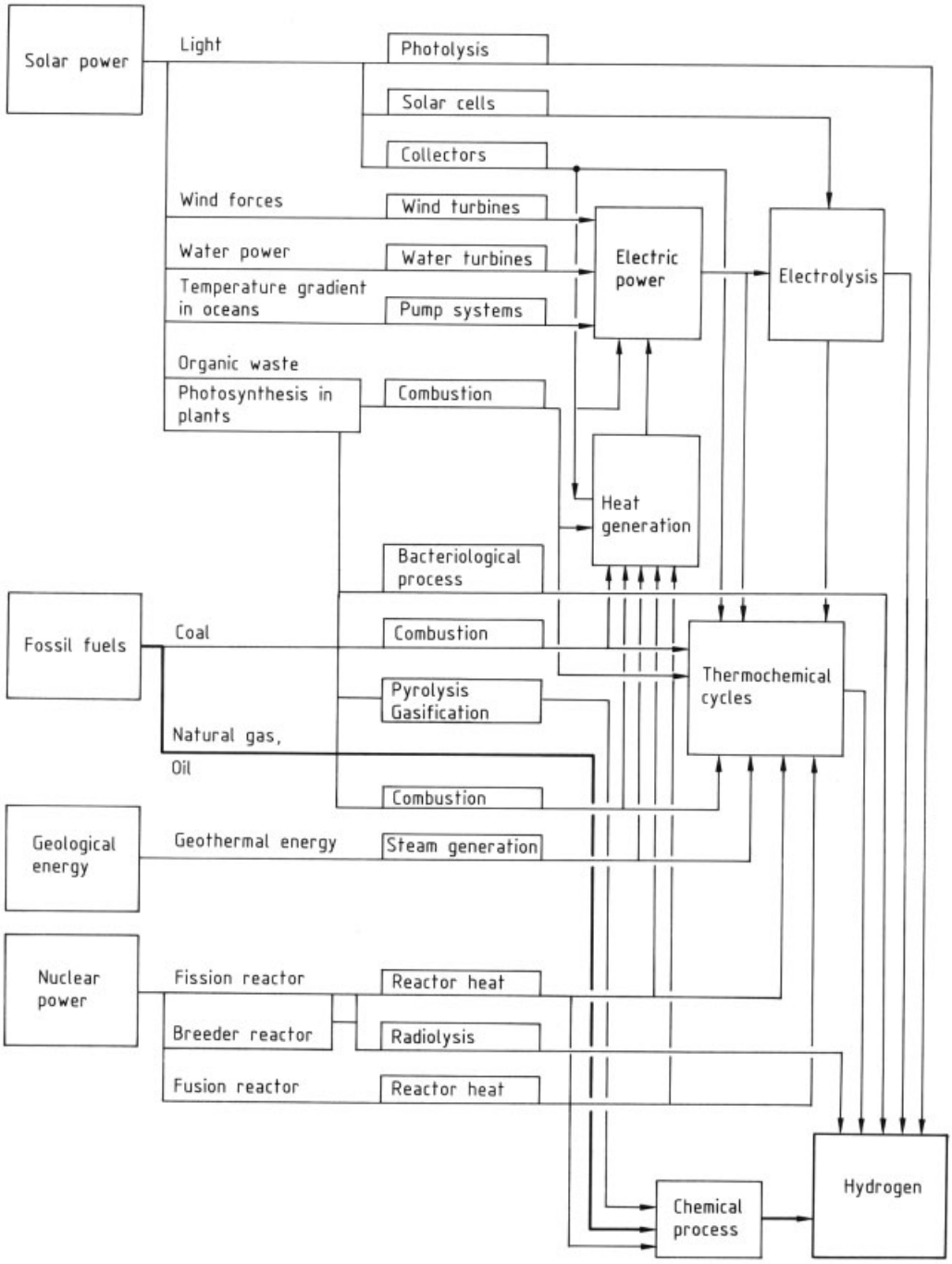

Figure 14. Primary energy, raw materials, production methods, paths of production, transformation, and generation of and for hydrogen, adapted from [49]

Table 11. Theoretical energy consumption for the production of hydrogen from various hydrocarbons, coal and water

	Natural gas as CH_4	LPG as $CH_{2.6}$	Naphtha as $CH_{2.2}$	Heavy oil as $CH_{1.4}$	Coal as $CH_{0.7}$	Water H_2O
Higher heating value, *						
kJ/kg	50 050	46 130	44 300	41 300	38 100	
kJ/mol	890	2480				
Byproducts	CO_2	CO_2	CO_2	CO_2/S	CO_2/S	O_2
Specific production of byproducts, kmol/kmol H_2	0.25	0.30	0.32	0.37/0.003 – 0.015	0.43/0.002 – 0.01	0.5
Theoretical energy consumption, * kJ/kmol H_2	41 280	37 500	38 350	50 300	57 150	242 000

* Calculated from the heat of formation, oxidizing carbon completely to carbon dioxide (at 298 K and 0.1 MPa) [73, 78].

carbon dioxide, sulfur compounds, nitrogen oxides and heat, so that this (environmental) aspect may reverse the situation one day.

4.1. Production from Coal and Hydrocarbons

The yield of hydrogen from hydrocarbons is summarized in Figure 15. Hydrocarbons and coal are characterized by their molar H : C ratio. Chemically pure compounds such as methane and its homologues can be found on line (A) and give maximum hydrogen yield. Raw materials such as hard coal (a), lignite (b) and natural gas (h) give a lower hydrogen yield because they contain inert components (sulfur, nitrogen, oxygen or minerals etc.). Other important sources for the production of hydrogen such as vacuum residue (c), naphtha (d) or hydrogen-rich offgases (e.g. coke oven gas (j), are also shown in Figure 15.

The yields actually achieved in industrial hydrogen production are quite different from the maximum possible theoretical yields. This, however, is not due to a low degree of conversion but to the fact, that the energy needed to produce hydrogen is usually supplied by the raw material itself. Technical and economic aspects of the production are dealt with in this chapter. For the latter not only the yield but also the prices of the feedstock and the investment costs for the plant are important. Because of the fact that (1) there are only small differences between the cost of hydrocarbons on the basis of heating value, (2) the investment costs for the production of hydrogen from light hydrocarbons are lower, and (3) yields from light hydrocarbons are higher, as shown in Figure 15, hydrogen is produced preferably from light hydrocarbons, if available.

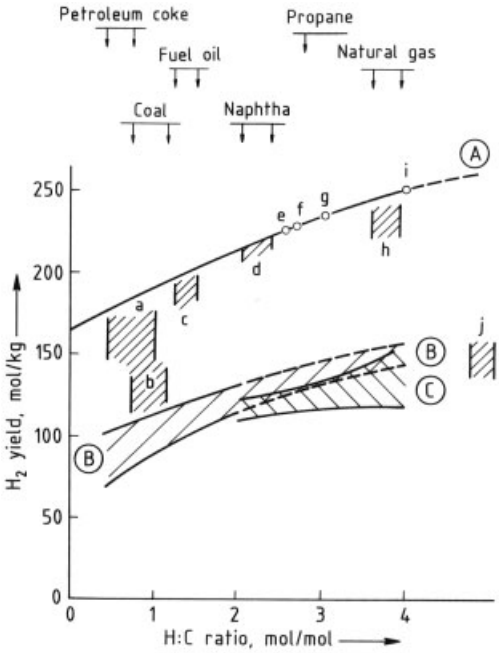

Figure 15. Hydrogen production from hydrocarbons and coal
A) Maximum theoretical yield from (a) hard coal, (b) bituminous coal, (c) vacuum residue, (d) naphtha, (e) butane, (f) propane, (g) ethane, (h) natural gas, (i) methane, (j) coke oven gas
B) Commercial production by steam-reforming, including fuel, no credit for export steamLower curve: small plants, ca. 500 m^3 (STP)/hUpper curve: large plants
C) Commercial production by partial oxidationlarge plants only
Upper curve: without oxygen production

4.1.1. Coke Oven Gas (see also → Coal Pyrolysis)

Coke oven gas (COG) was formerly a major source of hydrogen. Coke oven gas provided, in conjunction with water gas, almost all of the hydrogen for ammonia synthesis and for coal liquefaction (→ Coal Liquefaction) in the first half of this century. While the demand for hydrogen has risen sharply since 1950, the production of coke has been reduced. New production techniques for steel as well as reduced steel production in most industrialized countries have led to a decreasing market for coke and COG. Producing iron by direct reduction of iron oxide pellets with synthesis gas, for example, requires no coke at all. Nevertheless COG is, where available, an important and convenient source of hydrogen, but on the whole, production from coke oven gas has now been replaced by more effective hydrocarbon-based processes and by coal gasification.

Modern coke oven plants produce ca. 350 m^3 (STP) of coke oven gas per tonne of coal (15.6 mol/kg). 45 % of the raw COG produced is utilized to fire the coke oven batteries and supply other energy requirements of the coke oven plant. The rest can be used as a source of hydrogen or exported as a fuel gas. It can be expected that further developments and better heat management within the coke oven plant will raise the amount of excess gas up to 70 % of the total gas produced [50].

Raw Gas Treatment. Coke oven gas leaves the coke oven batteries at 750 – 850 °C and approximately atmospheric pressure. The main impurities which have to be eliminated are tar, several heavy to medium oil fractions with a high aromatic content, hydrogen cyanide, ammonia, organic and inorganic sulfur compounds, naphthalene, nitrogen oxides and water. The concentrations of the impurities vary with the kind of coal and the type and duration of the coking process. Several proprietary techniques for cleaning of raw COG are available [51, 52]. Typical cleaning steps are:

1) Quench cooling to ambient temperature (15 – 30 °C) and separation of the oil and naphthalene fractions,
2) First raw gas compression,
3) Absorption of hydrogen cyanide, ammonia, and sulfur compounds,
4) Second raw gas compression

Pretreated COG contains 50 – 60 % hydrogen (see Table 12).

Separation of Hydrogen from Pretreated COG. The separation of hydrogen from pretreated COG has been accomplished in two different ways.

Low-Temperature Condensation. Conventionally, hydrogen is separated by a low-temperature condensation process. Condensation of methane, ethylene and other compounds with a higher boiling point is carried out in regenerators (large vessels filled with ceramic materials) at elevated pressures (0.5 – 1 MPa) and low temperatures (60 – 70 K).

The hydrogen purity attainable is 96.5 %. Utilizing the low temperatures, hydrogen can be further cleaned in a liquid nitrogen scrubber (see Section 5.1.3), where the residual methane, carbon monoxide and oxygen content can be reduced down to low levels. In the nitrogen scrubber, the gas can be conditioned for ammonia synthesis gas production (25 % N_2, 75 % H_2).

By fractionating the primary condensate from the regenerators ethane, ethylene, propane, and fuel gas can be obtained as byproducts along with hydrogen or ammonia synthesis gas.

Plants with capacities up to 3×10^5 m^3 (STP)/h have been built using this type of technology.

Pressure Swing Adsorption. Pure hydrogen can be recovered at much lower investment costs in modern pressure-swing adsorption (PSA) plants (→ Adsorption, Chap. 7.2). A first industrial-scale plant with 10 000 m^3 (STP)/h capacity was put into operation in the German Ruhrgebiet in 1982. Figure 16 shows the principal steps of the plant.

After compression, higher hydrocarbons and sulfur compounds are separated from the raw gas by a preadsorption stage. Separation of hydrogen from the other gas components occurs in an adsorption process with four or more beds (see Section 5.2).

Special precautions must be taken to avoid accumulation of oxygen on the adsorbent. Part of the oxygen remains in the product gas and is converted to water in a special reactor (see Section 5.3.3 for Deoxo reaction). Hydrogen is

Table 12. Range of composition for precleaned coke oven gases and production of hydrogen from typical gas by pressure swing adsorption

Components	Range of composition, vol %	Typical composition, vol %	Hydrogen product, vol %	Fuel gas, vol %
H_2	50 – 64	57	99.9*	22
N_2	3 – 12	3	0.09	5.5
CO	4 – 8	6.5	<10 ppm	12
CO_2	1 – 5	3	< 1 ppm	5.5
CH_4	24 – 27	26	0.01	47
C_2H_4	1 – 3	2		4
C_2H_6	0.7 – 2	1		2
C_3H_6	0.3 – 0.6	0.5		1
C_6H_6	0.5 – 1	0.8		1
O_2	0.1 – 0.5	0.1	<10 ppm	
H_2S + COS	0.1 – 0.8	0.1	<10 ppm	
Organic sulfur, g/kmol	0.5 – 10	2		
Total		100	100	100
LHV, kJ/mol	370 – 460	440	245	588
HHV, kJ/mol	420 – 520	490	286	645
Typical flows with pressure swing adsorption, m^3 (STP)/h		100	45	55

* Possible up to 99.999 %.

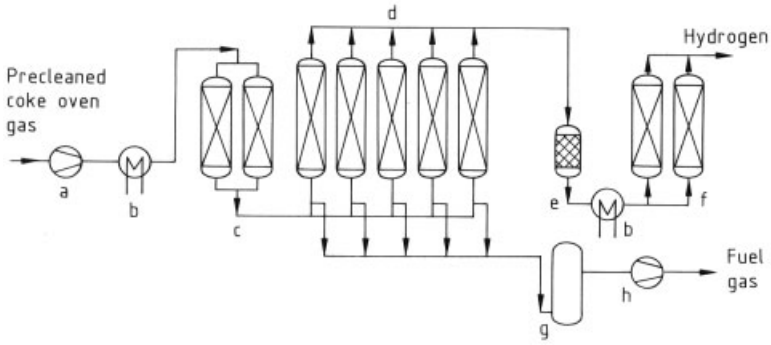

Figure 16. Hydrogen production from coke oven gas by pressure swing adsorption (Linde, Federal Republic of Germany) a) Raw gas compressor; b) Cooler; c) Preadsorption (regeneration not shown); d) Pressure swing adsorption; e) Oxygen removal; f) Water removal; g) Rest gas equalizer; h) Fuel gas compressor

then dried in another adsorption process yielding a purity >99.9 %, before it is delivered to a hydrogen pipeline system (see Chap. 7).

About 80 % of the hydrogen is recovered by this process. Thus, depending on the initial composition, the gas volume is reduced by 40 – 50 % on producing pure hydrogen. However, the residual gas, which is usually used for firing the coke oven batteries or otherwise as a fuel gas, has a lower heating value (LHV) of ca. 587 kJ/kmol so that recovery of the valuable hydrogen product stream leads only to a 20 – 30 % drop in the total heat content of the remaining fuel gas (see Table 12).

Proposed Technology for Production of Hydrogen from COG by Chemical Processes. A higher hydrogen yield could be obtained, if the hydrocarbons in the raw or pretreated COG were converted to hydrogen.

Catalytic processes for this purpose are *steam-reforming* and *autothermic* processes (see Section 4.1.3). Both processes run best when the sulfur content is low and unsaturated and cyclic hydrocarbons are absent. This requires multistage precleaning processes, which are technically feasible and often used for other applications (→ Gas Production). For COG, however, they have not yet been commercially applied so

far though they have been frequently proposed [53, 54].

Partial oxidation of COG (see Section 4.1.2) has also been proposed [52]. But, because of difficulties with the low initial pressure (approx. atmospheric) and the periodical changes in amount and composition of COG, no commercial application has been reported.

The above refers to COG from hard coal only. Similar aspects apply when gas from *coking operations* in refineries (see Section 4.1.4) or from modern *pyrolysis* processes of hard coal, lignite, organic materials (straw, refuse, etc.) is considered as a source of hydrogen.

4.1.2. Gasification of Coal and Hydrocarbons

4.1.2.1. Coal Gasification

For the production of hydrogen or hydrogen-rich gas streams coal gasification is usually performed with oxygen (purity $> 95\,\%$) at high temperature and elevated pressure. Coal gasification is described in detail elsewhere ($\rightarrow$ Gas Production). Here, only aspects relevant to the production of hydrogen and hydrogen-rich gases are dealt with.

Coal gasification on an industrial scale produces:

1) Synthesis gases, rich in carbon monoxide and hydrogen, e.g., gas for Fischer-Tropsch synthesis of gasoline at SASOL, South Africa ($\rightarrow$ Coal Liquefaction), [55];
2) Synthesis gas for the production of acetic anhydride at Tennessee Eastman, United States [56];
3) Ammonia synthesis gas: $3\,H_2 + N_2$, e.g., Modderfontein, South Africa [57];
4) Substitute natural gas $>90\,\%\,CH_4$, e.g., North Dakota, United States [58];
5) Medium- and low-Btu fuel gas for combined-cycle processes [59] consisting of hydrogen, carbon monoxide, methane, carbon dioxide. The gas may also contain considerable amounts of inerts (nitrogen, argon), if gasification is performed with air.
6) Pure hydrogen (hydrogen content $> 95\,\%$) from a side stream of a synthesis gas unit [60].

All coal gasification processes can be used to manufacture hydrogen. The highest yield in the primary gasification step, however, is achieved, if pulverized coal is gasified with oxygen at high temperatures. This is done in the entrained-bed gasification reactor, commercialized especially in the Koppers – Totzek and the Texaco process.

The most important process steps are shown in Figure 17 for the Texaco coal gasification process.

Gasification temperatures $> 1300\,^{\circ}C$ result in a synthesis gas which contains only minor amounts of methane and other hydrocarbons. The chemical equilibrium at these temperatures leads to a gas containing mainly hydrogen and carbon monoxide (see Table 13). The latter can be shift converted to hydrogen (see below).

Gasification pressure affects the hydrogen yield and the economics of the process. Whereas the yield of hydrogen is slightly reduced, the economics are improved at high pressure because hydrogen is usually utilized at higher pressure. Modern gasification processes, therefore, are operated at least at 2 MPa. The negative effect on the hydrogen yield can be offset by a slight increase in temperature.

Table 13 shows the operating conditions of several commercial gasification processes. Since different coals have been gasified, the hydrogen yields cannot be compared directly. However, the influence of gasification temperature on hydrogen yield and the formation of byproducts can be clearly seen.

Principally, all types of coal can be gasified to produce hydrogen, although certain constraints associated with the gasification process or the characteristics of the coal have to be considered. The gasification of *petroleum coke* in a fluidized bed gasifier has been proposed [61] and the gasification of coke from *tar sands* has been successfully tested in an entrained bed gasifier [62].

Gasification of other solid fuels such as peat, wood, refuse, or sludge from wastewater treatment plants leads to a low-Btu gas, which is less suitable for the production of hydrogen. Because of the high moisture and oxygen content of the raw material, these gases are generally used on the plant site for heat or electricity production. In Finland one plant is in operation since 1988 which produces ammonia synthesis gas from peat, employing a high temperature Winkler gasifier ($\rightarrow$ Gas Production) [63].

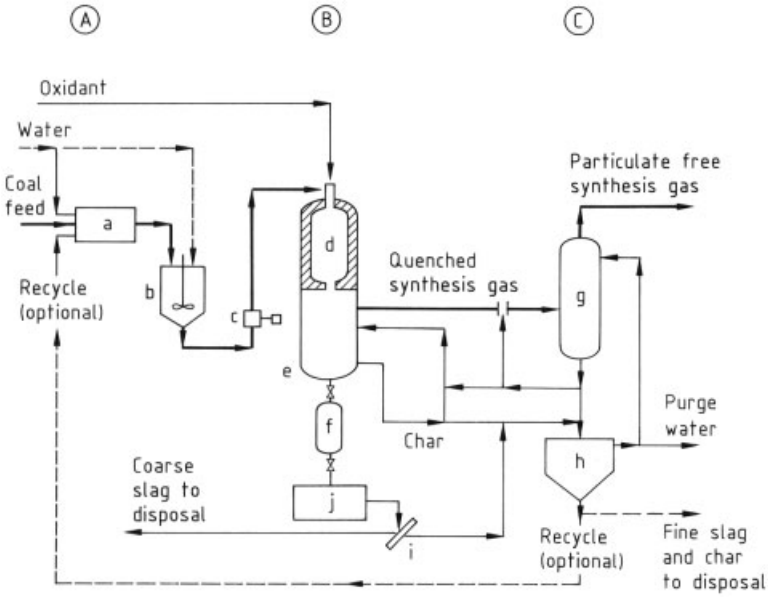

Figure 17. Texaco coal gasification process; direct quench mode of operation
A) Coal grinding and slurry preparation; B) Gasification and gas cooling; C) Gas scrubbing
a) Coal grinding mill, b) Slurry tank; c) Slurry pump; d) Texaco gasifier; e) Quench chamber; f) Lockhopper; g) Particulate scrubber; h) Clarifier; i) Slag separator; j) Slag sump

Research and Development. Commercial conditions, namely the low crude oil prices in the 1980s, have prevented further development of new coal gasification processes developed in the 1970s from bench-scale experiments to commercial-scale processes. Instead research has aimed at making the established processes more reliable. Further progress has been made in improving the purification steps from the raw synthesis gas to pure hydrogen (see Chap. 5).

4.1.2.2. Gasification of Liquid and Gaseous Hydrocarbons

Partial oxidation of hydrocarbons in general is described in detail elsewhere (→ Gas Production, Chap. 3.2). For the production of hydrogen, the Texaco and the Shell partial oxidation (PO) processes are applied commercially [64 – 67].

The principal steps of an oil gasification process (Texaco process) are similar to the coal gasification depicted in Figure 17. The Shell process differs in details such as the burner construction, the reactor cooling, the waste heat boiler and the soot recycle. Some more details of both processes are given as follows:

Feedstock	Problems
High boiling point fractions	Cracking and carbon formation on heating, high pressure drops at high viscosity
Solid residues	Slurrying hydrophobic residues, high demands on the burner
High metal content	Corrosion and metal deposition in down-stream equipment
Ash and slag content	Mechanical equipment for solid removal, melting point of the ash, eutectic formation with brick work, wear by erosion
Treatment of carbon deposits	No recycle: carbon loss, disposal problems Recycle: metal content build-up
Heat recovery	Quench: reliability, direct steam production for shift conversion applied with: H_2 production Waste-heat boiler: high steam production rate; applied with: synthesis gas production

Heavy residues from petrochemical processes are the preferred feedstocks for the production of hydrogen and carbon monoxide-rich gases. Oil fractions with high sulfur and/or high heavy metal contents are difficult to handle in upgrading processes such as hydrogenation or coking. For environmental reasons they should not be used as fuels. In principle, hydrogen can be produced by PO processes from all hydrocarbons. The production, however, is only eco-

Table 13. Hydrogen production by coal gasification. Effect of gasification pressure, temperature and operation mode

	Low temperature gasification	Medium temperature gasification	High temperature gasification
Feedstock			
Coal type	North Dakota lignite	Bituminous coal	Bituminous coal
Volatile matter, wt %	26.9	34.3	33.5
Fixed carbon, wt %	30.6	50.2	41.7
Moisture, wt %	36.2	5.0	13.0
Ash, wt %	6.3	10.5	11.8
Carbon, wt % (waf*)	73.9	83.6	76.7
Hydrogen, wt %	5.2	5.7	5.9
Oxygen, wt %	18.9	6.8	12.6
Nitrogen, wt %	1.0	1.6	1.1
Sulfur, wt %	1.0	2.0	3.7
Gasification conditions			
Operating pressure, MPa	3.1	3.0	2.0 – 8.0
Operating temperature, °C	700 – 800	950	1250 – 1400
Ratio: steam: oxygen, kg/m^3 (STP)	6.9	1	1
Oxygen consumption per crude gas, m^3/m^3 (STP)	0.13	0.2	0.32
Crude gas yield, m^3 (STP)/t waf*	2000	2200	2200
Raw gas composition			
H_2, vol %	39.3	28.0	35.8
CO, vol %	15.8	56.4	44.6
CO_2, vol %	31.5	3.0	18.0
CH_4, vol %	11.8	7.1	0.0
C_{2+}, vol %	0.8	0.4	0.0
N_2/Ar, vol %	0.4	4.3	0.5
H_2S/COS, vol %	0.4	0.8	1.1
Other	ammonia, benzene, phenolics, tar, organic acids		
Commercial processes	fixed bed/slow moving bed gasification processes: Lurgi, Wellmann – Galusha	fixed bed/slow moving bed: British Gas – Lurgi, fluidized bed: Winkler Hygas,	entrained bed gasification: Texaco, Shell, Koppers – Totzek

* waf = water and ash free.

nomically viable if heavy residues are utilized. (see Section 4.6 for an economic comparison of hydrogen-producing processes).

Gaseous hydrocarbons are also occasionally converted to hydrogen and carbon monoxide in PO processes. This is done, if the gases cannot be processed by catalytic steam reforming (see Section 4.1.3) because of high concentrations of certain impurities such as olefins and H_2S or if the process must handle various feedstocks from natural gas up to fuel oils. Another incentive to use PO for the conversion of gaseous fuel is the possibility to obtain synthesis gas with a high carbon monoxide content.

The overall reactions during partial oxidation are as follows (heat of reaction see Table 14):

Oxidation reactions

$$\mathrm{C}_m\mathrm{H}_n\mathrm{S}_o + m/2\,\mathrm{O}_2 \rightarrow m\mathrm{CO} + (n/2-o)\,\mathrm{H}_2 + o\mathrm{H}_2\mathrm{S}\ \text{(exothermic)} \quad (1)$$

$$2\,\mathrm{C} + \mathrm{O}_2 \rightarrow 2\,\mathrm{CO}\ \text{(exothermic)} \quad (2)$$

Crack reaction

$$\mathrm{C}_m\mathrm{H}_n\mathrm{S}_o \rightarrow (n/4-o/2)\ \mathrm{CH}_4 + (m-n/4+o/2)\,\mathrm{C} + o\mathrm{H}_2\mathrm{S}\ \text{(endothermic)} \quad (3)$$

Water gas reaction

$$\mathrm{C} + \mathrm{H}_2\mathrm{O} \rightarrow \mathrm{CO} + \mathrm{H}_2\ \text{(endothermic)} \quad (4)$$

Shift reaction

$$\mathrm{CO} + \mathrm{H}_2\mathrm{O} \rightarrow \mathrm{H}_2 + \mathrm{CO}_2\ \text{(exothermic)} \quad (5)$$

Methane reforming

$$\mathrm{CH}_4 + \mathrm{H}_2\mathrm{O} \rightarrow \leftarrow \mathrm{CO} + 3\,\mathrm{H}_2\ \text{(endothermic)} \quad (6)$$

The reactions of the hydrocarbon feedstock with substoichiometric amounts of pure oxygen (oxygen content $> 95\,\%$) follow Equation (1). Other reactions, which take place simultaneously or immediately following, are the water gas reaction (Eq. 4), the CO shift (Eq. 5) and the methane formation or decomposition reaction (Eq. 6).

Table 14. Equations and reaction enthalpies for the most frequent reactions occurring during catalytic steam reforming and their technical conditions [78]

	ΔH at 101.3 kPa, 298 K, kJ/mol	Technical reaction conditions			
		Start of reaction at t, °C	End of reaction at t, °C	Reaction pressure, MPa	Heat of reaction ΔH, kJ/mol
Reforming reactions					
$CH_4 + H_2O \longrightarrow CO + 3\ H_2$ (7)	206.36	500	870	2.0	234.66
$CH_4 + 2\ H_2O \longrightarrow CO_2 + 4\ H_2$ (8)	165.13				
$C_2H_6 + H_2O \longrightarrow CO + CH_4 + 2\ H_2$ (9)	141.22	500	870	2.0	166.56
$C_2H_6 + 2\ H_2O \longrightarrow 2\ CO + 5H_2$ (10)	347.50	500	870	2.0	131.68
$C_3H_8 + H_2O \longrightarrow C_2H_6 + CO + 2\ H_2$ (11)	150.68	500	870	2.0	179.24
$C_3H_8 + 2\ H_2O \longrightarrow CH_4 + 2\ CO + 4\ H_2$ (12)	291.99	500	870	2.0	335.10
$C_3H_8 + 3\ H_2O \longrightarrow 3CO + 7H_2$ (13)	498.36	500	870	2.0	563.64
Shift reaction					
$CO + H_2O \longrightarrow CO_2 + H_2$ (14)	−41.16	220	250	2.0	−37.19
		350	420	2.0	−36.48
Oxidation reaction					
$C + O_2 \longrightarrow CO_2$ (15)	−196.89				
$2\ CO + O_2 \longrightarrow 2\ CO_2$ (16)	−566.37	800	1000	2.0	−542.58
$2\ H_2 + O_2 \longrightarrow 2\ H_2O$ (17)	−484.17	800	1000	2.0	−480.06
$CH_4 + 2\ O_2 \longrightarrow 2\ H_2O + CO_2$ (18)	−803.04	300	1400	0.1	−646.83
$2\ C_2H_6 + 7\ O_2 \longrightarrow 6\ H_2O + 4\ CO_2$ (19)	−2857.6	300	1400	0.1	−2329.2
$C_3H_8 + 5\ O_2 \longrightarrow 4\ H_2O + 3\ CO_2$ (20)	−2045.4	300	1400	0.1	−1673.9
Soot formation reactions					
$CH_4 \longrightarrow C + 2\ H_2$ (21)	74.9				
$2\ CO \longrightarrow C + CO_2$ (22)	−172.54				
Carbonyl formation					
$Ni + 4\ CO \longrightarrow Ni(CO)_4$ (23)	−159.50				
$Fe + 5\ CO \longrightarrow Fe(CO)_5$ (24)	−233.20				

The reactions take place primarily in the flame and in the empty brick-lined reactor. The residence time is usually <5 s, the temperature 1250 – 1500 °C. Pressure is often adjusted to accomodate subsequent processes, 3 – 12 MPa being the usual range.

The subsequent formation of hydrogen by the water – gas shift reaction (Eq. 5, see also Section 5.3), is of equal importance for hydrogen production as is the immediate formation of hydrogen (Eq. 1). Carbon monoxide is thereby shifted to hydrogen to the highest degree possible. The shift reaction occurs simultaneously to the oxidation-gasification reactions at temperatures > 1200 °C without the presence of catalysts. Higher hydrogen yields, however, can be achieved by attaining equilibrium at 200 – 500 °C in the presence of steam and suitable catalysts.

Two process routes have been applied to perform the cooling down, gas purification and shift reaction:

1) The classical sequence of the three aforementioned process steps calls for a two-stage physical scrubbing process (e.g., the Rectisol wash, see Section 5.4). The process gas from the partial oxidation reactor is cooled in a waste-heat boiler thus producing high pressure steam. Soot and ash particles, as well as water-soluble components, are removed with a water quench at temperatures between 300 °C and ambient. Hydrogen sulfide is removed (e.g., at − 50 °C) in the first stage of a Rectisol absorption unit. The synthesis gas is then heated again to 300 °C and steam is added. The shift reaction occurs in a series of adiabatic reactors with intermediate cooling and decreasing inlet temperatures at each stage. After subsequent carbon dioxide removal in the second stage of the absorber the carbon monoxide content can be as low as 0.5 vol %. The catalyst, especially the one used at

the lowest temperature, is extermely susceptible to sulfur poisoning (see Section 5.2).

2) Since sulfur-tolerant shift catalysts have been developed (see Section 5.2), an alternative process has become possible. Here the high water content required in the gas for the CO-shift reaction is achieved by direct quenching of water into the raw gas. The shift reaction takes place in a series of adiabatic reactors without prior removal of sulfur. It has been proposed to replace them by one temperature-controlled, quasi-isothermic reactor [68]. The sulfur compounds hydrogen sulfide, carbonyl sulfide, and carbon dioxide are removed in a single stage Rectisol wash, which in its regeneration section can produce two separate fractions, namely a carbon dioxide and a hydrogen sulfide – carbon dioxide mixture. The CO content of the purified gas is <0.5 vol %.

4.1.2.3. Examples of Industrial Scale Hydrogen Production (by Partial Oxidation of Hydrocarbons)

Production of Hydrogen-Rich Ammonia Synthesis Gas. One example is the production of hydrogen-rich ammonia synthesis gas by partial oxidation of high-sulfur-content vacuum residue (→ Ammonia).

Starting from 44 t/h vacuum residue with a sulfur content of up to 4.5 wt %, 116 000 m^3 (STP)/h of 96 vol % pure hydrogen are generated. Hydrogen is further purified using a liquid nitrogen scrubber (→ Gas Production, Chap. 5.6.3), whereby 148 900 m^3 (STP)/h of ammonia synthesis gas with a composition H_2 = 75 mol % and N_2 = 25 mol %, is obtained. 56.25 t/h of ammonia can be produced from this synthesis gas.

Hydrogen from Residues of Upgrading Operations in Refineries [69, 70]. After optimization of many technical, environmental and economic parameters the process sequence in Figure 18 consists of the following steps:

1) *Air Separation*	Molecular sieve unit (because of the high air pollution at the site) External compression of oxygen to 7.5 MPa
2) *Gasification*	Texaco combined reactor in two parallel trains (special arrangements to cope with high ash concentrations in the feedstock)
3) *Soot extraction*	100 % soot recycling, using the Texaco naphtha soot extraction system No special extraction oil required Vertical decanter
4) *Carbon monoxide converter*	3 beds with cobalt – molybdenum sulfide catalyst with a residual carbon monoxide concentration of 0.5 vol %. Waste-heat recovery for steam generation and other uses within the plant
5) *Sour gas absorber*	Single-stage selective Rectisol absorber, two parallel absorbing columns for converted and carbon monoxide-rich feed gas Purified streams of hydrogen, carbon monoxide, methanol synthesis gas and Claus fraction containing 70 % hydrogen sulfide
6) *Methanation*	Standard version with nickel catalyst and integrated zinc oxide bed.
7) *Carbon monoxide cold-box*	Single column apparatus with internal carbon monoxide recycle (cold-box = containment for low-temperature process)

Figure 18 shows the overall process layout.

4.1.3. Catalytic Reforming of Hydrocarbons

A comprehensive treatment of catalytic reforming is given elsewhere (see → Gas Production, Chap. 2). Here a brief outline of the most important industrial routes for hydrogen production is given.

4.1.3.1. Feedstocks

Hydrocarbons react with steam in an endothermic reaction to form carbon monoxide and hydrogen (Eq. 7, Table 14). The most important feedstock for the catalytic steam reforming process is natural gas. Other feedstocks are associated gas, propane, butane, liquefied petroleum gas and some naphtha fractions. The choice is usually made on the availability and the price of the raw material. Preference is given to lighter feedstock, if the price on a heating value basis is comparable. The reason for this is the better operability of plants using lighter feedstocks as well as the easier pretreatment operations, and thus the lower investment costs for comparable plants.

The chemical process is described by

$$C_nH_m + nH_2O \rightleftharpoons nCO + (n+m/2)\,H_2 \qquad (25)$$

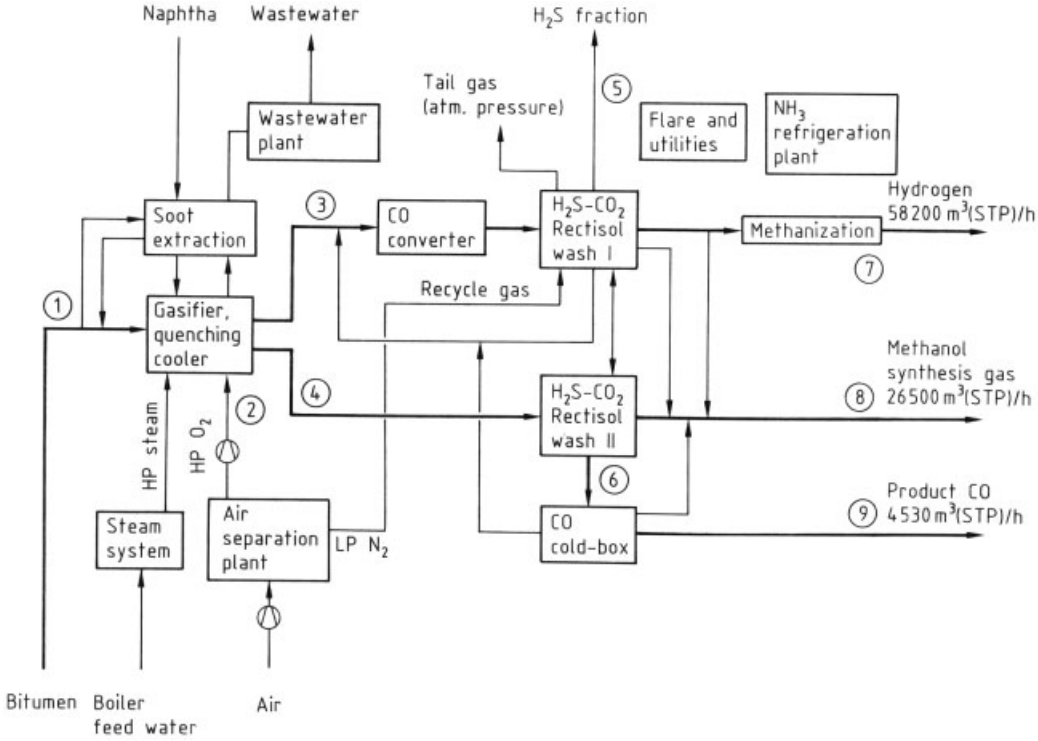

Figure 18. Gasification of refinery residue for the production of hydrogen, methanol synthesis gas, and carbon monoxide (Linde, Federal Republic of Germany)
Material balance: The numbers denote the process streams in the above Figure
1 *Feedstock*: Bitumen, $m = 33.3$ t/h, $p = 0.4$ MPa, $t = 150\,^{\circ}C$, density (25 °C) = 1.056, viscosity (150 °C) = 8 000 Pa s*Composition:* 83.02 wt % carbon, 10.19 wt % hydrogen, 0.41 wt % nitrogen, 6.31 wt % sulfur, 45 ppm nickel (max 75), 150 ppm vanadium (max 250), 1000 ppm ash (max 1500)

Gas balance:

Mol, %	2	3	4	5	6	7	8	9
H_2		19.52	38.40	0.02	48.22	98.43	67.86	0.03
N_2	0.1	0.05	0.10	4.26	0.12	0.12	0.10	0.20
CO		21.61	41.61		51.23		26.91	98.74
Ar	0.4	0.06	0.11		0.14	0.14	0.11	0.30
CH_4		0.13	0.25		0.29	1.17	0.22	0.73
CO_2		2.12	3.98	21.12			4.80	
H_2S		0.64	1.25	73.30				
COS		0.03	0.06	1.3				
O_2	99.5							
H_2O		55.84	14.24			0.14		
total	24 740	159	29 420	1 954	11 756	59 300	26 500	4
m^3(STP)/h		900						530
p, MPa	7.3	6.0	5.9	3.0	5.7	5.0	5.0	3.4
t, °C	120	240	170	40	−50	40	40	38

The shift reaction, where carbon monoxide, formed according to (25), reacts with excess water, occurs concurrently to this reaction. Additional hydrogen is formed by this exothermic process:

$$CO + H_2O \rightleftharpoons CO_2 + H_2 \qquad (14)$$

Standard enthalpies of some important reactions occurring during steam reforming are given in Table 14. The heat of reaction of the overall endothermic process is provided by indirect heating. In *autothermal reactors* (e.g., secondary reformers) the oxidation reaction (see Table 14) supplies the necessary energy. This reaction takes place simultaneously or in advance of the reforming reaction.

4.1.3.2. Tubular Reformer

The equilibrium of the hydrocarbon steam reaction (7) and the water-gas shift reaction (14) dictates the conditions that must be met to achieve maximum hydrogen yields:

high temperature at the end of the reactor
high excess of steam
low pressure

These conditions can be realized best, if the endothermic reforming reaction occurs in a fired tubular reactor at high temperature (800 – 900 °C) and low pressure. The process pressure varies between 1.5 and 3.0 MPa. The exact choice of the process conditions depends on reaction kinetics, mechanical and economical terms.

The amount of steam added to the hydrocarbon feedstock is quantified by the molar steam-to-carbon ratio (S/C = ratio of S moles of H_2O to C moles of carbon contained in the hydrocarbon feedstock. If present, carbon monoxide and sometimes also carbon dioxide, is calculated with the C moles). The S/C ratio has values from 2.5 to 6, depending on the feedstock and subject to process optimization considerations. The principals of the optimization of a steam reformer plant for the production of hydrogen are discussed in more detail in Section 4.1.3.3.

The next step is the shift reaction at ca. 340 – 450 °C (high-temperature shift). In certain cases this is followed by a second shift reaction at 200 – 250 °C (low-temperature shift).

Catalyst. In commercial plants steam reforming and the concurrent shift reaction are catalyzed by supported nickel catalysts. The catalyst contains 15 – 25 wt % nickel oxide on a mineral carrier. Carrier materials are α-alumina, aluminosilicates, cement, and magnesia. Before start-up, nickel oxide must be reduced to metallic nickel. This is done preferably with hydrogen but also with natural gas or even with the feedgas itself.

With certain types of catalyst uranium oxide and chromium oxide are used as a promoter. This is reported to give a higher resistance to catalyst poisoning by sulfur components and a lower tendency to form carbon deposits (according to Eq. 21 in Table 14). For special applications such as low-temperature reforming, noble metal catalysts have been developed [71]. They have not been used commercially so far.

For the feedstocks *LPG* and *naphtha*, nickel catalysts with alkaline carriers [72, 73] or alkaline-free catalysts with magnesium oxide as additive [74] can be used. Both types of catalyst are less active than the conventional nickel catalyst. Therefore, a less rapid decomposition of the hydrocarbons is achieved. At the same time, the reaction of water with any carbon formed (Eq. 4) is catalyzed. Catalysts with alkaline carriers are mostly used for the upper part of the reactor tube only. The second part of the reactor is filled with more active nickel catalyst. Whereas the first catalyst gradually decomposes the higher hydrocarbons, the active catalyst is more suitable for the methane-rich fractions formed in the upper part. The aforementioned combination of catalyst can also be employed with natural gas feedstock, thereby offering the opportunity to switch to LPG or naphtha in case of natural gas shortages.

Required properties of the catalyst carriers are high specific area, low pressure drop and high mechanical resistance at temperatures up to 1000 °C. The catalysts are usually in the form of rings (e.g., outer diameter 16 mm, height 16 mm, inner diameter 8 mm). Other forms, such as saddles, stars, and spoked wheels are also commercially available.

The main catalyst poison in steam reforming plants is sulfur, which is present in most feedstocks. Concentrations as low as 0.1 ppm form a deactivating layer on the catalyst [74]. To some extent activity loss of a poisoned catalyst can be offset by raising the reaction temperature. This helps to reconvert the inactive nickel sulfide to active nickel sites.

Worse than small constant sulfur concentrations are sulfur peaks in the feedstock. They lead to permanent deactivation of the catalyst and to mechanical problems because of carbon deposits.

Other catalyst poisons are chlorine and other halogen compounds as well as heavy metals, especially lead, arsenic, and vanadium.

Nickel-free catalysts have been proposed for feedstocks heavier than naphtha [75, 76]. These catalysts consist mostly of strontium, aluminum and calcium oxides. They seem to be satisfactorily resistant to coking and work with high-sulfur feedstocks. However, with these catalysts even at reaction temperatures as high as 1000 °C the methane concentration in the exit gas is so high, that a secondary reformer has to be installed [77].

Equilibrium Conditions and Kinetics. The reactions in commercial reformers lead to a product composition which is usually very close to the equilibrium of the shift reaction (Eq. 14 in Table 14) and of the methane reforming reaction (Eq. 7) for design purposes. The resulting gas composition corresponds to an equilibrium temperature, which is usually only 5 – 20 K below the measured actual outlet temperature.

Higher hydrocarbons than methane are not usually found in the outlet products of a steam reformer. The equilibrium composition can be calculated from equilibrium data given in [73] or [78] as a function of the temperature, pressure and S/C ratio. For the dependence of the equilibrium composition on pressure and temperature at one (undisclosed) S/C ratio see → Gas Production.

A review of the many aspects of intrinsic kinetics of methane steam reforming is presented [79]. For most practical conditions, ranges of S/C and pressures, first-order kinetics can be employed for methane reforming. For low conversions of methane, which is not typical for industrial use, the concurrent carbon monoxide shift reaction deviates from equilibrium.

For the design of the reforming reactor not only the reaction kinetics within the reformer tube are important, but also the pattern of heat input required for the endothermic hydrocarbon decomposition reactions.

Heat distribution in conventional reformers is influenced (1) by the geometry of burner arrangements, (2) the pitch of the tubes, (3) the type and length of the flame, (4) the radiation of the flames, flue gases and refractory walls, (5) size, shape and thickness of the tubes, (6) materials, and (7) whether the tube surfaces are machined. The calculation procedure for a standard type of hydrogen steam reformer is indicated in Figure 19.

The radiation conditions in the fire box depend on the temperature of the flue gas, the reformer tubes and the refractory walls, as well as their emissivities. A zonal computer program calculates the interaction among these three factors for the desired heat duty at a given tube skin temperature and results in the firing requirements. The effects of combustion, air or fuel preheat are also considered in this calculation.

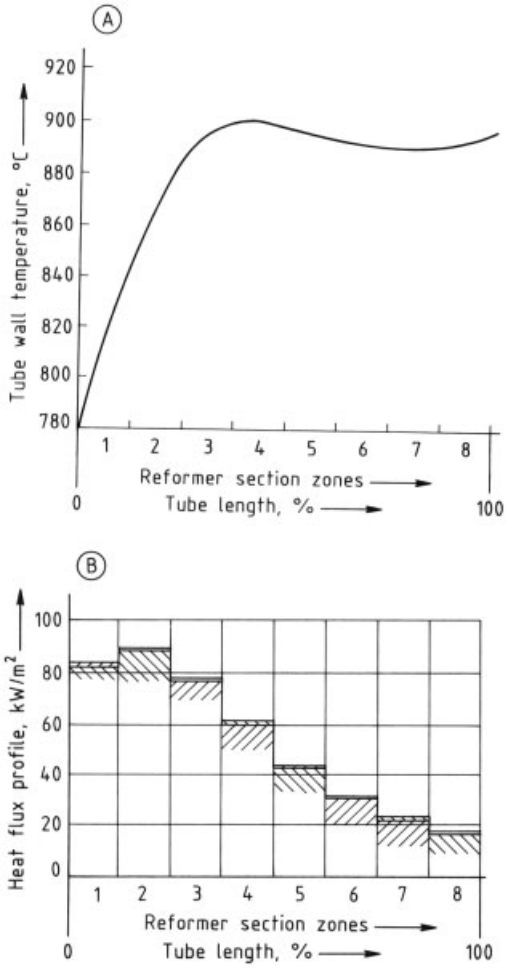

Figure 19. Tube wall temperature and heat flux in a reformer tube
A) Outer tube wall temperature vs. heat flux profile divided into, e.g., eight reformer sections
B) Hatched area: inclined to the right = heat requirements of the reaction; inclined to the left = heat provided by firing
Iteration for illustration purposes not completed

The given tube wall temperature is shown in Figure 19 A. The heat duty on the fire box side is shown for eight reformer section zones as one of the lines in Figure 19 B. The program which calculates the composition inside the reformer tube allows the heat requirements per length of tube to be calculated at the same time. This heat is supplied through the reformer tube wall and the given tube wall temperature determines the heat transferred to the inside of the tube. This is shown by the second line in the section zones of Figure 19 B. The aim is thus to find a tube skin

temperature profile which will supply the heat to the process as required, or, in other words, to match the heat flux profiles. When this is accomplished, the temperature profile along the tube and the firing rate have been determined. The former is important for the mechanical design of the tube, the latter for the utility consumption.

Other factors, such as heat losses, flame lengths, staged burning, flue gas recirculation, position of the flue gas outlet duct, circumferential and other tube temperature asymmetries, also play a role. Therefore it is essential that results be corroborated by field data and the programs adjusted accordingly to reflect the influence of the above mentioned factors.

The behavior of the radiant section can thus be predicted by the results of these calculations with sufficient accuracy. Literature has been published in this field [80 – 82]. However, some problems in heat and mass transfer, influence of pressure and the decomposition of higher hydrocarbons are still not completely resolved.

The utilization of the flue gas leaving the reformer is also of prime importance. An exact prediction of the temperature of the flue gas leaving the radiant zone (i.e., bridgewall temperature) is essential because it affects the firing duty (i.e. the amount of heat introduced to the reformer by firing), and thus overall performance of the reformer.

Numerous variations in the order of the heat exachanger coils are possible. Normally the excess heat in the flue gas is utilized to produce export steam. Whatever arrangement chosen, the overall thermal efficiency of reformer and convection zone can normally be expected to be ca. 92 %.

Carbon Deposits. Formation of carbon deposits occurs predominantly because of the decomposition of methane according to Equation (21) in Table 14.

$$CH_4 \rightarrow C + 2\,H_2$$

Other reactions leading to soot formation or carbon-coke deposits are cracking of higher hydrocarbons, especially aromatic compounds, and of olefins.

Another reaction leading to carbon deposition, the Boudouard reaction (22) in Table 14

$$2\,CO \rightarrow CO_2 + C$$

is favored by low temperature and high pressure typically found at the inlet portion of radiant tubes in a steam reformer.

Theoretically at least, carbon laydown can be predicted from the equilibria of Equations (21) and (22) if other carbon monoxide forming reactions such as the steam reforming (4) and the shift reaction (14), are also taken into account (see Table 14).

Since the early investigations of DENT [83] much has been published on the kinetics and conditions of carbon laydown on commercial and experimental catalysts in plants and in the laboratory [84 – 86]. As a result, several factors influencing soot formation in commercial steam reforming processes have been identified:

Choice of Catalyst. Acid sites on the catalyst and its support, e.g., nickel on silica, catalyze carbon formation. Alkaline supports and a spinel structure of the catalyst permit operation close to the soot limits of equilibrium conditions.

Feedstock Selection and Pretreatment. Olefins and aromatics lead to carbon deposits and catalyst deactivation even in regions which are carbon-free according to equilibrium conditions. Therefore, if the presence of these compounds cannot be avoided, a recycle of product hydrogen is often used to hydrogenate the unsaturated hydrocarbons. The hydrogen recycle ratio depends on the amount of unsaturated hydrocarbons expected and will often be ca. 3 – 5 mol % of the carbon content of the feedstock. Hydrogenation is usually performed simultaneously to the hydrogenation of sulfur containing compounds and the same type of catalyst (a sulfided cobalt or molybdenum catalyst) can be employed.

Kinetic Effects. High space velocities in critical regions also help to avoid soot formation.

Steam : Carbon (S/C) Ratio. Proper choice of the S/C ratio in steam reforming is imporant. Carbon formation is avoided if high S/C ratios are chosen because the equilibrium of the feed gas is shifted from the carbon regions. The S/C ratio also influences the hydrogen : carbon monoxide ratio of the product gas. This is important, if synthesis gas, not hydrogen, is to be produced. The shift reaction, which follows the reforming stage in hydrogen production plants and in many other applications, is also influenced by the S/C ratio. A high S/C ratio favors hydrogen production. At low S/C ratios, the

danger of hydrocarbon formation exists with subsequent carbon deposits in the high-temperature shift reactor. In the worst case reduction of the iron oxide catalyst may even occur.

Finally, economic evaluations indicate that the optimum S/C ratio tends to be low. Figure 20 shows that the feedstock consumption is slightly less at low S/C ratios. Because investment cost also declines with smaller gas flows, lower values of S/C are thus favored, although the aforementioned restrictions must be taken into account.

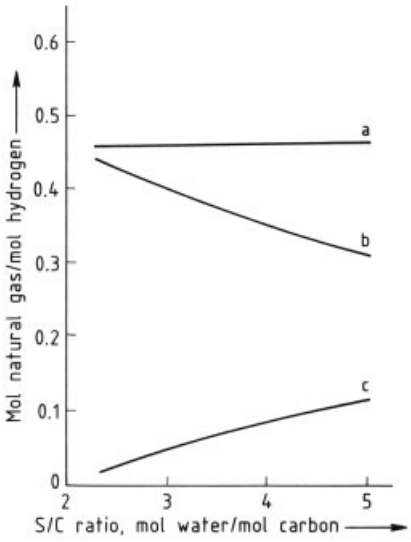

Figure 20. Consumption of natural gas in a modern hydrogen plant with PSA unit as a function of steam – carbon ratio
a) Total consumption of natural gas; b) Portion of natural gas used as process gas; c) Portion of natural gas used as fuel gas in addition to PSA off-gas [89]

Common values for natural gas operation are S : C 2.5 – 3, and for LPG and naphtha feedstocks S : C 3 – 5. If the desired product is not hydrogen, but carbon monoxide, the S/C ratio should be substantially lower.

Reformer Types. The aim of a reformer design for the production of hydrogen is to obtain a maximum temperature at the exit of the reformer tube and thus the maximum possible degree of reforming, using a minimum amount of fuel.

The fuel utilization is optimized, if the heat delivered to each section of the reformer tube corresponds to the heat requirements of the reaction in the tube. Various types of furnace and the geometry of the tubes and the burners in the furnace are shown in Figure 21 [87, 88].

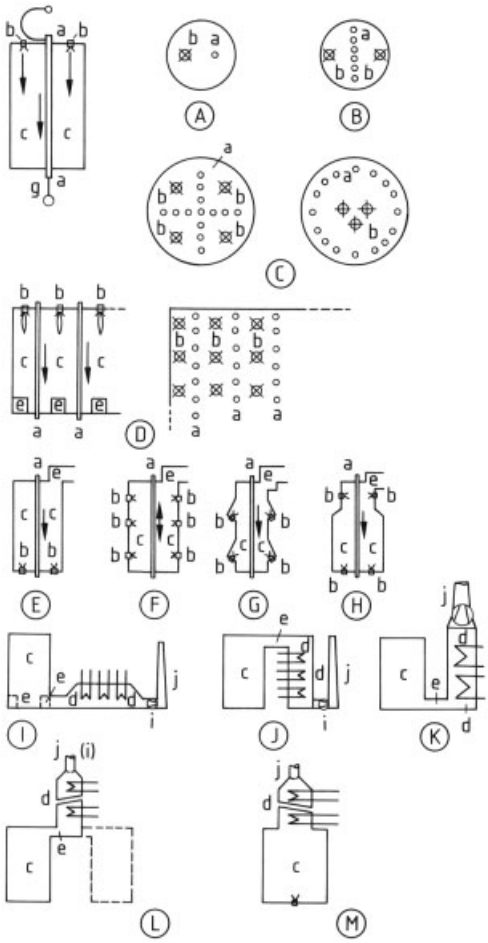

Figure 21. Types of steam reformer for hydrogen production; furnace and convection zone configurations
Cylindrical Furnaces: A) Small plants, pilot plants; B) Standard configuration; C) Tube/burner configuration for plants with higher capacity (up to 5 000 m^3 (STP)/h = 60 mol/s H_2); Process gas and flames (flue gas) usually cocurrent
Box Furnaces: D) Standard configuration; E) Bottom fired reformer; F) Side fired reformer; G) Terrace wall reformer; H) Combined configuration;
Convection Zone: I) Standard configuration, horizontal at grade; usually cocurrent flow of process gas and flames; J) Vertical configuration, downflow; K) Vertical configuration, upflow; L) Asymmetrical configuration; M) Central configuration;
a) Catalyst filled reformer tube; b) Burner; c) Radiation zone; d) Convection section; e) Fluegas duct; f) Inlet gas distribution system; g) Outlet gas tube (pig tail); h) Collector; i) Flue gas blower; j) Stack

For small reformer plants with a hydrogen capacity of up to 1000 m^3 (STP)/h (12.5 mol/s) cylindrical furnaces are often used. These furnaces require the least expenditure with regard to steel construction and insulation materials and can be prefabricated in the workshop. The plant size is then limited by the maximum transport dimensions.

Figure 21 C shows an arrangement, which accomodates a large number of tubes and allows a hydrogen production of up to 5000 m^3 (STP)/h (60 mol/s). Because of the varying distances of the tubes to wall and burner (see A and B) and because of the varying circumferential heat flux of each tube (C) an even heat flux distribution cannot be attained. This leads to designs with lower overall heat flux and shorter tube lengths for this type of cylindrical furnace.

For larger hydrogen plants box furnaces are well-proven. Often they can be prefabricated, so that a certain degree of preassembly is possible. The various types of box furnaces mainly differ in the arrangement of the burners. For hydrogen plants the usual configuration is the *top-fired* furnace (D), but *bottom-fired* (E), *sidewall-fired* (F) and *combined types* (G, H) are also in use. The box furnace allows a more even heat load distribution to each tube. The heat flux can therefore be increased.

Because the radiation is evenly distributed around the tube, the mechanical stress is minimized and larger tube diameters (up to 0.18 m outer diameter) can be used. The total number of tubes per quantity of hydrogen produced can thus be decreased. This reduces furnace volume, piping and the number of burners.

In almost all designs the process gas flows through the tubes from the top to the bottom. The hot outlet gas is usually gathered in a manifold system, which may or may not be lined, and led to the process gas boiler. This equipment is best placed at ground level. Three different arrangements are possible for the combination of process gas – flue gas flow.

Most modern reformers are *top-fired reformers* with cocurrent flow. Figure 22 A shows the temperature profile of the outer tube wall and the gas temperature in the tube interior. The high temperature attained rapidly at the beginning of the tube allows a high reaction rate over a large portion of the tube.

Sidewall-fired furnaces exhibit a very even flue gas temperature profile and allow a certain amount of freedom to adjust the tube wall temperature (see Figure 22 B).

The flue gas exit temperature with a *countercurrent* system is particularly low (see Figure 22 C), which indicates that a large fraction of the heat content of the flue gas has been utilized. This type is used preferentially whenever a furnace with the convection zone at the top, using natural draft, and with a low degree of further utilization of the heat content of the flue gas is envisaged.

Further critical items of steam reformers are:

1) The support of the tubes to minimize the load on the distribution system and to avoid bowing of the tubes.
2) The preheated gas mixture (ca. 500 °C) enters the reformer via the inlet distribution system. The distribution system must be designed to take up the vertical expansion of the reformer tubes (for example, a 14 m tube may expand by as much as 0.25 m under operating conditions).
3) The horizontal thermal expansion of the outlet collector must be compensated for by the connecting pipework, the so-called pigtails.
4) Equal gas distribution over the tubes is attained by proper hydraulic design of the inlet and outlet collectors coupled with uniform loading of the catalyst in the reformer tubes.
5) The ratio of tubes : burners in large top-fired reformers is ca. 4. Smaller numbers of burners have the disadvantage of uneven heat distribution to the tubes but the advantage of lower investments because of the reduction in piping and ducting.
6) Design of burner, insulation, flue gas duct and reformer geometry. For details see [90].

Only a fraction of the heat supplied to the reformer furnace is used for reforming. A large amount of the heat in the flue gas is carried into the convection zone, where it is used to preheat the reformer feed, to produce and to superheat steam and, depending on circumstances at the site, maybe to preheat the combustion air.

The convection section can be installed as shown in Figure 21 (I – M). In most large hydrogen plants a flue gas fan must be installed, to induce the slight vacuum necessary for the draft burners and to compensate for the pressure drop

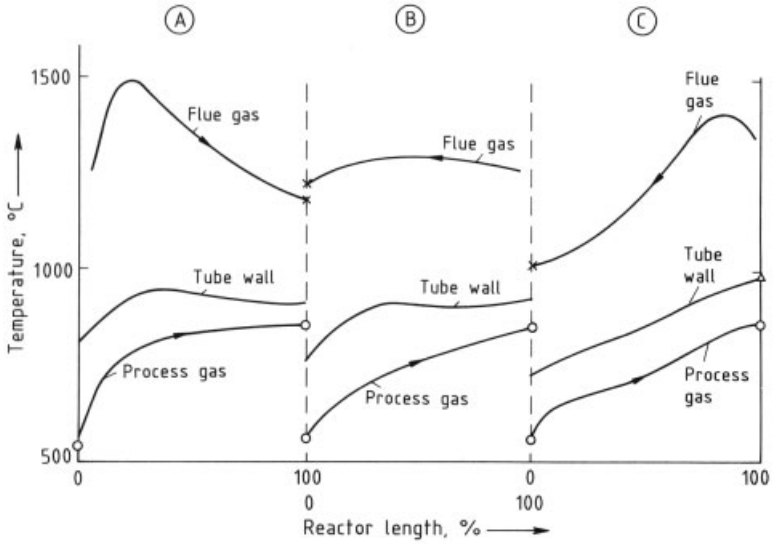

Figure 22. Temperature profiles in different steam reformer designs
A) Cocurrent flow; B) Sidewall-fired; C) Countercurrent flow
The upper curve shows the approximate flue gas temperature, the lower curve the temperature of the process gas, with an adjusted inlet temperature of 550 °C and exit temperature of 800 °C. The curve between shows the skin temperature of the tube wall, important for the mechanical design of the reformer tubes

over the heat exchanger coils in the convection section. For small plants, the convection section is sometimes installed on top of the reformer. This reduces the power requirements of the fan or allows design for natural draft.

The design of the convection section itself depends on the overall energy balance of the plant (see below) and the way the energy is to be utilized within the plant. This is influenced by the use of steam or electric drives or of gas turbines, etc. [91].

Energy Balance. The energy required for reforming in the furnace is (1) utilized as reforming energy and (2) in the convection section for preheating and steam production. In addition, energy losses such as insulation losses and the heat content of the flue gas lost through the stack must be considered. The efficiency factor for the steam reformer can be defined in several ways, for example:

Firebox Efficiency. The firebox efficiency is the ratio of energy necessary for reforming (Q_{R}) to the energy of fuel combustion (Q_{LHV}) (usually expressed in terms of the lower heating value of the fuel). If air or fuel are preheated it is necessary to consider the amount of energy brought in by preheated air Q_{A}, and/or preheated fuel Q_{F} to give:

$$\eta\ (\text{firebox}) = \frac{Q_{\mathrm{R}}}{(Q_{\mathrm{LHV}}+Q_{\mathrm{A}}+Q_{\mathrm{F}})}$$

Firebox efficiencies lie in the range 0.45 – 0.55. This value only gives the relationship of the distribution of the energy between radiant and convection section, not, however, the degree of energy utilization.

Furnace Efficiency. The energy utilization in firebox and convection section is characterized by the overall furnace efficiency. This is the ratio of the sum of the utilized energy for reforming Q_{R}, for steam production Q_{S} and for any further energy utilization in the convection zone (e.g., feed preheating and superheating, export steam superheating, economizer Q_{C}) to the total energy supplied to the firebox $Q_{\mathrm{LHV}} + Q_{\mathrm{A}} + Q_{\mathrm{F}}$:

$$\begin{aligned}\eta\,(\text{furnace}) &= \text{energy utilized/energy available}\\ &= \frac{(Q_{\mathrm{R}}+Q_{\mathrm{S}}+Q_{\mathrm{C}})}{Q_{\mathrm{LHV}}+Q_{\mathrm{A}}+Q_{\mathrm{F}}}\\ &= (1-\text{energy losses})\,/\,(\text{energy available})\end{aligned}$$

The efficiency thus defined usually lies between 0.85 and 0.93 for hydrogen plants. The insulation losses are ca. 300 – 400 W/m^2 in the furnace section and ca. 600 – 700 W/m^2 in the convection zone which, depending on the size of the plant, amounts to ca. 1 – 5 % of the fired

energy. The flue gas losses also vary with the size of the plant and the energy utilization and amount to 6 – 10 %.

Energy management plays a vital role in steam reformer design. The efficiency and the economy of the process are determined by the design variables, e.g., feedstock and fuel costs, bonus for export steam, use of electric or steam drives, S/C ratio, product gas pressure, etc. Suggestions for optimizing steam reformer plants can be found in the literature [92 – 94]. One typical example is discussed below.

4.1.3.3. Steam Reforming Plant

Figure 23 shows a simplified process flow diagram of a typical hydrogen plant. As in the majority of such plants, the feedstock is natural gas. Table 15 summarizes the process data. For the production of pure hydrogen, the following process stages are necessary:

Feed Preheating and Desulfurization. Usually, natural gas contains only small amounts of sulfur compounds, predominantly in the form of hydrogen sulfide. Because of the high sulfur sensitivity of the catalyst in the reformer (and in the LT shift reactor, if installed) hydrogen sulfide and other sulfur compounds must be removed on a zinc oxide bed (see Section 5.3). If higher organic sulfur compounds (mercaptans, thiophene) or carbonyl sulfide in concentrations in the ppm-range are present, the zinc oxide bed alone is not sufficient and the sulfur compounds are converted to hydrogen sulfide in a hydrogenation stage. The hydrogen necessary is taken from the product stream and amounts to ca. 5 % for natural gas (whereas for naphtha and LPG 10 % and 25 % H_2, respectively, is used). Hydrogen recycle and hydrogenation also lowers the amount of olefins in the feed. The excess hydrogen in the feed helps to keep the reforming catalyst at the top of tube in a reduced state.

For hydrogenation and desulfurization the inlet gas is preheated to 350 – 400 °C. The gas leaves the purification section with a sulfur content of <1 ppm at essentially the same temperature.

Steam Addition, Reaction and Cooling. Steam is added to the inlet feed to give a ratio of 2.5 moles of steam per mole of carbon. This mixture can be further preheated in the convection section to 520 °C without cracking occurring. Reforming takes place in the reformer tube, the outlet temperature being 850 °C. After the reaction the gas is cooled quickly, thereby producing steam in the process gas boiler.

Water Gas Shift Reaction and Gas Purification.

High-Temperature Shift Conversion. The gas cooled down to 350 °C in the process gas boiler still contains a fair amount of carbon monoxide which can be converted into hydrogen by the water-gas shift reaction (Eq. 14, Table 14). An iron-oxide based catalyst is used for this. The shift reaction is usually carried out in a one-stage adiabatic reactor. Since the reaction is exothermic, the process gas temperature rises to 400 – 450 °C so the conversion is incomplete.

Pressure-Swing Adsorption (PSA). After high-temperature shift conversion, the gas is cooled down to ambient temperature. Water is condensed and removed before the gas is fed to at least three (but up to twelve) parallel adsorbers, which run in a predetermined cyclic operation. The various purge and decompression gases of the adsorbers are led into a large buffer vessel to compensate for variations in pressure and gas concentrations and are subsequently fired in the reformer along with a small amount of fuel gas for trimming purposes.

Classical Process. In an alternative route after the HT shift, the so-called classical process, the gas is cooled to ca. 220 °C and fed into a low-temperature shift reactor; followed by a carbon dioxide scrubber (monoethanolamine or hot potash, see Section 5.4). The remaining impurities in the hydrogen, traces of carbon monoxide and carbon dioxide, are removed by a catalytic methanation step. Using this process, a hydrogen purity of 97 – 99 % can be attained (not taking the inert gases into account). Both process routes have been compared in the literature [92, 95, 96]. For pure hydrogen plants the PSA version has become standard. Plants are built according to the classical route only in special cases in which (1) the feedstock (natural gas, LPG, naphtha) is expensive, (2) a cheap fuel is available to fire the reformer, (3) carbon dioxide is a desired product, or (4) a hydrogen purity of $<$99.9 % can be tolerated. For the coproduction of carbon dioxide

Table 15. Mass balance of a typical steam reformer plant for the production of 5000 m^3 (STP)/h hydrogen. Feedstock: natural gas; byproduct: steam (3.0 MPa, 255 °C) 4700 kg/h (the numbers in Figure 23 denote the balance points)

	Feed, 1	Before desulfurization, 2	Reformer inlet, 3	Reformer outlet, 4	Pressure swing adsorption, 5	H_2 product, 6
H_2, vol %	0	4.8	1.1	51.9	74.6	99.99
N_2, vol %	1	1	0.3	0.2	0.25	0.01
CO, vol %	0	0	0	10.7	5.3	0
CO_2, vol %	0.5	0.5	0.1	5.1	14.8	0
CH_4, vol %	95	90.4	26.1	3.8	4.9	0
C_{2+}, vol %	3.5	3.3	1.0	0	0	0
H_2O, vol %	0	0	71.4	28.3	0.15	0
Quantity, m^3 (STP/h)	2160	2070	7160	10450	8180	5000.5
Temperature, °C	20	390	520	850	20	20
Pressure, MPa	2.0	1.9	1.9	1.7	1.6	1.5

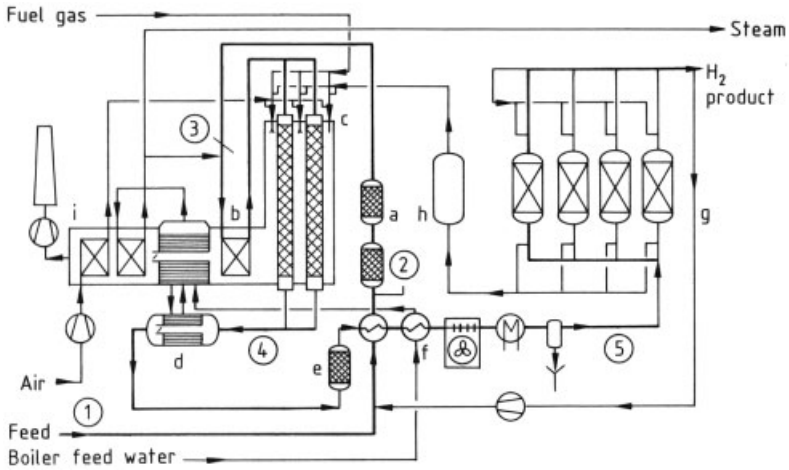

Figure 23. Hydrogen production by steam reforming, gas purification by pressure swing adsorption (Design: German Linde) a) Desulfurization; b) Feed preheater/superheater; c) Reformer; d) Waste-heat boiler; e) CO shift reactor (HT shift); f) Cooling of raw gas; g) Pressure swing adsorption; h) Off-gas puffer for fuel; i) Convection zone with steam production, steam superheating, and air preheating

combinations of both processes have also been built.

Heating, Steam Production, Heat Management. In Figure 23 the fuel gas is essentially the purge gas of the PSA plant. In addition, small amounts of the feed gas are fired. The combustion air is preheated in the convection section up to 500 °C. The process gas boiler and the flue gas boiler produce the required process steam. Depending on the design conditions of the plant, export steam is available for other users. From the point of view of the heat balance, a hydrogen plant can be optimized to be self-supporting, for maximum production of export steam, for minimum hydrocarbon consumption, etc.

4.1.3.4. Special Designs

The general design of tubular steam reformers has changed little in the past 20 years. In particular new materials for reformer tubes, heat exchangers and insulation as well as better and fewer burners and a better heat management have led to a highly sophisticated type of plant with an excellent efficiency and reliability.

Nevertheless, many new designs have been developed although their economic importance is so far very limited. The main areas for improvement of the reformer are:

improvement of the heat transfer for the endothermic reaction,
reduction of the plant size,
reduction of the maximum temperature (at the burner and in the flue gas).

Pressurized Fireboxes. The pressure in the fireboxes of conventional tubular reformers is atmospheric or slightly below. The reasons for this are:

1) Simple construction and safe operation of the reformer furnace,
2) Simple sealing of large numbers of reformer tubes,
3) Purge gas (e.g., from the PSA) can be fired at the low pressure,
4) Induced draft burners or burners using combustion air at low pressures can be used.

The use of higher pressure in the firebox leads to higher heat transfer coefficients from the flue gas to the reformer tube by convection. Figure 24 shows the construction of such a reformer and a similar heat exchanger concept [97, 98].

The catalyst is contained in the concentric space between the tubes so that the thermal expansion caused by start-up and shut-down of the reformer tube does not lead to sealing problems. Pressure on the flue gas side is 300 – 500 kPa [99]. One disadvantage is that both fuel gas and combustion air must be compressed. Plants with a hydrogen capacity of 120 – 5000 m^3 (STP)/h (1.5 – 60 mol/s) have been built.

Helium-Heated Reformers. To utilize the heat of the high-temperature nuclear reactor for the production of hydrogen from methane, a reformer with helium heating has been suggested. Since the helium temperature at the present stage of development is 900 °C, only a small temperature difference is available for the heat transfer. The reformer is similar to a conventional tube bundle reactor [100], however, the construction is very complex for safety and other considerations. Principally speaking, the reactor and heat exchanger could be used for other endothermic reactions. Up to now, only two prototypes with a capacity of 0.8 and 10 MW have been in operation. The helium is heated electrically in these plants.

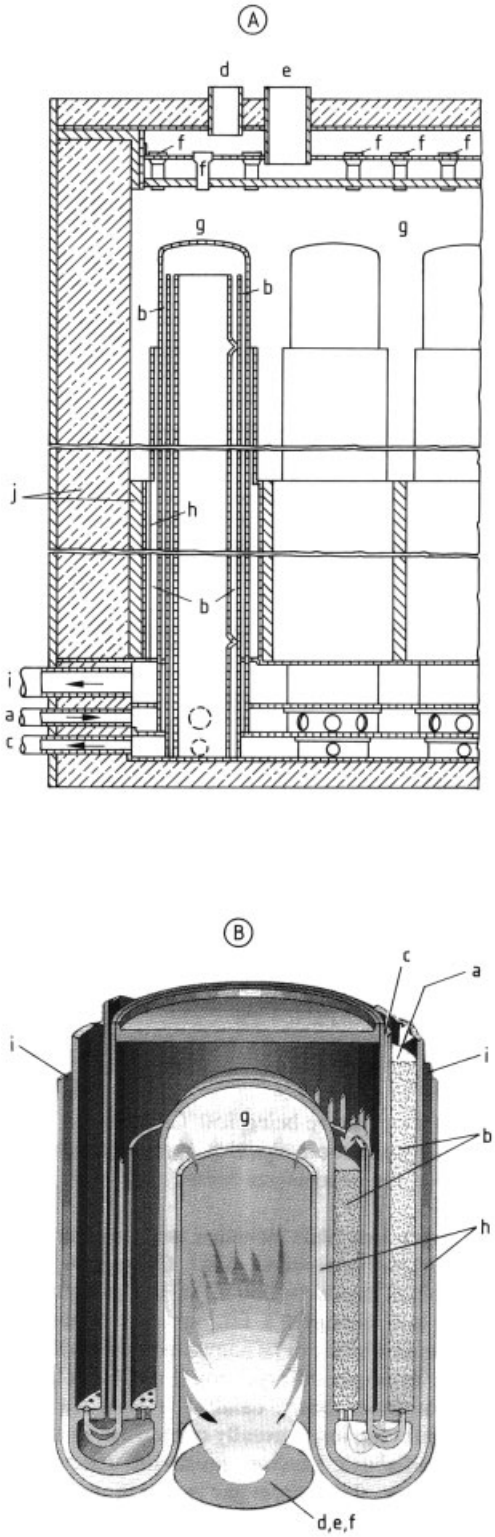

Figure 24. Pressurized and heat exchange type reformers
A) KTI (Kinetics Technology International BV), United Technology Corp. version [99]; B) Haldor Topsøe AS, Denmark [97, 98]
a) Gas inlet; b) Reaction zone (circular zone[s]); c) Reformed gas outlet; d) Heating gas inlet; e) Combustion air; f) Burner; g) Radiant section; h) Section with forced convection; i) Flue gas outlet; j) Insulation

Electrically Heated Reformers. For the production of small quantities of hydrogen electrically heated reformers have been suggested [101]. The hot product gas is used to heat the feed gas and produce part of the steam required. The energy requirement of ca. 300 kJ per mole of hydrogen is less than for a conventional steam reformer or for the electrolysis, whereby 80 kJ are brought in electrically and 220 kJ correspond to the lower heating value of the hydrocarbon used. However, it should be pointed out, that fossil and electrical energy can be compared on an equivalent basis only under special conditions.

Steam Reforming with Integrated Hydrogen Separation. High-temperature-resistant membranes have been integrated in a tubular reformer. Thus, hydrogen is withdrawn from the reaction mixture as it is formed. The chemical equilibrium is permanently shifted towards a higher feedstock conversion. For this reason either lower temperatures can be used or higher yields can be obtained. Palladium foil (100 μm) on a porous cylinder inserted into the reformer tube has been suggested as a suitable membrane. A small laboratory-scale plant has been built and successfully tested [102].

4.1.3.5. Autothermal Reactors

In autothermal reactors (secondary reformers) the energy for the production of carbon monoxide and hydrogen is produced by catalytic partial oxidation of part of the feedstock.

This type of reactor is employed:

1) to achieve high equilibrium temperatures (up to 1000 °C) thus minimizing methane concentration,
2) to enable use of elevated pressures (up to 5 MPa) together with high equilibrium temperatures (900 – 1000 °C) not feasible in fired steam reformer tubes,
3) to introduce nitrogen for the production of a stoichiometric syngas mixture for the ammonia synthesis.

In the first two cases the reactor is operated with pure oxygen (and steam). In the third case air or turbine off-gases are used. Figure 25 depicts three different types of autothermal reactor.

With the reactors shown in Figure 25 A and B no reaction occurs before the gas enters the catalyst bed. Reactor C features a burner, thus thermal oxidation takes place in the empty space above the catalyst bed. In all cases the highest temperatures occur at the top of the reactor because of the catalytic (A, B) or thermal oxidation (C) of hydrogen and carbon monoxide. The endothermic reforming of methane and other hydrocarbons according to the steam – methane equilibrium (Eq. 7 Table 14) is carried out in the lower part of the reactors. Nickel catalysts are used, often in the form of impregnated alumina lumps, which have a high resistance to fusion and thermal shock.

The waste-heat boiler is mounted immediately after the reactor, usually without a transfer line. Synthesis gas cools down rapidly in the boiler, thus avoiding recombination of carbon monoxide and hydrogen.

The direct application of the catalytic autothermal reactor without preceding decomposition of at least part of the hydrocarbons in a primary reformer has been studied in experimental plants [104]. Several layers of catalyst with increasing activities are used. Soot formation and high-peak temperatures are avoided by using a suitable catalyst at high space velocities, even though benzene feedstock, which is particularly liable to soot formation at a low S/C ratio is used. The experimental results are depicted in Figure 26. Because of the high reaction temperature the secondary reformers can stand a higher sulfur concentration in the feedstock. This fact has led to several tests with high-sulfur feedstock. However, commercial application has not yet been realized [76, 77].

4.1.4. Refinery Processes

In refineries some processes require hydrogen, while others are a potential source of hydrogen. With the increasing quality demands for refinery products and with the increasing use of bottom-of-the-barrel products, the transfer of hydrogen within the refinery is increasing. Hydrogen is produced by steam reforming of hydrocarbons and by recovery from hydrogen-rich gases and refinery offgases, formerly used as heating gases, (Chap. 5).

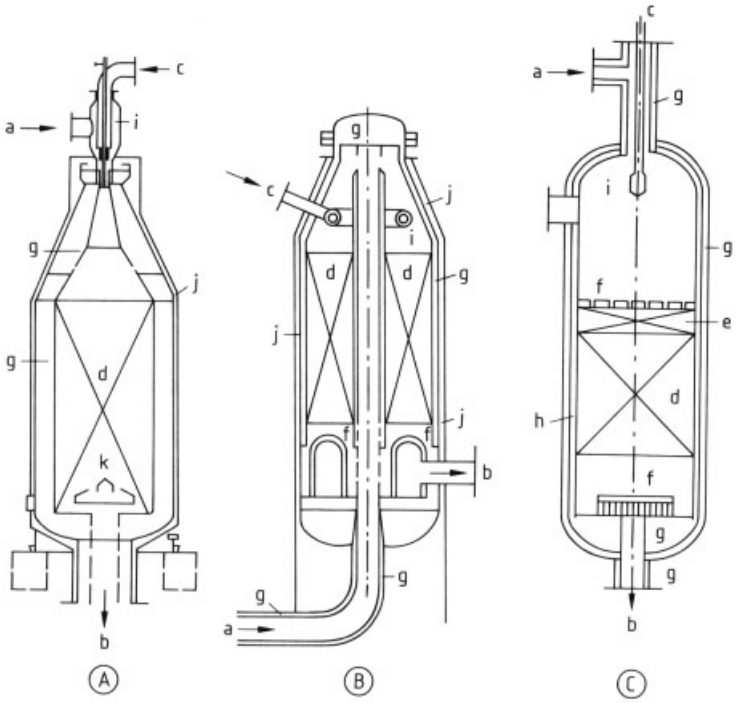

Figure 25. Designs of secondary (autothermal) reformers
A) Water-cooled jacket reactor with burner for methane-rich gases; B) Secondary reformer with toric oxygen or air supply device [90]; C) Secondary reformer with water-cooled tip without water jacket [103]
a) Raw gas inlet; b) Reformed gas outlet; c) Air, oxygen, and steam inlet; d) Catalyst; e) High-temperature catalyst; f) Inert material; g) Internal insulation; h) Multiple layers insulation; i) Burner; j) Water jacket

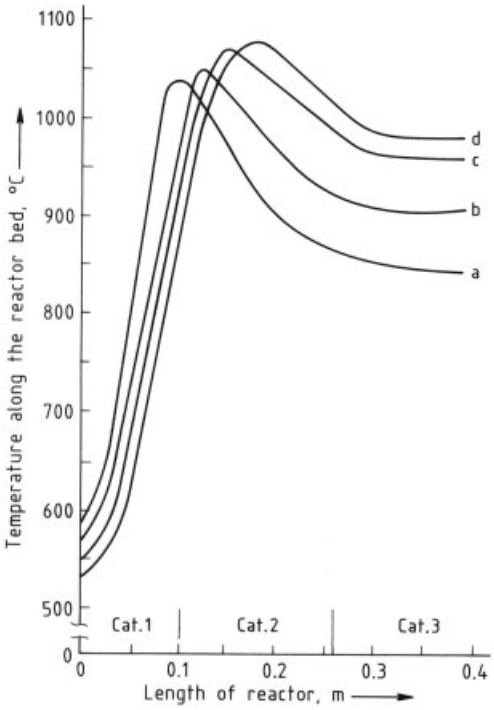

Production and recovery of hydrogen from the byproducts of the following types of refinery processes are possible:

cokers and visbreakers
(thermal cracking processes)
catalytic crackers
catalytic reformers

For a detailed description of the processes see → Oil Refining. Here only facts relating to the hydrogen production are discussed.

Figure 26. Autothermal reforming of benzene on Ni-catalysts of increasing activity [104]
Pressure 101.3 kPa; inlet temperature 565 °C; molar air/carbon ratio 1.8; molar steam/carbon ratio 0.6
a) Space velocity = 5512 m^3 (STP) h^{-1} m^{-3}, carbon formation; b) Space velocity = 11 023 m^3 (STP) h^{-1} m^{-3}, carbon formation; c) Space velocity = 16 535 m^3 (STP) h^{-1} m^{-3}, carbon formation; d) Space velocity = 22 047 m^3 (STP) h^{-1} m^{-3}, no carbon formation

Cokers and Visbreakers. In cokers and visbreakers heavy crude and residues are converted to petroleum coke, oil, light hydrocarbons (benzene, naphtha, LPG) and gas. Depending on the process, hydrogen is present in a wide range of concentrations. Since (like the coal coking process) petroleum coking processes need gas for heating purposes, adsorption processes (PSA) are best suited to recover the hydrogen because they feature a very clean hydrogen product and an off-gas suitable as fuel (see Section 4.1.1).

If more hydrogen is required in the refinery, it can be derived from the fuel gas and from the LPG fraction by steam reforming. In times of oil shortage processes have been suggested to convert the excess coke into synthesis gas and hydrogen by coke gasification [105, 106].

Catalytic Crackers. Catalytic cracking is the most important process step for the production of light products from gas oil and increasingly from vacuum gas oil and residues.

In catalytic cracking the molecular mass of the main fraction of the feed is lowered, while another part is converted to coke. The coke is deposited on the hot catalyst. The catalyst is regenerated in one or two stages by burning the coke off with air, which also provides the energy for the endothermic cracking process. The cracking processes occurring can be categorized as follows [107]:

paraffins and naphthenes are cracked to olefins and to alkanes with shorter chain length,
monoaromatic compounds are dealkylated without ring cleavage,
diaromatics and polyaromatics are dealkylated and converted to coke.

Hydrogen is *formed* only in the last type of reaction, whereas the first two reactions produce light hydrocarbons and therefore *need* a certain amount of hydrogen. Figure 27 shows for various feedstocks, that an increase in coke production goes hand in hand with an increase in hydrogen production. Thus, a catalytic cracker can be operated in such a manner that enough hydrogen for subsequent processes is formed.

Figure 28 shows how the hydrogen production from catalytic cracking can be linked to other hydrogen consuming processes. After desulfurization by absorption processes (see Section 5.4) the off gas is usually purified and fractionated in a cryogenic unit (see Section 5.1).

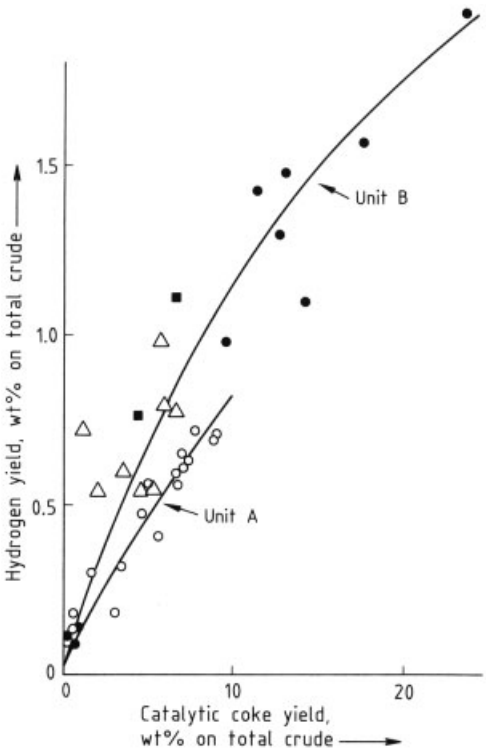

Figure 27. Hydrogen production vs. catalytic coke yield using amorphous catalyst for different feedstocks [108]; ○ West Texas Permian; △ Light Iranian; ■ Kuwait; ● Residuum

Catalytic Reformers. Naphtha fractions are reformed to improve the quality of gasoline. The most important reactions occurring during this process are the dehydrogenation of naphthenes to aromatics. For the dehydrogenation of cyclohexane, e.g., the hydrogen formation is as follows:

$$C_6H_{12} \rightarrow C_6H_6 + 3\,H_2 \quad \Delta H = +206.20\,\mathrm{kJ/mol}$$

This reaction is endothermic and is favored by low pressures. However, because hydrocracking occurs as a concurrent reaction the pressures are chosen between 1 and 3 MPa and the reaction temperature lies in the range of 300 – 450 °C. The reaction is performed on platinum catalysts, with other metals, e.g., rhenium, as promoters. The feedstock for the reforming process must be carefully purified from sulfur and nitrogen

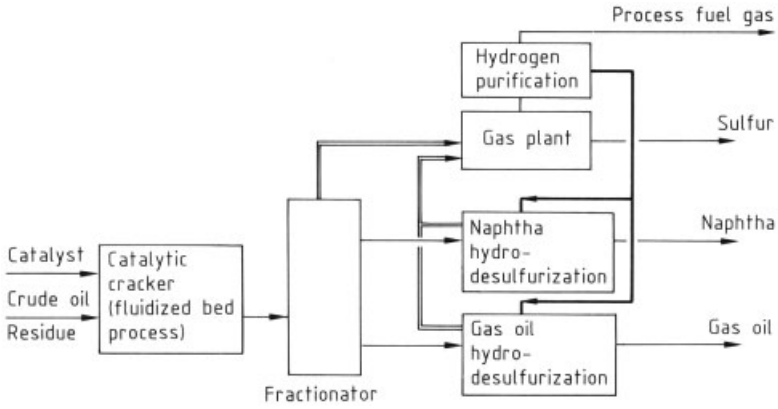

Figure 28. Hydrogen production by catalytic cracking with subsequent use in hydro-desulfurization processes ——H_2-rich gases; —— H_2 purified

compounds (both <1 ppm). This uses up a great deal of the hydrogen produced. Table 16 summarizes the results of some reforming processes. The aromatic content of the feedstock is substantially increased and the hydrogen set free raises the content in the off-gas to 85 %.

Table 16. Hydrogen as a byproduct of catalytic reforming processes. Range of production and composition of the H_2-rich gas fraction

	Range	
Feedstock: naphtha		
Boiling range, °C	80 – 200	
Paraffins, vol %	75 – 50 – (25)	
Naphthenes, vol %	30 – 50	
Aromatics, vol %	5 – 20 – (40)	
Liquid products		
Octane number	(95) – 100 – 105	
Reformate, wt %	75 – 88	
Paraffins, vol %	30 – 20	
Naphthenes, vol %	0.5 – 2.5	
Aromatics, vol %	65 – 85	
Hydrocarbons C_2– C_4, wt %	10 – 15	
Hydrogen, wt %	2 – 3	
Composition of H_2-rich gas		typical
H_2,vol %	75 – 85	82
CH_4, vol %	5 – 9	7
C_2, vol %	4 – 7	5
C_3, vol %	2.5 – 5.5	4
C_4, vol %	0.5 – 2.5	2

4.1.5. Petrochemical Processes

Steam Cracking for Olefin Production. During the production of ethylene (→ Ethylene) and propene (→ Propene) large amounts of hydrogen are formed as byproduct. The composition of some crude gases from steam cracking of ethane, naphtha and hydrogenated vacuum gas oil is given in Table 17.

Table 17. Hydrogen as a byproduct in the production of ethylene in modern short residence time cracking furnaces. Cracking conditions standardized to an ethylene yield of 32 %

Raw gas	Ethane	Naphtha	Gas oil
After cracker and dryer			
H_2, mol %	33	16	10
CH_4, mol %	5	32	30
C_2H_4, mol %	32	32	32
C_2H_6, mol %	28	5	6
C_3H_6, mol %	1	11	16
C_3H_8, mol %		1	1
Other: C_{4+}, CO, H_2S, mol %	1	3	5
H_2-fraction of demethanizer			
H_2, mol %		80 – 95	
CO, mol %		1 – 0.5	
CH_4, mol %		19 – 4.5	
C_2, mol %		0.1	

Since propane, propene, ethane, and ethylene are fractionated at low temperature, hydrogen is usually separated from methane by condensation of the latter (see Section 5.1). The hydrogen recovered has a purity of 90 – 96 %.

Acetylene Production. Hydrogen is also produced as byproduct in the production of acetylene by thermal cracking (→ Acetylene, → Acetylene, Chap. 4.3.2). Because of the extreme cracking conditions the hydrogen content in the crack gas is particularly high. The production of 120 000 t/a acetylene and 50 000 t/a ethylene using the Hüls electric arc process yields 360×10^6 m^3 (STP)/a hydrogen as byproduct. In

Table 18 the crude gases of several processes are compared. The acetylenes are recovered from the raw gas by absorption. Pure hydrogen is recovered from the remaining gas by cryogenic processes, sometimes in combination with adsorption processes.

In a further development of the electric arc process for the production of hydrogen, reduction gas, acetylene and ethylene, a plasma process has been suggested. A great number of feedstocks can be used ranging from natural gas to coal [109, 110]. The hydrocarbons are not cracked directly in the arc but a hydrogen plasma is used as energy carrier. In this way the acetylene yield can be increased while the hydrogen yield (and the amount of carbon deposits) decrease.

4.2. Electrolysis

Electrolysis has been used for approximately 100 years for hydrogen production. The first large installation was by Norsk Hydro in 1927 in Norway. Further plants were erected by Cominco in Trail, British Columbia, Canada in 1940 and, from 1945 onwards, some other plants with capacities up to 33 000 m^3 (STP)/h of hydrogen. As explained in Section 4.6, the erection of large electrolysis plants depends on the availability of cheap electricity from hydropower stations. Plants for smaller amounts of hydrogen (50 – 500 m^3 (STP)/h) are often used by the industry because they are simple to operate. Moderate power costs are an additional incentive. A total of ca. 5 % of the world hydrogen production is by means of electrolysis.

4.2.1. Principles

For general principles see → Electrochemistry.

If a potential is applied to the electrodes of an electrolysis cell filled with a suitable electrolyte, the following reaction occurs at the electrodes:

1) Cathode

$$2\,H_2O\,(l) + 2\,e^- \rightarrow H_2\,(g) + 2\,OH^-\,(aq) \qquad (26)$$

2) Anode

$$2\,OH^-\,(aq) \rightarrow 1/2\,O_2\,(g) + H_2O\,(l) + 2\,e^- \qquad (27)$$

3) Cell Reaction

$$H_2O\,(l) \rightarrow H_2\,(g) + 1/2\,O_2\,(g) \qquad (28)$$

where l is liquid, g is gaseous, and aq is dissolved in water.

Pure water is not suitable as an electrolyte because of its very low conductivity. Therefore, aqueous solutions of potassium or sodium hydroxide, sodium chloride, hydrochloric acid, etc. are used. Depending on the electrolyte and the material of the electrodes the reaction at the anode may lead to other products, in particular to sodium hydroxide and chlorine (see Section 4.2.4).

The change in enthalpy for the electrochemical decomposition of water is

$$\Delta H = \Delta G + T\,\Delta S = -nFE + nFT \cdot \left(\frac{\partial E}{\partial T}\right)_p \qquad (1)$$

where H is the enthalpy, G is Gibbs free energy, S entropy, T temperature, n number of electrons transferred per formula conversion, F the Faraday constant, and E the electrochemical potential.

The thermodynamic standard data at p = 101.3 kPa and T = 298.15 K are:

Reaction enthalpy $= \Delta H^0_{298\,K} = 286\,kJ/mol$

Reaction entropy $= \Delta S^0_{298\,K}$
$= 163\,J mol^{-1}\,K^{-1}$

Gibbs free energy of reaction $= \Delta G^0_{298\,K}$
$= 237\,kJ/mol$

The value of the Faraday constant is

$$F = 96495\,As/mol$$

Using these data the required electrical energy becomes:

$$W = \Delta G = F \times n \times E_{rev} \qquad (2)$$

where E_{rev} is the ideal (reversible) decomposition potential. Under standard conditions it amounts to:

$$E_{rev} = \frac{\Delta G}{n \cdot F} = 1.228\,V \qquad (3)$$

Because of irreversible processes on the electrodes and because of the resistance of the electrolyte the actual decomposition potential is always higher than the ideal value.

According to Equation (29) the free energy, ΔG, is smaller than the reaction enthalpy, ΔH,

by the amount $T\Delta S$. In the ideal case operation of the cell requires an amount of electrical energy, $W = \Delta G$, and the addition of heat, $Q = T\Delta S$.

If both amounts of energy are to be supplied in the electrical form, the potential under standard conditions is increased by the thermal potential ΔE_Q.

$$\Delta E_{\mathrm{Q}} = \frac{T\,\Delta S}{n \cdot F} = 0.252\,\mathrm{V} \tag{4}$$

Thus, the theoretical minimum decomposition potential at standard conditions is:

$$E_{\mathrm{th}} = 1.480\,\mathrm{V}$$

Figure 29 shows the temperature dependence of the energy or the decomposition potential, respectively at a constant pressure of 100 kPa. An increase in temperature lowers the reversible decomposition potential, while at the same time the thermal fraction of the total energy required increases. This means, that at higher temperatures heat energy instead of electrical energy can be partially used. Technical aspects of this behavior in regions above the boiling point of water (373 K) will also be considered in more detail in Section 4.2.3.

The decomposition potential also depends on pressure. From the pressure dependence of the free energy

$$\left(\frac{\partial \Delta G}{\partial p}\right)_T = \Delta \mathrm{v}$$

the following expression can be derived for the pressure dependence of the decomposition potential of an ideal gas, i.e., neglecting the activity coefficients:

$$\Delta E_p = \Delta E^0 + \frac{RT}{2F} \ln \left\{ \frac{p_{(\mathrm{H_2})}}{p^0} \cdot \left[\frac{p_{(\mathrm{O_2})}}{p^0} \right]^{1/2} \right\}$$

For water at 298 K, taking the activity coefficients into account this equation becomes

$$\Delta E_p = \Delta E_{(p=p^0)} + 0.0189 \ln \frac{p}{p^0}$$

so that, on increasing the pressure from 100 to 1000 kPa, an increase of 0.0435 (= 0.0189 · ln 10) V would be expected. However, the fact that the gas produced at the electrodes has a smaller effective volume leads to a reduced overpotential at the electrodes, so that for electrolysis under increased pressure no increase in the total potential is in fact found.

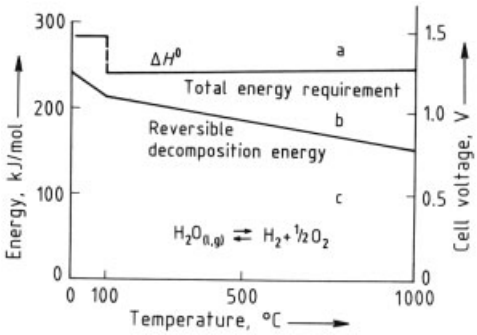

Figure 29. Temperature dependence of hydrogen formation by electrolysis at 101.3 kPa. The energy scale (kJ/mol) shows the standard free energy ΔG^0 and the enthalpy ΔH^0 of water cleavage. The voltage scale (V) allows determination of the corresponding theoretical cell voltage
a) Formation with H_2 heat output; b) H_2 formation with heat input necessary; c) No H_2 formation by electrolysis possible

The potential actually required is the sum of the following contributions:

$$U = E_1 + E_2 + E_3 + E_4$$

where U is the cell voltage (V), E_1 the theoretical cell voltage (E_{rev}) (V), E_2, E_3 the anodic and cathodic overvoltage (V) at the phase boundary electrolyte-electrode, and E_4 is the voltage drop (V), due to electrical resistance of the electrolyte system.

The overvoltages E_2 and E_3 can be influenced by suitable choice of the electrode materials and their surface conditions. The voltage drop in the electrolyte, E_4, depends (1) on the conductivity of the electrolyte, (2) on the permeability of cell diaphragms, (3) on the distance of the electrodes from one another, and (4) on the current density. Figure 30 shows the influence of the current density on the cell voltage during water electrolysis using potassium hydroxide electrolyte.

The efficiency of the electrolysis is related to the minimum voltage according to Equation (29):

$$\eta = \frac{E + \frac{T\,\Delta S}{n\,F}}{U}$$

Under standard conditions:

$$\eta = \frac{1.48}{U}\,\frac{\mathrm{V}}{\mathrm{V}}$$

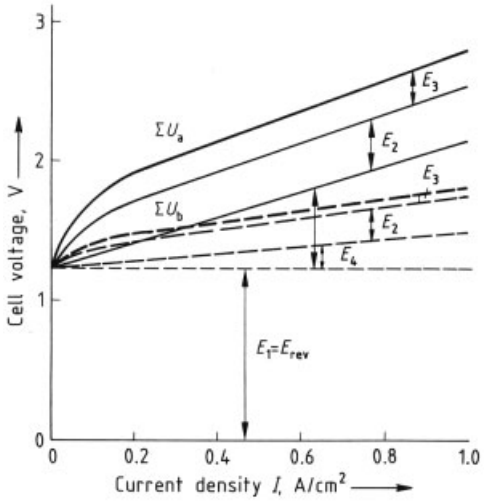

Figure 30. Relationships between current density and cell voltage for alkaline water electrolysis
—— conventional electrolysis, 30 wt % KOH, 90 °C; – – – prognosis for advanced conventional electrolysis according to [111, 112]
E_1 theoretical reversible cell voltage; E_2 anodic overvoltage, difficult to minimize; E_3 cathodic overvoltage, can be reduced by suitable catalysts; E_4 resistance of the electrolysis system, can be reduced by the use of thin-walled diaphragms and zero-gap constructions

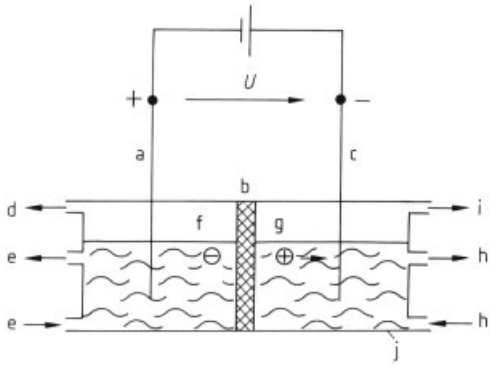

Figure 31. Schematic of a water electrolysis cell
a) Anode; b) Diaphragm; c) Cathode; d) Oxygen outlet; e) Anodic electrolyte cycle; f) Anion; g) Cation; h) Cathodic electrolyte cycle; i) Hydrogen outlet; j) Cell wall

Principle Construction of a Water-Electrolysis Cell. Figure 31 shows the principal construction of a cell. Anode and cathode regions are separated by a diaphragm which allows the current to flow, but is otherwise gas-tight. The cell is filled with electrolyte. Oxygen is formed during the electrolysis at the anode, hydrogen at the cathode. Depending on the arrangement of the electrodes and the diaphragm, the cells may be designated as unipolar or bipolar cells (see Fig. 32).

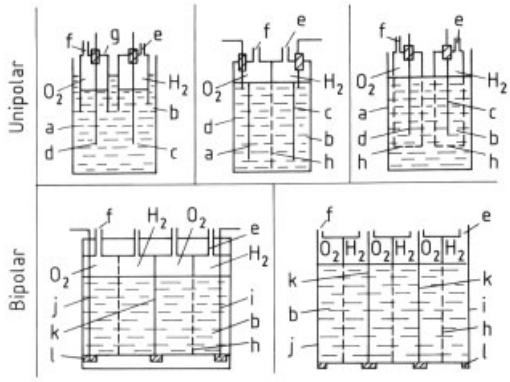

Figure 32. Different modes of water electrolysis cell according to [117]
a) Cell walls; b) Electrolyte; c) Cathode; d) Anode; e) Hydrogen outlet; f) Oxygen outlet; g) Gas collector; h) Diaphragm; i) Outer cathode; j) Outer anode; k) Bipolar electrode; l) Insulation

The *unipolar cells* are further differentiated in bell-type (without diaphragms), the usual diaphragm cells, and a bell-diaphragm type. A characteristic of the unipolar cell is that cathode and anode each have their own separate cell region.

Bipolar cells are characterized by the fact that the metallic separator between two cells connected in series serves as cathode in one of the cells and as anode in the next cell. The arrangement of the bipolar electrodes is similar to the construction of a filter press, so that they are often named accordingly.

Electrolyte. To minimize the resistance losses of the electrolytes usually 25 – 36 wt % potassium hydroxide solution is used. Other electrolytes are aqueous sodium hydroxide or, for the chlor-alkali electrolysis, solutions of hydrochloric acid, sodium chloride, etc. Electrolytes which are immobilized in polymers can also be used.

Since the conductivity of conventional electrolytes increases with temperature, electrolysis units usually operate at 70 – 90 °C, just below the boiling point of the aqueous solution. The

conductivity of sodium hydroxide and potassium hydroxide as a function of temperature and electrolyte concentration is shown in Figure 33.

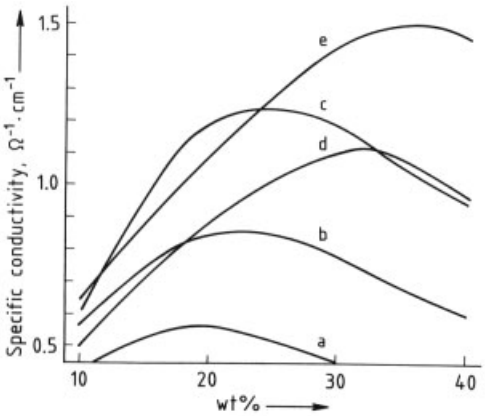

Figure 33. Conductivity of electrolytes used in conventional water electrolysis
a) NaOH, 40 °C; b) NaOH, 60 °C; c) NaOH, 80 °C; d) KOH, 60 °C; e) KOH, 80 °C

Materials. Electrochemical processes place particularly high requirements on corrosion protection. The conventional water electrolysis with potassium hydroxide as electrolyte can be carried out using carbon steel as a material of construction. Areas particularly subject to attack are coated with plastics or ceramics or are nickel-plated.

The cathode is usually made of steel. To reduce the hydrogen overvoltage E_3 the surface texture may be activated and coated with various catalysts. The anode and the electrodes of bipolar cells are usually made of nickel or nickel-coated steel. Next to platinum, which cannot be used for economic reasons, this material has the lowest overvoltage.

The diaphragm in the classical electrolysis units was initially made of asbestos. The asbestos mats, which separate the electrodes from one another, were reinforced with nickel nets. Because of the health hazards involved in the use of asbestos, substitute materials are being looked for. Ceramics and hydrophiliated polymers may be the solution to this problem.

4.2.2. Conventional Water Electrolysis

A conventional electrolysis system uses an alkali solution, usually potassium hydroxide, as electrolyte. The electrodes are in unipolar or bipolar arrangements. Hydrogen production takes place either at ambient or at increased pressure (Commercial plants up to 3 MPa).

Normal-Pressure Electrolysis Units. The advantages of a process at almost ambient pressure are:

1) Low mechanical strains on piping fittings, seals, and instruments,
2) Simple operation, because feed water is not required under pressure, quick start-up, simple maintenance,
3) Safer operation because of avoidance of high-pressure hydrogen, small pressure differences between the evolved gases, and simple blanketing of the electrolysis units and the piping network with nitrogen under low pressure

Unipolar Stuart cells are offered by a single producer (Electrolyser Inc., Toronto). The particular advantage of this type of cell is its robust nature. Since the cells are arranged in parallel they can be easily maintained or renewed, if necessary, without interruption of the process.

All other producers use *bipolar cells* which are mounted in series (filter press). This allows the use of higher voltages (up to 600 V) per unit. A schematic of bipolar electrolysis is shown in Figure 34. Pre-electrodes, which are placed close to the diaphragm to give the smallest possible resistance between the electrodes, can be clearly seen. The electrodes themselves are perforated or made from nets, so that the gas bubbles evolve behind the electrodes and do not increase the resistance between the electrodes.

The operating conditions for electrolysis units of various producers are given in Table 19 (see also → Electrochemistry). Typical operating conditions are electrolyte temperatures of 70 – 90 °C, a cell voltage of 1.85 – 2.05 V and a current density of 2 – 3 kA/m^2. The specific power consumption is between 4 and 5 kWh/m^3 (STP).

Table 18. Hydrogen as a byproduct in acetylene production (raw gas after quench and condensation, dry basis)

	BASF Process based on			Hüls Plasma arc process[b]
	Methane [a]	LPG	Naphtha	Methane-rich gas
Gas composition				
H_2, vol %	56.5	46.4	42.7	57.6
C_2H_2, vol %	7.5	8.2	8.8	15.5
CH_4, vol %	5.2	5.0	4.9	13.8
Other hydrocarbons, vol %	0.8	1.0	1.2	2.5
CO, vol %	25.8	35.0	37.9	0.6
CO_2, O_2 inerts, vol %	4.2	4.4	4.5	10.0

[a] 1460 m^3 (STP) H_2 per tonne of feed.
[b] 3300 m^3 (STP) H_2 per ton of C_2H_2, 1830 m^3 (STP) H_2 per tonne of feed

Table 19. Producer of medium and large sized commercial electrolysis units in alphabetical order. Information from producers and Achema publications in 1988

Producer, country	Type of electrolysis	Electrolyte conc., wt %	Pressure, MPa Temperature, °C	Current density, A/m^2 Cell Voltage, V Power consumption, kWh/m^3 (STP) H_2	Commercial status 1988 size of basic units, m^3 (STP) H_2/h [a]
BBC AG	bipolar	KOH	ambient	2000	5 – 300; 4×300
Switzerland	filterpress	25	80	2.05/4.9	
Davy-Bamag.	bipolar	KOH	ambient		3 – 330
Fed. Rep. of Germany	filterpress			4.2 – 4.5	
Electrolyser	unipolar	KOH	ambient	1340	0.5 – 100
Canada	tank	28	70	1.8/4.3 – 5.0 [c]	
				2500	larger plants
				1.9/4.4	
Krebs-Kosmo	bipolar	KOH	ambient	1000 – 9000	20 – 200
Fed. Rep. of Germany	filterpress	28	75	1.6 – 2/3.9 – 4.8	
Lurgi (Zdanski-Lonza)	bipolar	KOH	30	2000	110 – 750
Fed. Rep. of Germany	filterpress	25	90	1.86/4.3 – 4.6	
Norsk Hydro [b]	bipolar	KOH	ambient	1750	
Norway	filterpress	25	80	1.75/4.1	
Oronzio de Nora	bipolar	KOH	ambient	1500	5 – 1000
Italy	filterpress		80	1.85 – 1.95/4.6	
Teledyne	bipolar	KOH	0.7	3000	1 – 42
United States	filterpress	25	80	2.1 – 2.2/5.5 – 6.1	

[a] Much larger plants have been built by combining the appropriate number of units.
[b] No up-to-date information available.
[c] Higher value: standard electrode; lower value: activated.

Table 20. Examples for small electrolysis units, projects, novelties, small series and advanced technologies

Producer, country	Type of electroysis	Electrolyte (membrane)	Pressure, MPa Temperature, °C	Current density, A/m^2 Cell Voltage, V Power consumption, kWh/m^3 (STP) H_2	Development status
Advanced Electrolysis [113],	bipolar	KOH,	0.6	10 000	project
Federal Republic of Germany	filterpress	conventional	140	1.8/4.3	
Asea Brown Boveri,	bipolar	water	2.0	10 000	small plants
Switzerland		(polysulfone)	80	1.74/4.2	1 – 20 m^3 (STP)/h
High Temp. Electrolysis [127],	bipolar	water	0.3	6000	1 ^{3} (STP)/h
Federal Republic of Germany		Y_2O_3+ ZrO_2	1000	1.32/3.2	pilot plant projected
Hydrogen Appliances,	bipolar	water	2.5	4.2 – 5	small plants
Belgium		(polysulfone)	50		0.04 – 1 m^3 (STP)/h
					0.1 – 5 m^3 (STP)/h
Sema Metra Conseil, France	with additional compressing fluid	conventional	20.0	5.5 – 6	20 – 100 m^3 (STP)/h
Sunshine-Project,	bipolar	KOH (30 wt %)	2.0	4000	20 m^3 (STP)/h
Japan [120, 126]	filterpress	conventional	120	1.65/4.0	pilot plant projected
Vandenborre,	bipolar	KOH (30 wt %)	1.0		small plants
Belgium			100	/3.9	

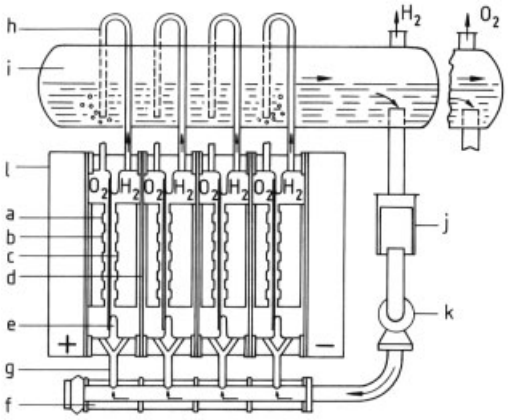

Figure 34. Cross section of a bipolar, atmospheric pressure electrolysis unit with alkaline electrolyte (Brown Boveri) a) First anode with pre-electrode; b) Diaphragm; c) Pre-electrode of the cathode; d) Cathode for the first cell compartment and anode for the second cell compartment-bipolar middle electrode; e) Cell frame with insulation for the middle electrode; f) Distribution pipe for electrolyte; g) Inlet pipe for electrolyte; h) Take-off system for electrolyte and dissolved gases; i) Overflow pipe and collecting vessel for electrolyte and H_2 (an analogous system is used for O_2); j) Electrolyte filter; k) Circulation pump; l) End plate

It must be taken into account whether the energy consumption is only for the electrolysis itself, or whether further installed units, such as electrolyte pumps, water treatment plant, gas purification, are included.

The gas purity after compression and water removal is in general $> 99.8\,\%$ for hydrogen and $> 99.6\,\%$ for oxygen. Higher purities are possible by means of catalytic conversion and/or adsorptive drying units.

Pressure Electrolysis. Pressure electrolysis units in the range of 0.6 – 20 MPa are available. Since hydrogen is usually required at high pressure, and because the power consumption for the pressure electrolysis does not increase significantly, these units save both equipment and energy for hydrogen compression. The construction and the sealing of the electrolysis cells, however, is complicated (see Fig. 35). The operating data reported by producers of pressure electrolysis are given in Tables 19 and 20. To compare the data with those of low pressure electrolysis the energy consumption for hydrogen compression to the end pressure has to be considered.

Advanced Conventional Electrolysis. The conventional potassium hydroxide electrolysis according to [113, 114], can be improved considerably. Some of the suggestions made have been incorporated in single commercial electrolysis units. Other components necessary are still in the development stage. Areas of development are:

Zero-Gap Cell Geometry. By placing the electrodes directly on the surface of the diaphragm the space between the electrodes can be reduced and the voltage drop in the electrolyte, and thus the heat loss caused by the current, can be minimized. Figure 36 shows perforated foil electrodes in a zero-gap construction.

In particular the construction with pre-electrodes has already been used in commercial plants. The disadvantage of this type is that in these electrolysis units, with high current density and high operating temperatures, the corrosion tendency is greatly increased. Products of corrosion, which may be formed at the anode, can grow through the diaphragm and lead to dangerous short-circuits.

New Materials for Diaphragms. A replacement for asbestos diaphragms are polysulfones, with hydrophobic character decreased by means of additives (e.g., polyantimonic acid) [115].

Another line of development is the use of oxide-ceramic diaphragms based on barium or calcium titanate or nickel oxide [116]. On a metallic net a hydrophilic gas-tight oxide layer is deposited. The thickness of the layer is <500 µm, which leads to a low resistance of ca. $2\times10^{-5}\ \Omega/m^2$. The stability against electrolytes at high temperatures is also favorable.

Electro-Catalysts. The kinetic inhibition of the electrode processes can be reduced by use of catalysts. This is already partly done in conventional plants. To assist the oxygen formation at the anode, lanthanum-containing perowskites, nickel-cobalt oxides and Raney nickel has been suggested.

The overvoltage at the cathode during the evolution of hydrogen can be reduced by the use of noble metals (platinum black). Commercial catalysts are, however, free of noble metals. Sintered, foamed, and alkali-leached nickel compounds, which are stabilized by the addition of TiO_2, ZrO_2 and MoO_3, are used. The long-term stability and the corrosion resistance against hot alkali solutions expecially in the de-

polarized state are the main problems encountered in the use of electro catalysts.

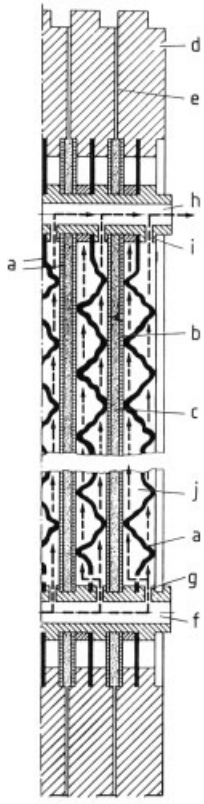

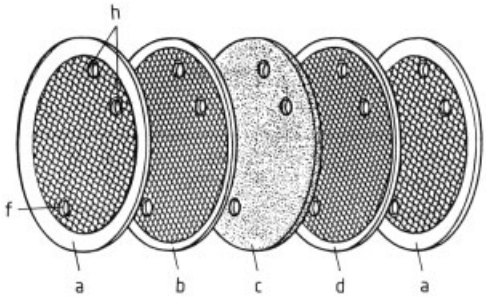

Figure 35. Cross section and exploded view of cells of a pressure electrolysis unit (Lurgi, Zdansky-Lonza pressure electrolysis)
a) Bipolar electrodes, dimple plate cell partititon; b) Pre-electrodes in the form of nets on both sides of the asbestos diaphragm (c); d) Cell frame; e) Sealing ring, sealing the electrolyte against the surroundings and insulating the bipolar sections against each other; f) Electrolyte duct; g) Bore in the electrolyte duct for supplying the electrolyte solution to both sides of the electrolyte; h) Parallel H_2 and O_2 ducts; i) Bore in the gas duct; j) Electrolyte compartment

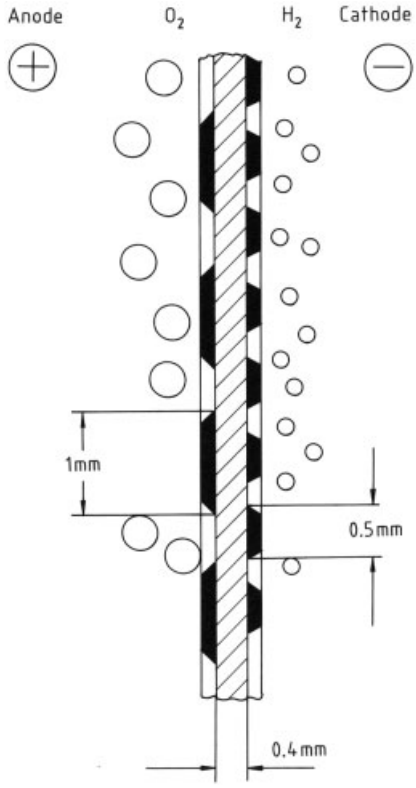

Figure 36. Zero gap cell geometry. Perforated cathodes and anodes, similar to the nets in Figure 35, in direct contact with the diaphragm and the membrane, respectively. The conical apertures with different diameters for O_2 and H_2, respectively, facilitate the detatchment of the developing gas bubbles [113]

The increase in capacity of the new types of electrolysis cells makes further improvements necessary. The increased corrosion caused by the higher operating temperatures and greater current densities requires special materials of construction. In large-capacity plants nickel-plated steel, in low-capacity plants ($\leq 20\ m^3$ [STP]) polysulfone, is employed. In particular, the gas collection system for the fine hydrogen bubbles necessitates additional equipment.

If all the theoretical possibilities to improve the electrolysis were employed, the water electrolysis could be greatly improved. Region b in Figure 37 shows the boundaries of the improvement possible in alkaline water electrolysis [113, 114].

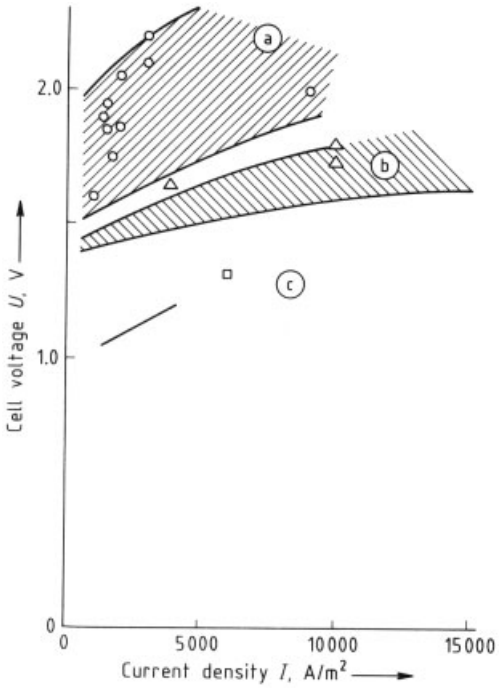

Figure 37. Illustration of the cell voltage and current density of commercially available or projected electrolysis units
The cell voltage U (V) can be converted by the equation $E = 2.392 \cdot U$ to the specific energy in kWh/m^3 (STP) H_2.
a) Range of commercially available electrolysis units [113, 116]; b) Range of advanced and membrane electrolysis [111, 114]; c) Steam electrolysis
○ suppliers data (see Table 19); △ present results; □ pilot plant project

Electrolysis Plants (see Fig. 38). Apart from the electrolysis unit an electrolysis plant consists of a number of different installations, such as electricity supply, water treatment, electrolyte circulation, the knock-out system (phase separator) to separate electrolyte from the product gases, gas purification, and the instrument and control system.

The water consumed during electrolysis has to be continuously replaced; the consumption is 0.805 L per cubic meter of hydrogen plus evaporation losses. The water make-up must meet stringent purity requirements to avoid a build-up of substances in the electrolyte solution which poison the electrodes or promote corrosion. The required water purity (conductivity 1 μS/cm) is obtained with the aid of ion exchangers.

The power, which in large plants is supplied in the form of three-phase current at a high voltage, must be transformed and rectified down to the necessary d.c. voltage. In addition, power for the various auxiliary equipment, such as the electrolyte circulation pump and the instrument and control system is necessary. Considerable amounts of potassium hydroxide are only necessary for the first filling. Since the energy losses in the electrolyte are converted to heat, a large amount of cooling water is necessary to operate the plant. This is also true for the gas purification unit.

The *gas purification* depends on the purity requirements placed on the gas and may be a simple condensation to remove moisture present. For higher purity requirements the catalytic conversion of the oxygen present in the hydrogen (see Section 5.3.5) and, after that, an adsorptive drying stage (Section 5.2.2) is used.

4.2.3. New Developments in Electrolytic Processes [117, 118]

Electrolysis with Proton-Conducting Ion-Exchange Membranes. In this type of electrolysis, better known as solid polymer electrolysis (SPE, General Electric), the diaphragm is replaced by a proton-conducting ion-exchange membrane (→ Electrochemistry, → Fuel Cells, Chap. 3.1.2). The water to be electrolyzed is introduced only to the anode side, and no additives to alter the conductivity are necessary.

The solid electrolyte consists of a Nafion membrane with the approximate structure:

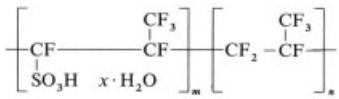

A cell consists of a ca. 0.25 mm thick film of this polymer. The following substances have been reported as electrode and catalyst material: platinum metal (cathode), and ruthenium oxide hydrate (anode).

The electrode layers have a high specific surface. The membrane becomes saturated with the water added at the anode side, which is electrolyzed and serves as a cooling medium at the same time. The electrical charge is transported by means of the hydrated H^+ ions of the sulfonic acid groups. Current densities of up to 20 000 A/m^2 can be reached. The principal construc-

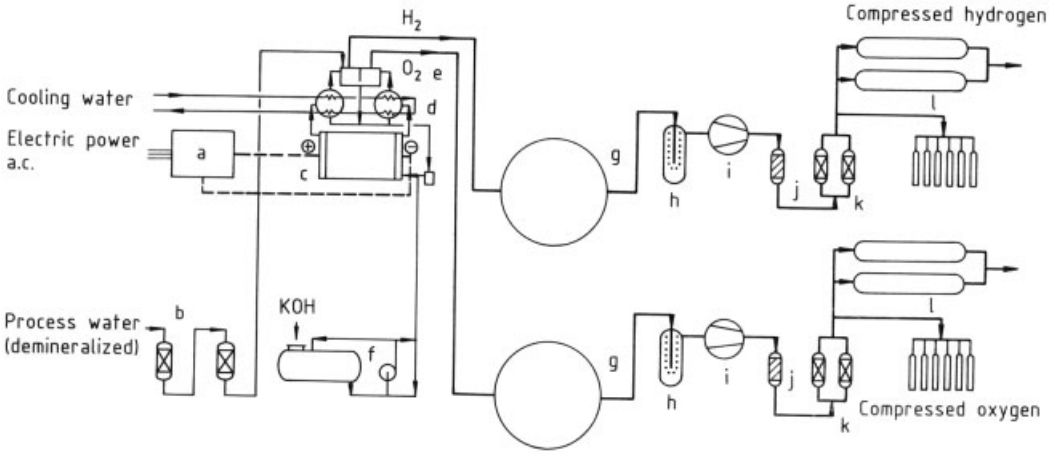

Figure 38. Process diagram of an electrolysis unit with the most important components
a) Rectifier unit; b) Process water demineralizer ion exchange unit; c) Electrolytic cell's water electrolyzer; d) Gas separator and cooler; e) Gas scrubber; f) Electrolyte tank and transfer pump; g) Gas holder; h) Filter; i) Compressor; j) Gas purifier; k) Drying; l) High-pressure storage tank and cylinder filling station

tion of the electrolysis cell is shown in Figure 39 using the Membrel electrolysis (Asea Brown Boveri) as an example [119].

The electrodes are in contact over the whole surface with a porous conductor; this is graphite on the cathode side and sintered nickel or titanium on the anodic side. The electrodes are in a bipolar arrangement.

Electrolysis units with proton-conducting membranes are offered in a capacity up to about 5 m^3/h of hydrogen from various producers. The characteristic operating data of such a module and of a conventional electrolysis unit are compared in Table 21. The advantages of these SPE units are not so much in the savings in power, but especially in the reduced volume of the unit, due to the much higher current density and the size reduction attainable because of the absence of the potassium hydroxide electrolyte system.

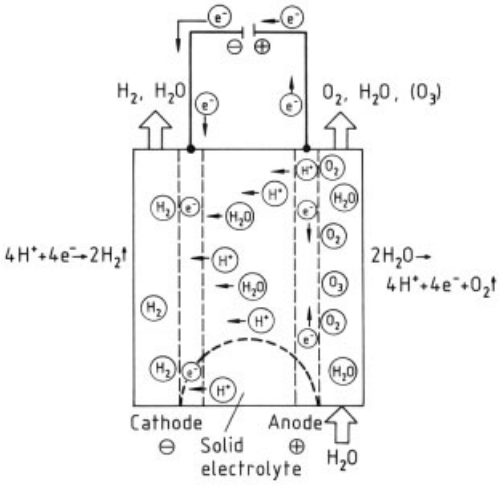

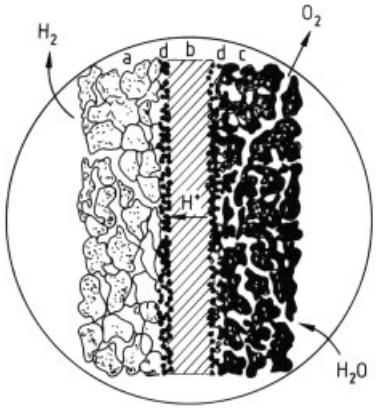

Figure 39. Principles and construction of an SPE electrolysis unit, Type: Membrel, Asea Brown Boveri [119].
At too high voltages ozone is produced at the anode
a) Porous cathodic current collector; b) Membrane, solid state electrolyte; c) Porous anodic current collector; d) Catalyst

Table 21. Comparison of conventional potassium hydroxide electrolysis with electrolysis using polysulphone electrolyte and membranes

	BBC KOH electrolysis	ABB Membrel electrolysis	Hydrogen appliances SPE electrolysis
Electrolyte	25 wt % KOH	polysulfone Nafion	polysulfone Nafion
Temperature, °C	80	80	50
System pressure, MPa	0.1	$\leq$2.0	2.5
Current density, A/m^2	2000	10 000	
Cell voltage, V	2.05	1.74	
Efficiency (η = 1.48/U), %	72	85	
Energy consumption (3.54/η), kWh/m^3 (STP)	4.9	4.2	4.2 (at 20 % efficiency) 5 kWh/m^3 (STP) (at 100 % efficiency)
Block volume	30		

Further developments are proceeding in this direction. For example, in test plant modules used in the Japanese Sunshine Project [120], membranes and catalysts have been operated at current densities up to 20 000 A/m^2 and temperatures up to 150 °C.

Solid polymer electrolytic cells can also be used advantageously, for the coproduction of ozone (O_3) if the appropriate overvoltage is applied (see also Fig. 39).

Water Vapor Electrolysis. According to Equation (29) the total energy requirement for electrolysis is only slightly temperature-dependent. However, the reversible part of the energy i.e., ΔG, which must be supplied in the form of electrical energy, decreases with increasing temperature (see. Eq. 31 a and Fig. 29). This means that an increasing amount of the total energy can be supplied by thermal energy. Overvoltages, which result from kinetic inhibition, also decrease with increasing temperature.

In the conventional alkali electrolysis the reaction temperature is limited because of the vapor pressure of the electrolyte and corrosion problems. Thus, for the asbestos-diaphragm cell the upper temperature limit of operation is 120 °C. For the polysulfone membrane the upper temperature limit is ca. 150 °C.

In high-temperature electrolysis doped zirconium dioxide and some other rare earth oxides are used as electrolyte. At temperatures >800 °C ZrO_2 and some other rare earth oxides are oxygen ion conductors (lattice defect conductors). In Figure 40 the specific resistance of some mixed oxides is given. These mixed oxides are sintered into ring-shaped membranes, which are kept as thin as possible (0.5 mm, goal is 20 – 30 µm [121]) to reduce the electrical resistance of the cell. The rings are built up into tubes and the tubes to bundles of cells (Fig. 41).

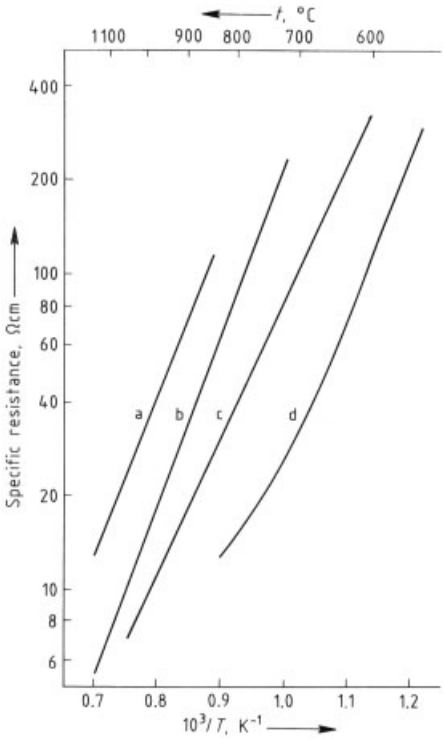

Figure 40. Specific resistance r (Ω cm) of various solid state electrolytes with oxygen-ion conductivity as a function of temperature [122]
a) $(ThO_2)_{0.93}$ $(Y_2O_3)_{0.07}$; b) $(ZrO_2)_{0.88}$ $(CaO)_{0.12}$; c) $(ZrO_2)_{0.90}$ $(Y_2O_3)_{0.10}$; d) $(ZrO_2)_{0.92}$ $(Yb_2O_3)_{0.08}$

Porous electrodes are positioned on the surface of the solid electrolyte. Mixed oxides with perovskite structure are used ($LaNiO_3$, $LaMnO_3$) for the anode. The cathode is a ZrO_2/Ni cermet, which prevents the active nickel metal of the cathode from agglomerating [123]. Water vapor is led to the *cathode*, whereby the cathode reaction for hydrogen formation takes place:

$H_2O + 2\,e^- \rightarrow O^{2-} + H_2$

The oxygen ion is oxidized at the anode:

$O^{2-} \rightarrow 2\,e^- + 1/2\,O_2$

Typical operating conditions are:

Potential	1.3 V
Current density	0.4 A/cm^2
Operating temperature	900 °C
Electrical energy consumption	ca. 3 kWh per cubic meter (STP) H_2

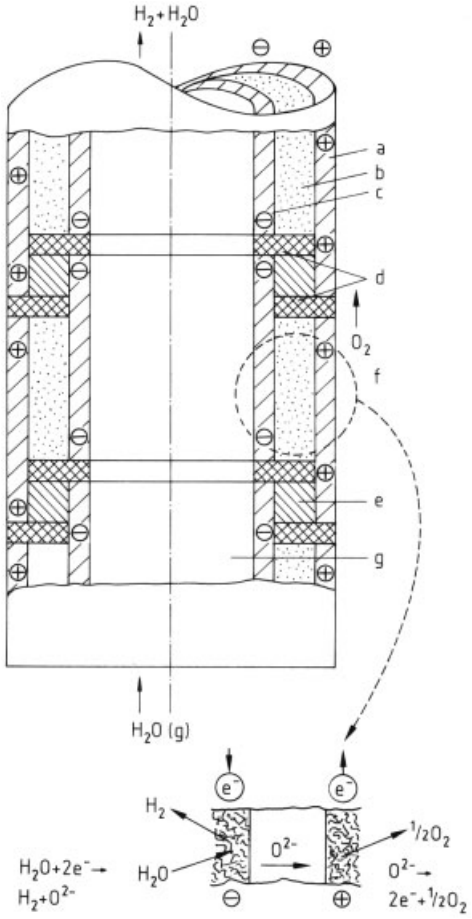

Figure 41. Principles and construction of a bipolar high-temperature electrolysis cell with an oxygen-ion conductive ZrO_2 electrolyte
a) Anode; b) Electrolyte (ZrO_2); c) Cathode; d) Insulation; e) Conductive cell sections; f) O_2 space; g) H_2, H_2O duct

The performance characteristics of the high-temperature electrolysis is also given in Figure 37.

The process has been tested on a laboratory scale [124 – 126]. A pilot plant for the production of 1 m^3 (STP) hydrogen per hour is under construction. A 3.5 MW pilot plant is planned [127] but a number of material problems must be solved before realization.

The reversal of this process is expected to have a potential in fuel cell applications. This applies to the aforementioned solid polymer electrolysis as well (→ Fuel Cells, Chap. 3.1.2). The direct production of electric power from hydrogen, carbon monoxide or hydrocarbons with air or pure oxygen in fuel cells of this type is still in the first stages of development.

4.2.4. Hydrogen as Byproduct from other Electrochemical Processes

See also → Electrochemistry; → Chlorine.

Electrochemical processes for the production of sodium hydroxide, chlorine and chlorine compounds yield hydrogen as a byproduct. About 3 % of the world hydrogen production, but a higher percentage of the merchant hydrogen, is produced in this way. The economically most important electrolysis is the chlor – alkali process. At present there are three different commercially important technologies to produce sodium hydroxide and chlorine.

In the *mercury process*, hydrogen is generated by decomposition of sodium or potassium amalgam, which is itself formed in a concurrent reaction to the kinetically strongly inhibited direct hydrogen evolution (32) on the mercury cathode (33).

$$2\,H^+ + 2\,e^- \rightarrow 2\,H \rightarrow H_2 \quad (32)$$

$$Hg_x + Na^+ + e^- \rightarrow NaHg_x \quad (33)$$

$$2\,NaHg_x + 2\,H_2O \rightarrow 2\,NaOH + H_2 + 2\,Hg_x \quad (34)$$

The decomposition reaction (34) is carried out in either horizontal or vertical decomposers. Because of the hydrogen overvoltage, a catalytically active decomposition material (technically graphite) is used and high temperatures are necessary. Hydrogen from the amalgam decomposers must be freed from mercury [to <0.002 mg Hg/m^3 (STP)] by cooling, scrubbing with

brine and use of iodine-activated charcoal or a catalytic process.

In the *diaphragm process*, in which the overall reaction (35) occurs, hydrogen is formed on a hollow cathode made of iron, which is separated from the anode region by a diaphragm.

$$NaCl + H_2O \rightarrow 1/2\,H_2 + 1/2\,Cl_2 + NaOH \qquad (35)$$

Both processes are, at this time, being replaced by the membrane process because of environmental and economic reasons.

The *membrane process* accounted for 10 % of the world capacity in 1987. New plants projected are based almost exclusively on the membrane process. Figure 42 shows the principal reactions and products of a membrane cell.

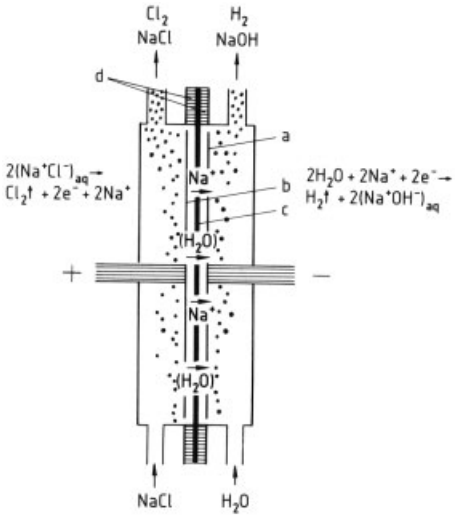

Figure 42. Schematic construction of an electrolysis cell for the production of chloride, sodium hydroxide, and hydrogen using the membrane process (usually bipolar construction) a) Cathode; b) Anode; c) Membrane; d) Insulation

In the membrane process perfluorinated organic polymers with sulfonyl or carboxyl groups are used exclusively as membranes. The anodes are made of titanium, the cathodes of stainless steel or nickel. Membrane cells can be in either unipolar or bipolar arrangement [128]. In addition to the main products chlorine and sodium hydroxide, the process yields high-purity hydrogen (> 99.9 %). Drying and removal of oxygen traces can be carried out, if required.

Hydrochloric Acid Electrolysis. Apart from the chlor – alkali electrolysis the electrolysis of hydrochloric acid (in particular for treatment of weak aqueous solutions to enable their disposal) has some economic importance. The cell products (chlorine and hydrogen) are saturated with water vapor and hydrogen chloride corresponding to the partial pressure of 20 % hydrochloric acid at 75 – 85 °C; both product streams are cooled and the remaining chlorine and hydrogen chloride removed from the hydrogen stream by scrubbing with sodium hydroxide. Hydrogen purity is 99.9 %. For further electrolysis processes of some economic importance, see → Electrochemistry.

4.3. Thermochemical Water Cleavage

In the range $T < 2000$ K and $p = 100$ kPa the cleavage of water is described by:

$$H_2O\,(l) \rightarrow H_2 + 1/2\,O_2 \qquad (36)$$

The reaction is endothermic, the thermodynamic standard values are given below [129]:

Reaction enthalpy	$\Delta H^0_{298} = +286.01\,\mathrm{kJ/mol}$
Reaction entropy	$\Delta S^0_{298} = +163.35\,\mathrm{J\,mol^{-1}\,K^{-1}}$
Gibbs free energy	$\Delta G^0_{298} = +237.31\,\mathrm{kJ/mol}$

The equation for the equilibrium constant is as follows:

$$k_{p_{298\mathrm{K}}} = \frac{p_{H_2} \times p_{O_2}^{1/2}}{p_{H_2O}} = e^{\frac{\Delta G}{R \cdot T}} = 4.2 \times 10^{-76} \sqrt{\mathrm{bar}}$$

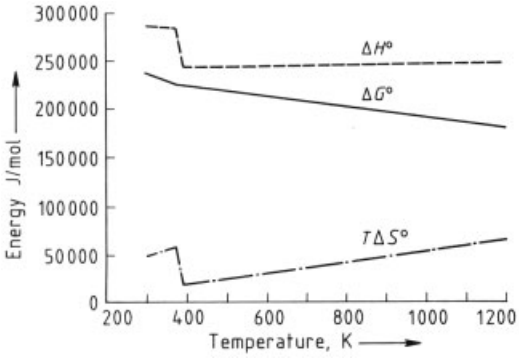

Figure 43. Gibb's energy, enthalpy, and entropy term of enthalpy ($T\,\Delta S^0$) for cleavage of water in a temperature range of 300 – 1200 K

The reaction enthalpy, ΔH^0, is fairly temperature independent, as is ΔS^0. As a result, the Gibbs free energy, ΔG^0, decreases substantially with increasing temperature (see Fig. 43). This behavior is typical for highly endothermic reactions.

The energy required for the production of hydrogen can be delivered in the form of chemical energy (see Section 4.1), electrical energy (see Section 4.2), heat, light or radiation (see Section 4.4), or in some combination of these various energy forms. In many cases, the total process consists of a number of steps using chemical, electrochemical, biochemical or photochemical systems. Purely *thermal cleavage* of water occurs only at >2500 K (see Fig. 48). A commercial realization of this reaction is presently not feasible.

In *thermochemical cyclic* processes reaction (36) is carried out in steps with the aid of chemical redox reactions utilizing energy at lower temperature levels. The substances involved in the reaction sequences are recycled. The great advantage compared to electrolysis is, that the low efficiency, resulting from production of electricity, can be avoided and thermal energy is directly converted into chemical energy. If one of the steps involved is an electrolysis step, the process is named a *hybrid cyclic process.*

The possibility of producing hydrogen via multistage cyclic processes was first pointed out by Funk and Reinstrom [130]. In particular, the possibility of utilizing the heat of high-temperature reactors led to intensive investigations, and a number of processes for laboratory and pilot plants were selected.

4.3.1. Thermodynamics of Closed Cycles

Efficiency. A thermochemical cyclic process is subject to many thermodynamical constraints. The maximum attainable efficiency can be calculated according to [130].

$$\eta_{\mathrm{th}} = \frac{\Delta H^0}{\Delta G^0} \cdot \frac{T_1 - T_2}{T_1}$$

T_1 is the upper process temperature of the heat source, T_2 the lower process temperature of the heat sink. The factor $\Delta \mathrm{H}^0/\Delta \mathrm{G}^0$ is the ratio of the enthalpy to Gibbs free energy for the water cleavage reaction at 298 K and 100 kPa. The factor has a value of 1.2. Table 22 shows calculated efficiencies for T_2 = 298 K.

Table 22. Theoretical thermal efficiency of the thermochemical water cleavage (T_2= 298 K)

T_1, K	η, %	T_1, K	η, %
400	30.7	1000	84.6
600	60.6	1200	90.5
800	75.6	1400	94.8

Thermodynamical considerations show that in the range 300 – 1000 K at least three process stages are necessary to dissociate water thermochemically. At the same time, calculations show that the theoretical efficiency decreases as the number of stages increase [131].

If the heat losses and irreversible chemical reactions that are involved in practical processes are considered, the maximum efficiency attainable amounts to only 50 – 80 % of the theoretical value. However, the overall efficiency reached should still be clearly better than the total overall efficiency of water electrolysis (ca. 30 %).

Entropy-Temperature Diagram. A thermochemical cycle can be displayed graphically in an entropy-temperature diagram. Figure 44 shows this for the MARK 9 process (see Table 23). For simplification it is assumed that the reactions occur at equilibrium conditions (ΔG^0 = 0), that heat losses can be avoided and that no energy is necessary for the transport of reactants. Since the enclosed area corresponds to usable energy, in this case a constant equal to $-\Delta G^0$ = 237.3 kJ/mol, the efficiency of the cyclic process can be determined using other thermodynamic data, e.g., the amount of heat absorbed by the process [132]. The thermodynamics of this process are summarized in [133, 134].

4.3.2. Further Criteria of Thermochemical Cycles

Further criteria must be considered in order to judge the practicability of theoretical cycles. For example, the reactions should be in the temperature range of 300 – 1000 K; the reaction rate should be sufficiently large; chemistry and kinetics should be known. Furthermore, internal heat compensation should be possible; separation of

Table 23. Selection of reaction sequences of thermochemical cycles for water cleavage

Designation, Reaction sequence	Number of reactions	Maximum temperature, °C
Metal – bromine cycles		
MARK 1, (de Beni, Euratom)	4	730
$CaBr_2 + 2\,H_2O \longrightarrow Ca(OH)_2 + 2\,HBr$		
$2\,HBr + Hg \longrightarrow HgBr_2 + H_2$		
$HgBr_2 + Ca(OH)_2 \longrightarrow CaBr_2 + HgO + H_2O$		
MARK-1 B, MARK-1 C, MARK-1 S, MARK 5 use also bromine		
Iron – chlorine cycles		
MARK 9 (C. Hardy, Euratom)	3	650
$6\,FeCl_2 + 8\,H_2O \longrightarrow 2\,Fe_3O_4 + 12\,HCl + 2\,H_2$		
$2\,Fe_3O_4 + 12\,HCl + 3\,Cl_2 \longrightarrow 6\,FeCl_3 + 6\,H_2O + O_2$		
$6\,FeCl_3 \longrightarrow 6\,FeCl_2 + 3\,Cl_2$		
MARK 7, MARK 7 A/B, A 2 (Institute of Gas Technology),		
AGNES (General Electric) are further cycles of the Fe – Cl family		
Vanadium – chlorine cycles		
MARK 3 (Euratom), Allison div. of General Motors,		
RWTH Aachen (Fed. Rep of Germany)	4	800
$2\,VCl_2 + 2\,HCl \longrightarrow 2\,VCl_3 + H_2$		
$2\,VCl_3 \longrightarrow VCl_2 + VCl_4$		
$2\,VCl_4 \longrightarrow 2\,VCl_3 + Cl_2$		
$Cl_2 + H_2O \longrightarrow 2\,HCl + H_2$		
Metal – alkalimetal cycles		
Wentorf "C" (Li, K, Ni, J_2)	6	700
MARK-2 C (De Beni, Euratom, Na, Mn, C, Hg)	6	850
Methane cycles		
Methane – Methanol – Arsenous Oxide Cycle	5	700
$CH_4 + H_2O \longrightarrow CO + 3\,H_2$		
$CO + 2\,H_2 \longrightarrow CH_3OH$		
$CH_3OH + As_2O_4 \longrightarrow CH_4 + As_2O_5$		
$\frac{1}{2}\,As_2O_5 \longrightarrow \frac{1}{2}\,As_2O_3 + \frac{1}{2}\,O_2$		
$\frac{1}{2}\,As_2O_5 + \frac{1}{2}\,As_2O_3 \longrightarrow As_2O_4$		

the reaction products should be feasable using a minimum of energy with a minimum movement of solids. Finally, process and material know-how should be available. A further important condition for the development of a process is the nature of the high-temperature source, e.g., solar concentrator or nuclear high-temperature reactor, and the way this energy is integrated [135, 136].

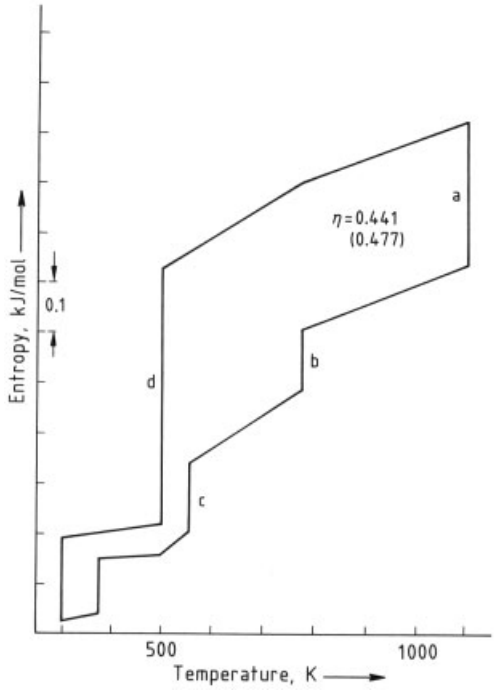

Figure 44. Entropy – temperature diagram for MARK 9 cycle [131]
a) Hydrolysis of iron(II) chloride and hydrogen formation at 1100 K; b) Decomposition of iron(III) chloride releasing chlorine; c) Fusion of iron(III) chloride at 497 K; d) Chlorination reaction of magnetite at 497 K
The entropy changes at 298 K and 375 K include entropy of formation and vaporization of water. Without those values η is 0.477

With the help of computer programs and taking the aforementioned criteria into consideration, several thousand cyclic processes have been suggested. A summary of more than 200 processes can be found in the literature [137 – 139]. After the feasibility from a technical and process point of view has been investigated, 20 to 30 of these processes remain. These, finally, have been studied in greater detail.

Thermochemical cyclic processes can be categorized according to various aspects, e.g., the number of reaction stages, or the maximum temperature. However, it has become accepted to group them in families according to the chemicals involved, e.g., iron-chlorine family (Fe, Cl_2, $FeCl_2$, $FeCl_3$), sulfur-halogen family (SO_2, halogen, X_2), copper-chlorine family (Cu, Cl_2, CuCl, $CuCl_2$). In addition, the basic reaction types for the thermochemical cyclic processes can be classified as follows:

Hydrogen formation usually occurs at low or medium temperatures (ambient to 400 °C). Examples are the reactions of metals (Eq. 37) or metal halides (Eq. 38) with acids or the decomposition of hydrides (Eq. 39).

$$2\,Cu + 2\,HCl \rightarrow 2\,CuCl + H_2 \quad (37)$$

$$2\,VCl_2 + 2\,HCl \rightarrow 2\,VCl_3 + H_2 \quad (38)$$

$$2\,HI \rightarrow I_2 + H_2 \quad (39)$$

Oxygen formation takes place at high temperatures (700 – 1000 °C) by oxygen elimination from oxides or oxygen-containing acids. The thermal cleavage of sulfuric acid (Eq. 40), for example, is one of the best-investigated high-temperature process steps:

$$H_2SO_4 \rightarrow H_2O + SO_2 + 1/2\,O_2 \quad (40)$$

Water is introduced into the cycles and allowed to react at various temperature levels. For example, the Deacon reaction (41) is of great interest at *high temperatures*, while at *low temperatures* the reaction of water with bromine or iodine in the presence of sulfur dioxide [Bunsen reaction (42) known since 1853] is particularly important:

$$Cl_2 + H_2O \rightarrow 2\,HCl + 1/2\,O_2 \quad (41)$$

$$X_2 + 2\,H_2O + SO_2 \rightarrow 2\,HX + H_2SO_4 \quad (42)$$

4.3.3. Thermochemical Cyclic Processes

Table 23 shows a selection of the various "purely thermochemical" reaction systems described in the literature. The Mark I cycle (Mark cycles, nomenclature JRC, i.e., Joint Research Center, Ispra, Italy) with a four-step mechanism was developed by De Beni in 1969. At the moment the processes belonging to the halogen-sulfur family are invoking the most interest. As an example, the sulfur – iodine process (S – I process) developed by General Atomic Technologies [140] will be described in more detail.

The main reactions are sulfuric acid cleavage (43) at high temperature and the Bunsen reaction (42), a low-temperature step, in which the water cleavage takes place. Hydrogen is converted to a hydrogen halide and oxygen is incorporated in the sulfuric acid

$$2\,H_2O + SO_2 + I_2 \longrightarrow H_2SO_4 + 2\,HI \quad (42)$$

$$H_2SO_4 \longrightarrow H_2O + SO_2 + 1/2\,O_2 \quad (43)$$

$$2\,HI \longrightarrow H_2 + I_2 \quad (44)$$

$$H_2O \longrightarrow H_2 + 1/2\,O_2$$

Using the molar amounts suggested by General Atomic, the Bunsen reaction can be written as:

$$16\,H_2O + 9\,I_2 + SO_2 \longrightarrow \begin{matrix}(H_2SO_4 + 4\,H_2O)^1 \\ (2\,HJ + 10\,H_2O + 8\,I_2)^2\end{matrix}$$

The excess of iodine leads to a separation of two liquid phases, a lighter phase of aqueous sulfuric acid (1) and a heavier one consisting of hydrogen iodide, water and iodine (2). The process is subdivided into 4 stages as demanded by the necessary basic operations (Fig. 45 A) [140].

In *stage 1* utilizing the Bunsen reaction, the separation of acidic products H_2SO_4 and HI and oxygen occurs. The oxygen is obtained in a mixture with sulfur dioxide from the sulfuric acid decomposition. This gas mixture is passed through the liquid mixture of water, sulfuric acid, iodine and hydrogen iodide. Here sulfur dioxide reacts according to the Bunsen reaction and oxygen remains as the sole gaseous component. The exothermic Bunsen reaction is performed at 120 °C, to make certain, that the products remain in the liquid phase.

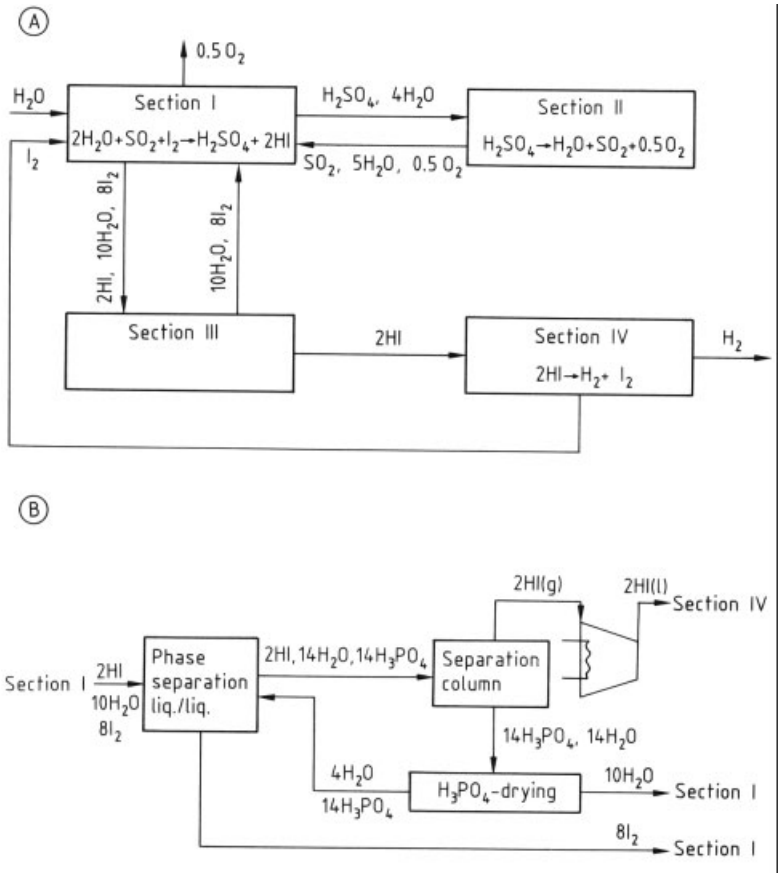

Figure 45. A) Material flows in the S – I process according to General Atomic
B) Section III within the S – I process according to General Atomic

Stage 2 represents the drying of sulfuric acid and the sulfur trioxide cleavage. In this stage pure sulfuric acid is produced in a six-stage drying process at medium temperature. In an ensuing evaporation the dry sulfuric acid decomposes into water and sulfur trioxide. After this, sulfur trioxide is catalytically decomposed to sulfur dioxide and oxygen by using high-temperature energy.

In *stage 3* pure hydrogen iodide is extracted from the heavy product phase of the Bunsen reaction and can then be decomposed economically in stage 4 using low-temperature energy. To obtain pure hydrogen iodide for the decomposition in *stage 4*, the heavy product phase of the Bunsen reaction is separated into three pure fractions. Figure 45 shows a simplified process scheme of this stage. The addition of highly concentrated phosphoric acid to the system causes a new phase separation, whereby the heavy phase contains iodine and the light phase hydrogen iodide, water and phosphoric acid. The light phase can be separated off at moderate temperatures. The gaseous product at the head of the separation column is almost pure hydrogen iodide. This is cooled, compressed to 5 MPa and fed to stage 4 in the liquid state.

The bottom product of the column consists of aqueous phosphoric acid. To be able to recycle the phosphoric acid, it must be freed from the excess water. This drying is achieved in a multistage process with vapor compression and consumes a large amount of electrical energy.

The following suggestions have been made to improve stages 2 and 3: power generation by decompression during sulfuric acid drying [141] and optimization of the hydrogen iodide separation with integrated hydrogen formation [142].

This process has been operated on a laboratory scale with a thermal efficiency of 47 %; the aforementioned improvements and optimization of the heat system is said to make an efficiency of 55 % possible.

Several variations of the S – I process are being investigated, e.g., the NIS process with the system Ni – $NiSO_4$ [143], the Mg – S – I cycle with the system MgO – $MgSO_4$ and the C – I – S process using methanol as a reactant as suggested by Japan Atomic Research Institute [144].

4.3.4. Hybrid Cycle Processes

Thermochemical – electrochemical hybrid cycle processes are a special form of thermochemical cyclic processes. Here an electrochemical reaction is involved. Hybrid cycle processes can, therefore, usually be designed as two-stage processes.

The *electrochemical* reaction stage is normally run at low temperature, and replaces either the hydrogen producing or the oxygen producing reaction. The necessary energy for the electrochemical reaction must be less than that required for direct electrolysis of water. Table 24 summarizes the thermochemical – electrochemical hybrid cyclic processes.

The most important hybrid cyclic process is the so-called Westinghouse cycle (MARK 11, according to the Ispra nomenclature). A large amount of work on this sulfur-family process and some of its steps have been carried out by Los Alamos Scientific Laboratories, Westinghouse Electric Corp., JRC Ispra, KFA Jülich, General Electric and others.

The sulfur hybrid cycle is a simple two-stage cyclic process. The first step is the electrochemical *low-temperature reaction* consisting of the steps (1) cathodic hydrogen formation (Eq. 45) and (2) anodic oxidation of sulfur dioxide to sulfuric acid (Eq. 46).

$$2\,H^+ + 2\,e^- \rightarrow H_2 \tag{45}$$

$$SO_2 + 2\,H_2O \rightarrow H_2SO_4 + 2\,H^+ + 2\,e^- \tag{46}$$

In the *high-temperature reaction* (Eq. 47) the electrically produced sulfuric acid is cleaved into oxygen, water, and sulfur dioxide, the latter is recycled to the anodic process.

$$H_2SO_4 \rightarrow SO_2 + H_2O + 1/2\,O_2 \tag{47}$$

This reaction can be accelerated in the temperature range of 500 – 1000 °C with catalysts (Fe_2O_3, CuO, Pt – TiO_2, Pt – SiO_2). Figure 46 depicts the flow sheet of the MARK 11 process. The stages of developement for the key steps of the process are as follows:

Electrolysis. The desired conditions to be attained for the anodic reactions are:

50 wt % H_2SO_4
SO_2 pressure 100 – 200 kPa
temperature 80 °C

The high anodic overvoltage makes potentials of 680 – 800 mV necessary to obtain current densities of 200 mA/cm^2. To reduce this overvoltage catalysts are being tested. Diffusion of sulfur dioxide from the anode to the cathode and its reduction to sulfur or hydrogen sulfide there must be prevented. This is being attempted by use of H^+-permeable separator membranes (SPE, diaphragms) [146], gas diffusion electrodes as anodes [147], or three-compartment electrolysis cells [148].

Concentration and Cleavage of Sulfuric Acid. The ca. 50 wt % sulfuric acid produced at the anode is first concentrated to maximum 98 wt % in several concentration, temperature and pressure stages, then evaporated at 450 °C and 20 MPa and subsequently decomposed (at 400 – 800 °C into $SO_3 - H_2O$, at $>$ 800 °C into $SO_2 - O_2$). Material corrosion problems occur. Silicon carbide and silicon nitride materials are suitable for the evaporation equipment. For the decomposition of sulfuric acid special alloys with aluminum oxide coating (SS 444, Incolloy 800, Hastelloy G) have been proposed as reactor materials. The sulfur trioxide decomposition has been investigated on a pilot scale at the JRC Ispra in the so-called Christina process. This process has the following special features:

heat provision by hot air
adiabatically-operated cracking reactor with a special construction (see Fig. 47)
downstream heat recovery section.

Figure 47 shows the sulfur trioxide cracker which is constructed for a pressure of 2.5 MPa and, with 11 s residence time, gives 95 % conversion with a crack rating of 12 kW. The results of

Table 24. Thermochemical – electrochemical cycles (hybrid cycles)

Designation, reaction sequence	Number of maximum reactions	Temperature, °C
Sulfur – halogen hybrid cycles		
MARK 13 (JRC Ispra)	3	650 – 850
$Br_2 + SO_2 + 2\,H_2O \longrightarrow 2\,HBr + H_2SO_4$		
$H_2SO_4 \longrightarrow H_2O + SO_2 + \frac{1}{2}\,O_2$		
$2\,HBr \longrightarrow H_2Br_2$ (electrolytic step)		
Sulfur hybrid cycles		
MARK 11 (Westinghouse Electric Corp., JRC Ispra, General Atomic Technologies)	2	900
$H_2SO_4 \longrightarrow SO_2 + H_2O + \frac{1}{2}\,O_2$		
$SO_2 + H_2O \longrightarrow H_2SO_4 + H_2$ (electrolytic step)		
Alkali metal hydride – hybrid cycles		
Me/MeH – hybrid process (F. Behr)	2	700
$H_2O + 2\,Me \longrightarrow 2\,MeH + \frac{1}{2}\,O_2$ (electrolytic step)		
$2\,MeH \longrightarrow 2\,Me + H_2$		
Hydrocarbon – hybrid cycles		
Methane – methanol – methanal process (KFA Jülich)	4	950
$CH_4 + H_2O \longrightarrow 3\,H_2 + CO$		
$CO + 2\,H_2 \longrightarrow CH_3OH$		
$CH_3OH \longrightarrow CH_2O + H_2$		
$CH_2O + H_2O \longrightarrow CH_4 + O_2$ (electrolytic step)		

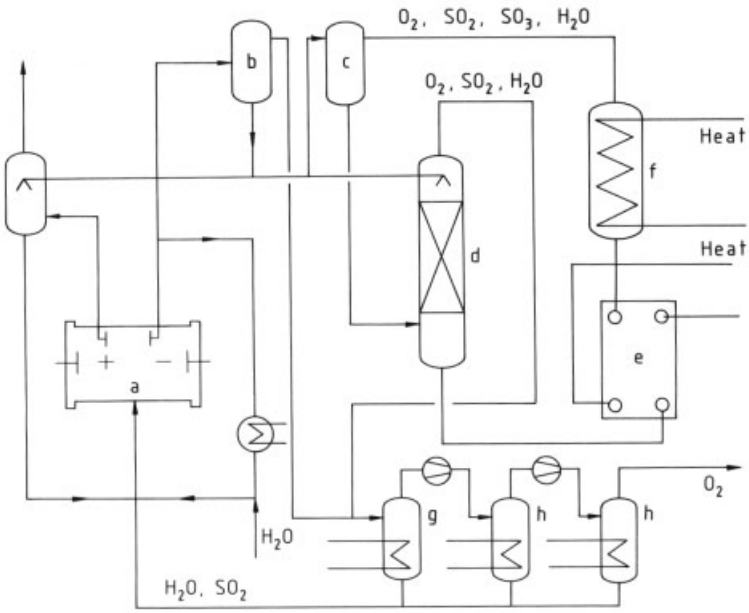

Figure 46. Schematic of the Westinghouse (Mark 11) hybrid sulfuric acid cycle, simplified [145]
a) Electrolysis; b) H_2SO_4 surge tank; c) Acid separator; d) Acid concentrator; e) Acid vaporizer; f) SO_3 decomposition reactor; g) Steam condensor; h) SO_2 condensor

the investigation show that sulfur trioxide cracking (a step of various cycles of the sulfur family), is technically feasible [149].

For the MARK 11 and related processes the theoretical thermal efficiency is 40 – 45 %. At present, an efficiency of 30 % is attainable.

4.4. Other Methods for the Cleavage of Water

All processes mentioned in the following are either still in the laboratory or in the development stage. A review is given by Bockris in [150], where further methods such as *plasmolysis*, i.e., water splitting by high-temperature plas-

mas, *magnetolysis*, i.e., electrolysis using a potential difference created by magnetic induction, and *magmalysis*, i.e., interaction of steam with fresh basaltic lava in volcanic tubes, are presented.

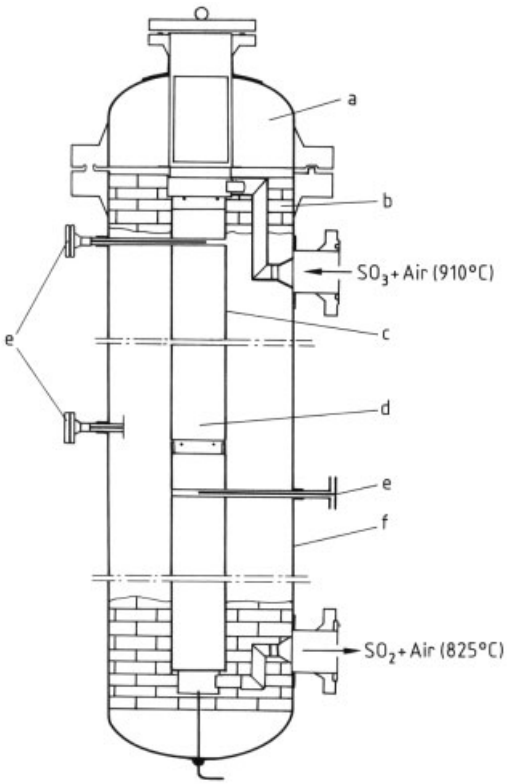

Figure 47. Design of the reactor for SO_3 decomposition for the Christina process
a) Quartz wool; b) Refractory lining; c) Catalyst container (Incoloy 800); d) Catalyst (iron oxide); e) Thermocouples; f) Pressure vessel (500 °C)

4.4.1. Thermolytic and Radiolytic Processes

Water Thermolysis. The direct thermal cleavage of water, theoretically the simplest method and a priori an ideal process, requires very high temperatures. Figure 48 shows the equilibrium composition of dissociating steam at atmospheric pressure as a function of temperature [151]. The six components present to a significant extent are: H_2O, H_2, O_2, H, O and OH. The degree of water dissociation as a function of temperature is:

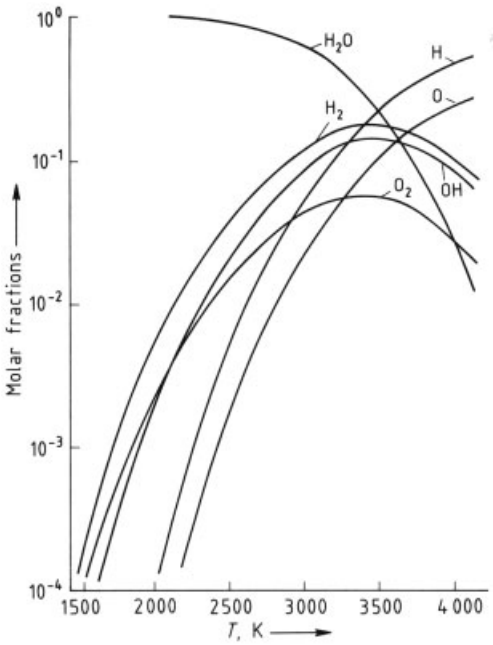

Figure 48. Molar fraction *a* of species for the dissociation of water at thermodynamic equilibrium as a function of temperature starting from pure steam at a pressure of 10^5 Pa

2000 K	0.69 mol %
2300 K	2.64 mol %
2700 K	10.35 mol %
3000 K	22.4 mol %
3500 K	57.43 mol %

Appreciable quantities of hydrogen can only be obtained at temperatures significantly above 2000 K.

An economic utilization of this process is difficult, because of the recombination of the reaction products at the high temperatures. Other problems are associated with the recovery or separation of hydrogen from the hot mixture, conservation and recovery of the high-temperature energy and unsolved material problems.

The three different approaches generally considered are:

1) Catalytic thermal decomposition of water on metallic wires at 1600 K, the small degree of decomposition being compensated for by high reaction rates [152].
2) Decomposition of water in the vicinity of a high-temperature-resistant membrane which allows the removal of one of the products

with accompanying displacement of thermodynamic equilibrium. Stabilized zirconia or porous ceramic membranes look promising [153].

3) Decomposition of water, followed by rapid quenching of product gases. A quenching speed of 10^5 – 10^6 K/s is required. Special quenching arrangements using cold steam or inert gas jets indicate that up to 90 % of the hydrogen formed can be recovered [154].

The research in this area is aimed at the utilization of high-temperature solar or nuclear energy.

Water Radiolysis. Water can also be cleaved by high-energy radiation. The overall formula for the water radiolysis is:

$$H_2O \rightarrow H, OH, H_2, H_2O_2, OH^- (aq), H^+ (aq)$$

The principles of water radiolysis and radiation chemistry in general are described in [155].

Energy from *nuclear sources* is released as high-quantum energy photons (γ-radiation), high-speed particles, either charged (α-particles, protons, and β-radiation), or uncharged (neutrons). The rate of interaction of radiation with a medium, i.e., the rate of energy transfer, is termed linear energy transfer (LET). Pure γ-radiation sources have the smallest, uranium fission fragments the highest value (in water). The radiochemical yield (G value) depends on the LET value of the radiation. The G value is defined as the number of molecules converted per 100 eV absorbed energy. The $G(H_2)$ value is greatly influenced by the physical state and turbulence in the medium as well as the chemical composition.

The irradiation of water in the liquid state with γ-rays (^{60}Co) gives a $G(H_2)$ yield of 0.45, in the vapor state at 110 °C $G(H_2)$ is 5.2 [156]. With ^{210}Po a $G(H_2)$ value of 1.8 can be attained.

A well-known example of hydrogen formation is the undesired dissociation of the reactor coolant water in nuclear reactors (For safety measures see Section 7.6). Hydrogen production coupled with heat production in nuclear reactors has often been proposed or is the subject of experimental research. The most suitable configuration is seen in the so-called homogeneous reactor [157]. Here normal water serves as a solvent for the nuclear fuel (94 % enriched uranyl sulfate) and as a moderator. Using a $G(H_2)$ value of 1.6 a hydrogen yield of 28.8 kg H_2 per day and Megawatt can be calculated. Only a fraction (ca. 35 %) of the energy is used for the formation of hydrogen, the rest is converted to heat.

Hydrogen, along with higher hydrocarbons, is formed during the radiolysis of methane with a $G(H_2) = 6.4$. The radiolysis of higher aliphatic hydrocarbons yields, along with hydrogen ($G(H_2)$ ethane = 6.6, $G(H_2)$ propane = 8.2), a large number of other products [158].

Another indirect process for the production of hydrogen is considered to be of interest. Carbon monoxide, derived from the radiolysis of carbon dioxide, is converted to hydrogen and carbon dioxide in a subsequent shift reaction; carbon dioxide is then recycled. With a $G(CO)$ value of 10 a higher hydrogen yield than obtainable with direct water radiolysis has been calculated [156].

4.4.2. Photochemical or Photoelectrical Water Cleavage

Direct photolytic cleavage of a water molecule leads initially to H and OH radicals

$$H_2O \rightarrow H + OH; \; \Delta H = -457\,kJ/mol$$

The energy necessary corresponds to 1 mol of light quanta with an energy of at least 4.73 eV ($\lambda \leq 262$ nm). This process, however, only occurs in the vacuum UV range at a wavelength of $\lambda \leq 123$ nm, corresponding to a quantum energy of 10 eV [159]. Because of the unavoidable recombination reactions only a small fraction of hydrogen is found in the reaction mixture.

The photolytic cleavage of water with solar radiation is thus not possible; the process must be carried out in stages using several light quanta and with separation of the reactive intermediates. For the development of a process various possible routes can be followed.

Photochemical Systems. It has been known for a long time, that acidic water solutions of transition metal ions such as Cu^{2+}, Fe^{2+}, Eu^{2+}, evolve hydrogen upon irradiation with UV light. The metal ions provide an electron and are thereby oxidized. The quantum yield is relatively high. A cyclic water cleavage with recirculation of the oxidized metal ion back to the initial

(reduced) stage is not possible except with Fe^{3+} and Ce^{4+}.

Efforts are presently concentrated on cyclic photo-redox processes with assistance of photosensitizers. The energy terms of such a system for the cleavage of water are shown in Figure 49. Photon energy, after exciting the sensitizer S to S*, is converted into chemical potential by creating the product ions S^+ and R^- (R is referred to as electron relay compound). This light-induced redox reaction is followed by catalytic steps causing water decomposition [160].

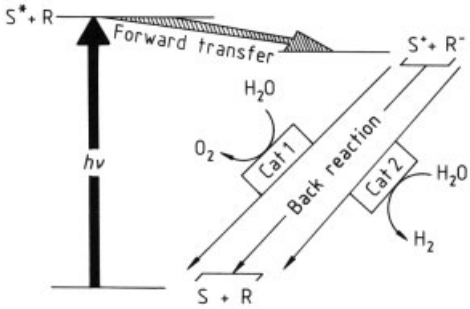

Figure 49. Energy term scheme of a light-induced redox reaction coupled with water cleavage [160]
S = sensitizer; R = electron relay compound; Cat^1, Cat^2 = catalysts

Examples for *sensitizers* are: $Ru(bipy)_3^{2+}$, porphyrine derivatives and acridine dyes such as proflavine. As *electron relay compounds* a viologen derivative, e.g., *N*-methyl-*N'*-tetradecylbipyridine, MV^{2+}, salicylate complexes of Eu^{3+}, V^{3+}, and macrocyclic cobalt complexes are used. Suitable catalysts are finely dispersed particles of platinum for formation of hydrogen and colloidal or macrodispersed RuO_2, which assists in the oxygen generation. A generalized overall reaction scheme is given in Figure 50. Difficulties to be overcome are the prevention of side-reactions and attaining a sufficient rate reaction. The former is achieved by using microheterogeneous systems (instead of homogeneous systems), the latter by using bifunctional catalysts, e.g., TiO_2 particles doped with RuO_2, which serve at the same time as support materials for platinum.

A solution containing 10^{-4} mol/L $Ru(bipy)_3^{2+}$ and 2×10^{-3} mol/L MV^{2+} gives a quantum yield in hydrogen (and oxygen) formation of 2 %, with hydrogen yields being 400 mL/h per liter of substrate. This remains constant over at least 40 h [161].

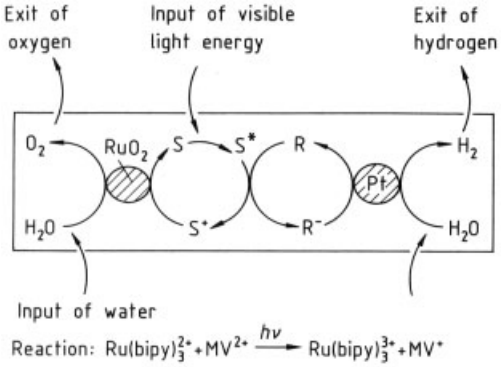

Figure 50. Schematic for cyclic water decomposition in a combined catalytic system [161]

Photoelectrochemical Systems. The photoelectrical water cleavage is based on the absorption of photons in a semiconductor electrode, which is in contact with an electrolyte. One part of the redox process, either oxidation or reduction, takes place on it. The opposing process takes place at the second electrode, thus separating hydrogen and oxygen evolution locally. Figure 51 depicts the energy term scheme of such a photoelectrochemical cell with an n-type semiconductor anode [162]. The steps of the cyclic process can be described as:

1) Absorption of photons creating charge separation by transportation of electrons from the valence band to the conduction band (electron – hole pairs);
2) Abstraction of electrons from the valence band of water, recombination with defect electrons (holes) and oxygen formation;
   Anodic reaction

$$H_2O - 2\,e^- \rightarrow 1/2\,O_2 + 2\,H^+$$

3) Migration of hydrated protons to the cathode;
4) Transfer of electrons from the Fermi niveau of the metal to the protons followed by hydrogen formation.
   Cathodic reaction

$$2\,H^+ + 2\,e^- \rightarrow H_2$$

The choice of the semiconductor is determined by the height of the band gap and its relative

energy level. To cleave water, the energy difference between valence band and conduction band must be at least 1.23 eV; in actual fact, it must be much larger. The edge of the conduction band must be sufficiently above the redox Fermi level for water oxidation.

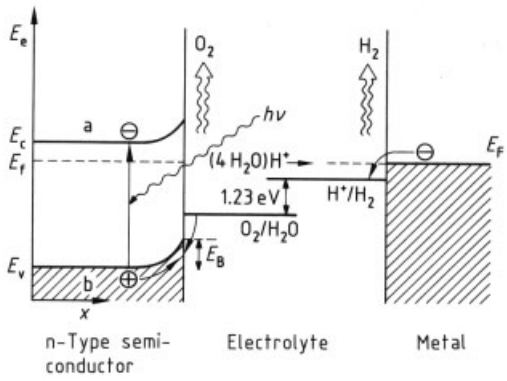

Figure 51. Energy scheme of the photoelectrolysis of water with a $SrTiO_3$ semiconductor electrode
a) Conduction band; b) Valence band
E_F = Fermi energy; E_G = energy gap between valence and conduction band; E_B = "buckling" of the energy level at the boundary layer electrode/electrolyte

With $SrTiO_3$ semiconductor anodes the band levels are at the right height. The band gap, however, is 3.2 eV, so that only the absorption of UV light is effective for charge separation. In case of the TiO_2 semiconductor electrode the conduction band has to be raised by 0.5 V above the hydrogen potential by application of an external voltage. A further complication is the photolytic decomposition of photoactive semiconductor surfaces (photocorrosion) of suitable electrodes [163].

In recent years the *light-induced cleavage* of water in a microheterogeneous semiconductor dispersion has been investigated (see [164]). As semiconductors titanium oxide, titanates, vanadium oxides and cadmium sulfide can be used. The principal mechanism is shown in Figure 52 A. Titanium oxide particles with a diameter of 100 – 500 nm form a transparent dispersion. Locally separated catalyst deposits of platinum and RuO_2 promote the water splitting reactions by reducing protons and forming oxygen; in the case of TiO_2, oxygen normally remains attached to the particle surface in the form of a peroxide.

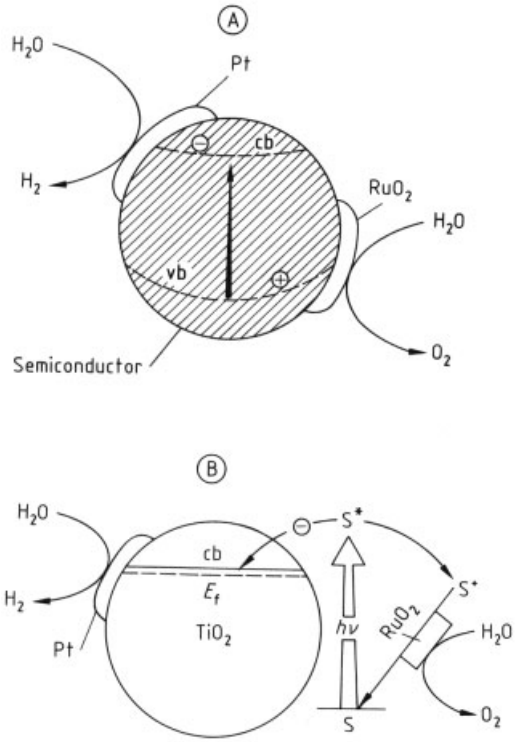

Figure 52. A) Catalytic water cleavage through band gap excitation of colloidal semiconductors
B) Complete water photolysis scheme through sensitization of a semiconductor particle
(vb = valence band; cb = conduction band, E_F = Fermi energy)

For particles of semiconductors with a large band gap a sensitization mechanism is required. Through light excitation, the sensitizer acquires the chemical potential necessary to promote an electron to the conducting band of the particle from where it is transferred to the platinum catalyst deposited on part of the surface. Following this, the redox reaction leading to water decomposition takes place as described above.

Figure 52 B shows a schematic diagram of the complete process. The sensitization of titanium oxide by forming surface derivatives with transition metal complexes shifts the photochemical excitation range down to 600 nm with a maximum at 480 nm, whereas pure titanium oxide exhibits a band-gap transition absorption only $<$400 nm [165]. In principle, it should be possible to use such an absorber system and to attain

conversion efficiencies of the solar water cleavage up to 15 %.

4.4.3. Hydrogen Formation in Biological Systems

The capability of producing molecular hydrogen by biological action is inherent to some microorganisms including *chemotrophs*, i.e., organisms obtaining energy from chemical substrates, and *phototrophs*, i.e., those using light as a source of energy.

The essential step for the biochemical hydrogen formation is the reduction of two protons by the transfer of two electrons. This reaction is brought about by the interaction of appropriate electron-donating enzyme systems. The energy is supplied by any suitable substrate or by a photosystem using visible radiation. The process can take place in free organisms or in immobilized biological systems.

Hydrogen Production from Organic Substrates by Fermentative Bacteria. Some bacteria can be caused to ferment carbohydrates with the development of hydrogen and byproducts such as carbon dioxide. Obligate and facultative anaerobic microorganisms, e.g., various types of *Clostridium*, types of *Ruminococcus, Serratia marcescens*, and *Bacillus polymyxa*, are a means of carrying out this reaction.

In most cases, hydrogen is evolved as the result of anaerobic oxidation of pyruvate, an intermediate in carbohydrate metabolism. Starch, cellulose, and glucose can serve as substrates. The growth conditions of the microorganisms, the pH value of the substrate and the hydrogen partial pressure have a great influence on hydrogen production. Yields range from 0.1 – 2.5 mol H_2 per mole substrate ([166, 167]). The fermentation of carbohydrates is not of any importance from the point of view of hydrogen production. The energy conversion corresponds to ca. 20 % of the energy of combustion of the organic substrates.

Photobiological Production of Hydrogen. The ability to set hydrogen free with the aid of solar energy is found in a number of phototropic organisms such as purple bacteria, green bacteria, cyanobacteria (procaryotes) and several algae (eucaryotes). The majority are aquatic species. An overview is presented in [167].

The mechanisms vary from organism to organism, the main steps, however, are similar to those of the photosynthesis using electron-transporting photosystems connected in series. For example, with green algae, such as the Chlamydomonas types, the mechanism of the photobiological water decomposition follows the scheme depicted in Figure 53.

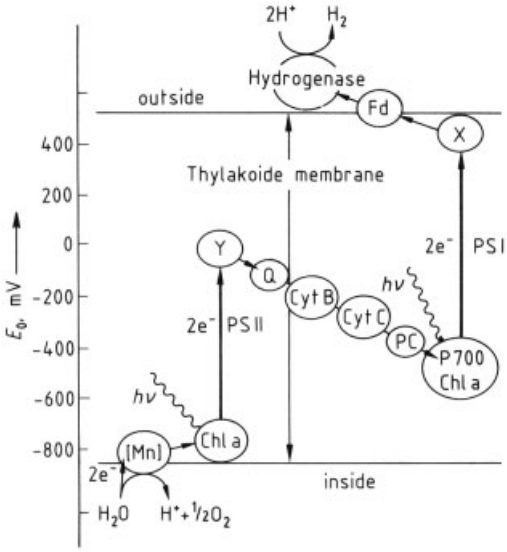

Figure 53. Photosynthetic electron transport system of hydrogen production [168]
PSI, PSII = photosystems I and II; Y, X = primary electron acceptors of photosystems I and II; Chl = chlorophyll; Q = plastoquinone; Cyt B, Cyt C = Cytochromes B and C; PC = plastocyanine; [Mn] = manganese carrying water oxidizing enzyme; Fd = Ferredoxin

The active reaction centers, together with light-harvesting antenna pigments, are located in the so-called thylakoide membrane of chloroplasts. After irradiation, photosystem II (PS II) extracts electrons from water at a redox potential of + 0.85 V with the assistance of a manganese-containing enzyme. The electron acceptor of PS II delivers electrons to photosystem I through a down-hill electron chain. Photosystem I elevates the electrons to an energy level which allows the reduction of protons to hydrogen (E_0 = − 0.42 V). For the *normal* photosynthetic carbon dioxide fixation the electrons are transferred by means of the NADP – NADPH system at E_0

= − 320 mV, and carbohydrates are generated from carbon dioxide. In the case of *hydrogen formation*, however, the electrons are transferred to the protons by means of the low-molecular mass protein ferredoxin, a powerful reductant, and the enzyme hydrogenase.

Oxygen evolves on the inside and the ferredoxin reduction and hydrogen formation takes place on the outside of the thylakoide membrane (see Fig. 53). Since oxygen diffuses freely through the membrane and deactivates the extremely sensitive hydrogenase, such a system is of little interest for the commercial biophotolysis of water.

Purple bacteria lead to photosynthesis with sulfide, thiosulfate, sulfur or organic compounds as electron donors. Some strains (like *Rhodopseudomonas capsulata*) produce hydrogen and carbon dioxide during irradiation in the presence of organic compounds such as maleate, succinate or especially lactate [169]. Some mutants of *Rh. sphaeroides* may completely oxidize glucose to carbon dioxide and hydrogen. The necessary conditions (low concentrations of N-containing compounds and the absence of molecular nitrogen) indicate that the hydrogen photoproduction is catalyzed by the enzyme nitrogenase. The energy supply is most probably by photosystems I and II and the reduced electron carrier ferredoxin. At the moment, work is proceeding to develop an economical process for the photoproduction of hydrogen from highly polluted waste water using purple bacteria [170].

Cyanobacteria (blue-green algae) represent the most numerous group of phototropic procaryontes. Some of them are able to produce hydrogen. Many filamentous cyanobacteria (e.g., *Anabaena cylindrica* or *Nostoc muscorum*) have special types of cells (heterocysts) in their filaments of vegetative cells. These heterocysts contain the enzymes nitrogenase and hydrogenase, but are deficient in the photosystem II, and are thus not able to cleave water and to produce oxygen. The exceedingly oxygen-sensitive nitrogenase remains active because evolution of oxygen by photosystems I and II is confined to the vegetative cells. The carbohydrate of the vegetative cells provides the reductant for the nitrogen reduction to ammonia, respectively for hydrogen formation. Figure 54 shows schematically the interaction of the metabolism of vegetative cells and heterocysts [171]. The rate of hydrogen production of cyanobacteria is low, yet the feasibility with such systems is considered to be favorable, because hydrogen evolution takes place at ambient conditions and it is expected that suitable mutants can be selected.

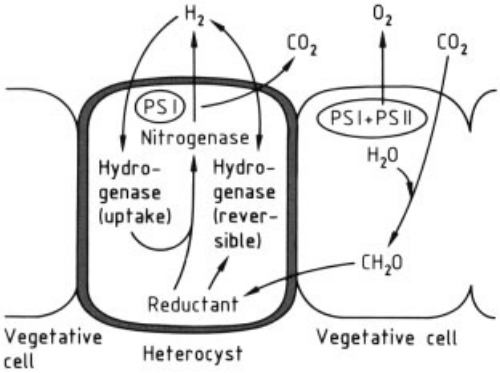

Figure 54. Model of hydrogen metabolism by heterocystous blue-green algae
PSI, PSII = Photosystems I and II

Cell-free systems containing chloroplasts, hydrogenases and an electron carrier such as ferredoxin, sometimes immobilized, have been investigated. In a comparatively short period of time a considerable increase in the rate of hydrogen evolution and stability of such systems has been achieved. Latest data show, that this process can go on for ca. 6 h with a rate of hydrogen production amounting to 100 mmol per hour and gram of chlorophyll [172]. Reasons for the stop of the reaction are inhibition of hydrogenases by oxygen, loss of activity of the chloroplasts and autooxidation of electron carriers.

Table 25 shows hydrogen evolution rates by phototropic microorganisms and cell-free systems [167]. The ultimate aim is the development of hydrogen-producing photoreactors containing artificial enzyme systems, but results are not promising at present.

4.5. Other Chemical Processes

4.5.1. Hydrogen from Conversion of Metals

Alkali and alkaline earth metals react with water or steam according to Equation (48) to yield

Table 25. Maximum rate of hydrogen evolution by biological systems [167]

Phototropic microorganisms	H_2 evolution per hour and gram dry biomass	
	mL	mmol
Purple bacteria		
Rhodospirillum rubrum	146	6.5
Rhodopseudomonas palustris A	54	2.4
Rh. capsulata SL	130 – 150	5.8 – 6.7
Rh. capsulata B 10	300 – 500	13.4
Rh. capsulata LB 2	178	7.9
Thiocapsa roseopersicina	13	0.6
Cyanobacteria		
Anabaena cylindrica B 629	5 – 40	0.2 – 2.0
An. variabilis	32	1.3
Spirulina platensis	9	0.4
Green algae		
Chlorella vulgaris	4	0.2
Chlamydomonas reinhardii 137 C	45	2.0
Chl. moevussii ICC 97	8	0.4

Cell-free systems*	H_2 evolution per hour and gram chlorophyll		Functioning
	mL	mmol	time, h
Chp + Fd + H_2-ase (*C. pasteur*)	200 – 350	9.0 – 15.5	3.0 – 6.0
Chp + Fd + H_2-ase (*Th. roseopersicina*)	110 – 220	5.0 – 10	3.0 – 6.0
Chp + Fd + H_2-ase (from various sources)	450 – 900	20 – 40	4.0

* Selected basic components: chloroplasts of spinach (Chp), ferredoxin (Fd), hydrogenases of various sources; electron donor H_2O; the experiments were carried out in the presence of O_2-scavengers

hydrogen. For hydrogen production in the laboratory the reaction of metals with acids or bases is still used (Eq. 49 and 50).

$$Me + H_2O \rightarrow 1/2\,H_2 + MeOH \quad (48)$$

$$Zn + 2\,HCl \rightarrow H_2 + ZnCl_2 \quad (49)$$

$$Al + NaOH + 2\,H_2O \rightarrow 3/2\,H_2 + NaAlO(OH)_2 \quad (50)$$

Aluminum, when the surface has been activated by amalgamation, reacts with *hot water* with hydrogen evolution [173]. Zinc, that has been activated with copper, can split *water vapor*.

Hydrogen can be obtained from metal hydrides by heating them as well as by subjecting them to the influence of water (→ Hydrides, see Section 9.3.1.2). For certain purposes, especially in out-of-door duties (balloons) hydrogen can be produced from lithium hydride, which is light and easily transported (2.8 L H_2 per gram of LiH), from calcium hydride (1.06 L per gram of CaH_2) or from complex hydrides, such as lithium alanate (2.36 L per gram of $LiAlH_4$).

The steam – iron process, which is one of the oldest ways of producing hydrogen, has been subject to reawakened interest. In principle, it is a cyclic process for water cleavage, whereby coal is consumed. The principles of the steam – iron process is shown in Figure 55. In the first step, coal is gasified with steam and air to produce a reducing gas containing carbon monoxide and hydrogen (lean reducing gas). This gas is reacted with iron oxides in the second stage to produce reduced forms of iron oxides. The reduced species are then reoxidized in the third step of the process with water to form the original oxides at the same time producing hydrogen.

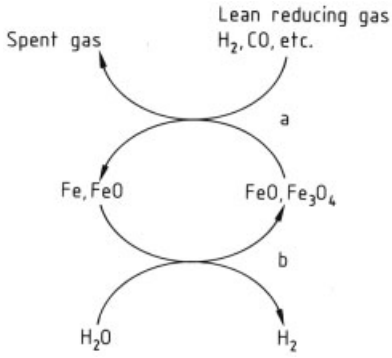

Figure 55. Principle of the steam – iron process
a) Iron oxide reduction reaction; b) Water cleavage reaction

Characteristic data for hydrogen production by the steam – iron process in generators, as they were previously used, are:

Table 26.

Periodical operation, cycle time	15 – 30 min
reduction time : oxidation time	2 : 1
mean reaction temperature	700 – 900 °C
hydrogen production per generator	250 m^3/h

Continuous production of hydrogen can be achieved if reduction and oxidation of the solids occur in two separate reaction zones and the solid is transported between them. New process suggestions [174] incorporate separated fluidized beds, as can be seen from Figure 56. The reduction gas is produced externally in a coal – steam – air gasification stage (a). The main disadvantage of the steam – iron process is that only 60 % of the reduction potential of the gas is utilized. Power production by both gas and steam turbines and production of process steam may be used to compensate for this.

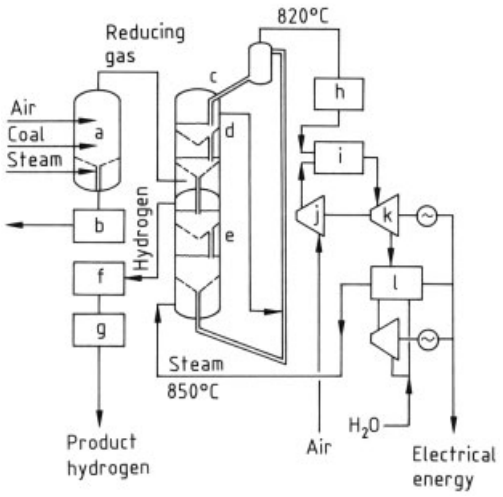

Figure 56. Process diagram of the continuous hydrogen production by the steam – iron process
a) Reducing gas producer; b) Ash disposal; c) Steam – iron system; d) Reducter; e) Oxidizer; f) Waste heat recovery; g) Desulfurization; h) Dust removal; i) Combustor; j) Air compression; k) Gas turbine; l) Steam generation with steam turbine

Other redox systems for water cleavage which, according to thermodynamics are more efficient than iron, have been suggested, e.g., Zn – ZnO dissolved in lead, 300 – 500 °C, 10 – 20 MPa [175], and Sn – SnO_2 dissolved in tin, ca. 800 °C, 2 MPa [176].

4.5.2. Hydrogen from Ammonia

Ammonia is easily thermally decomposed according to the reaction:

$$2\,NH_3 \rightarrow N_2 + 3\,H_2 \quad \Delta H_{298} = +91.86\,kJ/mol$$

The endothermic reaction is favored by high temperature and low pressure and is accelerated by the presence of nickel or iron catalysts. From one kilogram of ammonia 1.97 m^3 (STP) of hydrogen and 0.66 m^3 (STP) of nitrogen are obtained with an energy requirement amounting to 2.7 MJ without consideration of preheating and evaporation. The residual ammonia concentration is usually lower than 500 ppm (mL/m^3) depending on the equilibrium conditions. Figure 57 shows the corresponding residual ammonia concentrations at 100 kPa with the temperature as parameter. At higher pressure, a higher ammonia content remains in the product gas (e.g., 1000 °C, 3 MPa: NH_3 residual concentration 0.2 vol %).

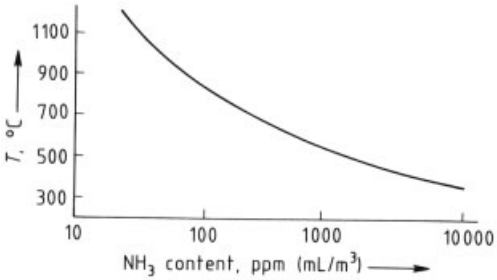

Figure 57. Residual ammonia concentration corresponding to equilibrium of ammonia formation reaction at 100 kPa

The reaction is conducted commercially at 800 – 900 °C. Standard plants for 1 – 100 m^3 (STP)/h are heated by a separate fuel gas and require water to cool down the product gas. The process can also be conducted autothermally, either by burning a part of the product hydrogen or by preigniting ammonia before the catalyst reactor. This results, however, in a mixture containing less hydrogen (ca. 50 vol %) and containing the product of combustion, water vapor. Usually carbon-free combustion air is used to avoid traces of carbon dioxide and carbon monoxide in the product gas [177].

The hydrogen – nitrogen mixture produced by cracking can be used without further treatment in various areas, e.g., as a protective atmosphere in metal processing (see Section 8.2), or for catalytic oxygen removal from gases. For the recovery of pure hydrogen on a small scale, suitable process steps can be used, e.g., pressure-swing adsorption, diffusion cells (see Section 5.5) or hydride technique (see Section 9.3.1.2).

The possibility of hydrogen generation from ammonia leads to consideration of the use of anhydrous liquid ammonia as medium for hydrogen distribution and storage (ammonia as energy carrier, see Section 9.4). Liquid ammonia contains 17.8 wt % hydrogen, which is 50 % more hydrogen per volume than liquid hydrogen [178].

4.5.3. Hydrogen from Methanol

Hydrogen and carbon monoxide can be obtained from the decomposition of methanol by reversal of the synthesis reaction. The endothermic decomposition occurs at temperatures >700 °C without a catalyst, or at 300 – 450 °C on catalysts based on copper – nickel or zinc –chromium alloys. Higher hydrogen yields are obtained by catalytic steam reforming of methanol. The process proceeds via initial methanol decomposition (Eq. 51) followed by a water-gas shift reaction (Eq. 52) as shown in the overall equation (Eq. 53).

$$CH_3OH \longrightarrow CO + 2\,H_2 \qquad \Delta H_{298} = +\,91.7\ \text{kJ/mol} \quad (51)$$

$$CO + H_2O \longrightarrow CO_2 + H_2 \qquad \Delta H_{298} = -\,41.0\ \text{kJ/mol} \quad (52)$$

$$CH_3OH + H_2O \longrightarrow CO_2 + 3\,H_2 \qquad \Delta H_{298} = +\,50.7\ \text{kJ/mol} \quad (53)$$

Information on thermodynamic and kinetic investigations, suitable catalysts and a summary of literature, is given in [179 – 181].

The reaction is carried out technically at pressures of 0.7 – 3 MPa on CuO – ZnO or CuO – Cr_2O_5 catalysts. The molar ratio of water to methanol will vary from 0.67 to 1.5; excess steam lowers the risk of carbon formation.

Hydrogen production from methanol is used in small to medium-sized plants (some of which are mobile) for the production of 1 – 2 000 m^3 (STP)/h. Purification of the product gas is performed by carbon dioxide scrubbing, pressure-swing adsorption or (especially for small units and high purity), by diffusion through a palladium-silver membrane. Figure 58 shows the schematic of a methanol cracker for 50 m^3 (STP)/h of hydrogen at 1.4 MPa using a PSA purification unit to give 99.9999 % purity. 1.5 m^3 (STP) of hydrogen are produced per kilogram of methanol.

In Berlin, peak requirements for town gas are covered by methanol cracking. At 1.5 – 20 MPa and ca. 500 °C endothermic methanol reforming reaction and exothermic methanation of the carbon monoxide takes place and a mixture with town gas quality (ca. 50 % H_2, 25 % CH_4, 4 % CO, 20 % CO_2) is obtained. The investment costs are ca. 40 % lower than for a naphtha reformer and the operating costs are also favorable, so that the gas production costs are relatively low, for the small number of days with peak loads [182].

4.5.4. Hydrogen from Hydrogen Sulfide

A potential source of hydrogen is hydrogen sulfide which can be obtained in large amounts from scrubbing processes for synthesis and natural gas as well as from desulfurizing processes in refineries. Normally, hydrogen sulfide is converted to elemental sulfur by means of the Claus process or by other oxidizing processes. The recovery of hydrogen and sulfur from waste hydrogen sulfide is an interesting alternative to the manufacture of sulfur alone.

The decomposition reaction is endothermic. At temperatures <1800 K the equilibrium position is thermodynamically unfavorable with respect to hydrogen formation (see Table 27) [183].

Table 27. Calculated equilibria concentration of hydrogen in the decomposition of hydrogen sulfide at 100 kPa [191]

Temperature, K	Equilibrium concentration, mol %
400	1.3×10^{-3}
500	6.1×10^{-3}
600	2.0×10^{-2}
700	4.8×10^{-2}
900	1.9
1073*	7.1
1200	13.1
1400	25.6
1600	37.7

* $K = 1.45\times10^{-2}$.

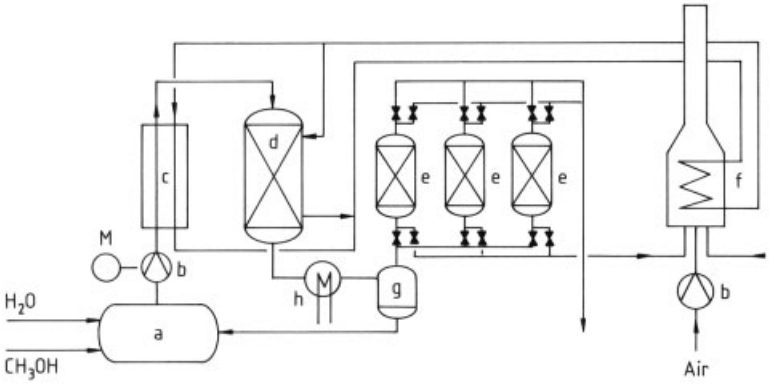

Figure 58. Methanol reformer with pressure swing adsorption purification for the production of 50 m^3 (STP) hydrogen per hour, purity 99.9999 vol % (German Linde)
a) Methanol/water vessel; b) Pump; c) Preheater; d) Reformer; e) Adsorber; f) Heater for heat transfer medium; g) Condensate feedback; h) Cooling water

$$2\,H_2S \rightarrow 2\,H_2 + 1/4\,S_8 \quad \Delta H_{298} = 84.90\,kJ/mol$$

The reaction proceeds readily in the presence of catalysts, e.g., platinum – cobalt (at 1000 °C) [184], disulfides of molybdenum or tungsten (at 800 °C) [185], or other transition metal sulfides, preferably supported on alumina (at 500 – 800 °C) [186].

Development work to increase hydrogen yield and thus to establish commercial use of hydrogen sulfide decomposition, suggests several approaches to avoid thermodynamic restrictions.

Cyclic Processes. Thermodynamically favorable cycles have been suggested, e.g.:

$$H_2S + I_2 \rightarrow 2\,HI + S \qquad (54a)$$

(30.0 MPa, 300 K)

$$2\,HI \rightarrow H_2 + I_2 \qquad (54b)$$

(600 K, 70 MPa, activated carbon) [187]

$$H_2S + CO \rightarrow H_2 + COS \qquad (55a)$$

(470 K, 100 kPa, over COS, NiS)

$$COS \rightarrow CO + S \qquad (55b)$$

(1000 K, 100 kPa) [188]

$$a\,H_2S + H_xC_y \rightarrow y\,CS_2 + (a+x)/2\,H_2 \qquad (56a)$$

$$y\,CS_2 + y\,SO_2 \rightarrow y\,CO_2 + 3\,y/2\,S_2 \qquad (56b)$$

$$y/2\,S_2 + y\,O_2 \rightarrow y\,SO_2 \qquad (56c)$$

(suggested [189])

Equilibrium Displacement. The hydrogen yield can be considerably enhanced by removing either sulfur or hydrogen from the reaction system, thereby shifting the equilibrium. A variety of methods have been considered for the separation of hydrogen from hydrogen sulfide in hot gas streams. Examples are the use of zeolitic, polymeric, metallic, glass and ceramic oxide membranes, pressure-swing adsorption and thermal diffusion [190]. The hydrogen yields can be increased to twice the equilibrium value by diffusion through Vycor-type glass membranes or a microporous alumina membrane at 1000 °C without degradation of the latter [191]. Laboratory experiments using thermal diffusion columns at moderate to high temperature showed effective separation of hydrogen sulfide decomposition mixtures yielding hydrogen concentration $> 90\,\%$ [190].

Economic realization of hydrogen sulfide cleavage would provide commercial products and offer the possibility of replacing Claus processes and of recycling hydrogen in refinery hydrodesulfurization processes. However, energy has to be provided at relatively high temperatures. Research is focused on (1) thermal decomposition processes using concentrated solar radiation or (2) photoelectrochemical hydrogen sulfide splitting by irradiation with visible light using colloidal semiconductor electrodes (see Section 4.4.2, [192]).

4.5.5. Hydrogen as Byproduct

In industrial organic chemistry reasonable amounts of hydrogen are often generated. The amounts are particularly large in the petroleum refineries within the area of catalytic reforming. The most important reactions here are thermal or catalytic cracking, dehydrogenation and oxidation (see Table 28 and Sections 4.1.4 and 4.1.5).

4.6. Economic Aspects

At present 77 % of the hydrogen produced is from petrochemicals, 18 % from coal, 4 % by electrolysis of aqueous solutions and at the most 1 % from other sources. A review of the cost structure of hydrogen production will, therefore, pay particular attention to the production methods described in Section 4.1. Electrolytic processes are also used under certain economic circumstances and are, therefore, included here and in a prognosis regarding the future supply of industrial hydrogen. For predictions of hydrogen production costs for use as an energy carrier see Chapter 9.

4.6.1. Analysis of the Cost Structure

Hydrogen and hydrogen-rich synthesis gases (in particular H_2 – CO and H_2 – N_2) are either produced directly in plants especially built for that purpose or are recovered as a byproduct. In areas with highly concentrated industrial sites, such as mid-Europe, the ratio of directly to indirectly produced hydrogen is almost 1 : 1 [193]. In the developing countries and in countries with industrial sites widely separated from one another, the fraction of directly produced hydrogen is much larger than the fraction recovered in combined plants.

According to the broad range of feedstocks and the highly developed production processes from each of these feedstocks, an analysis of the cost structure depends on the local conditions, i.e., on the availability and price of the feedstocks. In many countries feedstock prices, such as those used for the direct production of hydrogen, are subject to intervention by the government. Heavy taxation is the rule, but subsidies also occur. Further uncertainties in the cost comparison are the various safety and environmental standards in each country and region which to a lesser extent, however, lead to different hydrogen costs.

For the conditions in the Federal Republic of Germany in 1983 costs for direct production of hydrogen have been calculated [194]. The feedstock prices (Fig. 59) include costs for the feedstock itself and, because in the cases considered the feedstock is also used as fuel, the fuel costs. The rest are capital, material and other energy costs (without the feedstock), personnel and administration costs. They lead to a typical situation, which is also found for other countries in which the feedstock is available at world market prices: Steam reforming of natural gas exhibits the lowest investment costs.

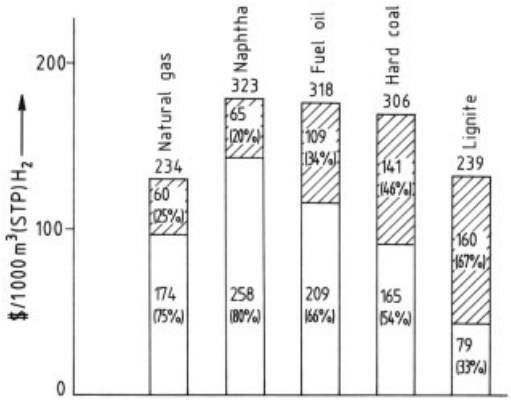

Figure 59. Feedstock and production costs for hydrogen in the Federal Republic of Germany in 1983 in DM/1000 m^3 (STP) H_2; numbers in columns converted to $ by the factor 1.8 (scale on the left)
plain area = costs of feedstock; hatched area = costs of production

The costs of hydrogen production from lignite are almost similarily low, whereby the low feedstock prices for surface-mined coal offsets the high cost of the plant. Whereas the much higher cost of hydrogen from naphtha or heavy fuel oil is a situation found worldwide, the high cost for hydrogen from hard coal is a special case limited to the Federal Republic of Germany, and reflects the special coalmining conditions there. On the world market the cost for coal is usually only slightly higher than the cost for lignite, so

Table 28. Reactions in industrial organic chemistry providing hydrogen

Reaction	Product	Process/Others
Thermal and catalytic cracking		
Hydrocarbons, e.g., $2CH_4 \xrightarrow{\Delta T} C_2H_2 + 3H_2$	acetylene	generally not used anymore. 57% H_2 in crackgas
Hydrocarbons, e.g., $C_2H_6 \xrightarrow{\Delta T} C_2H_4 + H_2$	ethylene	ethane cracking in ethylene plants
Reforming processes in refineries		250 m^3 H_2 per tonne of naphtha
Dehydrogenations		
C_4-fraction: 	butadiene	Dow process, Houdry process
n-Paraffins $CH_3-(CH_2)_nCH_3 \longrightarrow R-CH=CH_2$	higher olefins	UOP process
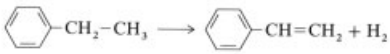	styrene	
cyclohexanol–cyclohexanone mixtures	phenol	partly commercially used
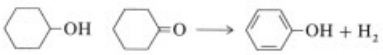		
Oxidations		
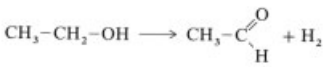	acetaldehyde	Carbide and Carbon Corp.
2-Propanol *sec*-Butanol 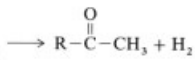	acetone methylethyl ketone	Standard Oil process IFP process
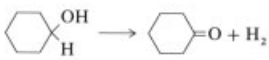	cyclohexanone	step in caprolactam production
Miscellaneous reactions		
$2CH_3-CH_2-OH \longrightarrow$  $+ H_2O + H_2$	butadiene	Lebedew.process, obsolete, of interest for developing countries
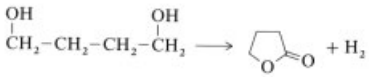	butyrolactone	BASF process, use as solvent
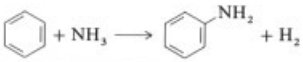	aniline	Du Pont, development state

that the cost for hydrogen from hard coal should be much less.

The influence of the feedstock price is shown in Figure 60. The dashed lines correspond to the feedstock prices and the resulting hydrogen production costs in the Federal Republic of Germany in 1983 and correspond with the data given in Figure 59.

As long as local conditions do not lead to large changes in the capital-dependent costs (ordinate of Fig. 59) the given presentation can be used to give a rough estimate of hydrogen costs and comparisons between various feedstocks by substituting local and actual prices.

The results in Figure 59 and 60 are for a capacity of 100 000 m^3 (STP)/h, which is a very large plant, although not unusual. If the dependence of the hydrogen production cost on plant capacity is required, then the simplified assumption may be made that the *utility costs* are independent of the capacity and that the *investment costs* become relatively less important as long as a large one-train plant can be built. If a modular construction is used, the investment costs do not decrease with increasing plant size. The upper limits for one-train units are ca. 500 m^3 (STP)/h for electrolysis units, ca. 80 000 m^3 (STP)/h for partial oxidation and ca. 100 000 m^3 (STP)/h for steam reforming plants.

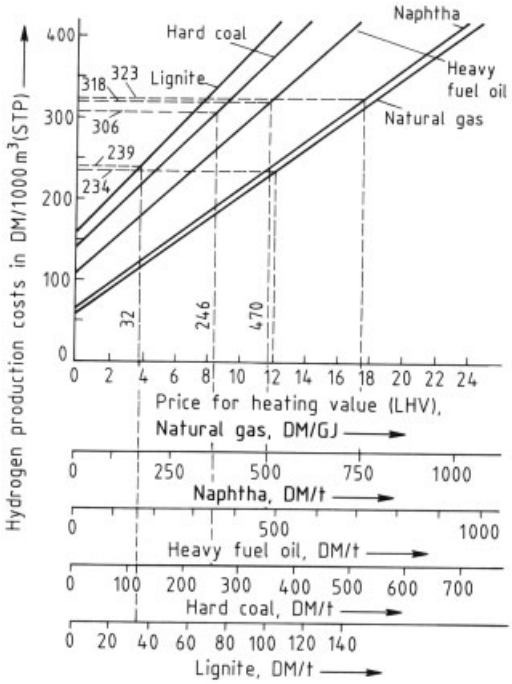

Figure 60. Production costs for H_2 as a function of feedstock price (Federal Republic of Germany, 1983)

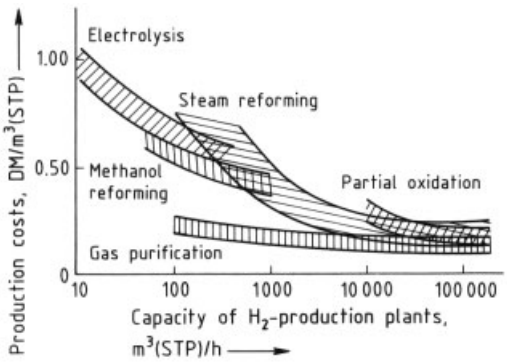

Figure 61. Production costs for H_2 as a function of the production process and plant capacity [195]
Basis of the cost determination:Investment costs: 1983, Federal Republic of Germany
Natural gas: 8.5 DM/GJ, HHV
Fuel gas: 8.5 DM/GJ, LHV
Power: 0.09 – 0.15 DM/kWh
Naphtha: 650 DM/t
Electrolysis: boundary limits 0.15 – 0.09 DM/kWh
Methanol reforming: boundary limits 525 – 400 DM/t
Steam reforming: boundary limits naphtha – natural gas
Partial oxidation: boundary limits heavy fuel oil 300 DM/t,residues 100 DM/t

Gas purification plants, in particular pressure-swing adsorption plants, are built in modules from ca. 50 000 m^3 (STP)/h upwards, so that a reduction in costs on capacity increase for larger plants is not to be expected.

For comparison of hydrogen plants with a capacity of ca. 10 m^3 (STP)/h, it makes sense to choose plant types that would not be considered for very large plants, e.g., electrolysis plants or methanol reformers. Figure 61 shows the hydrogen costs as a function of the capacity for Europe in 1983. In addition to these production processes solely for hydrogen, the costs of recovery of hydrogen by means of pressure-swing adsorption from a hydrogen-rich refinery off gas are also given. In this case only the difference in heating value of the refinery gas before and after the hydrogen removal is used for calculation of the feedstock price. For the investment cost the cost of a pressure-swing adsorption unit without any further prepurification can be taken. The range of costs is caused by the additional expenditure for feedstock compression to adsorption pressure. Plants of this type up to a capacity of ca. 100 000 m^3 (STP)/h feed gas have been built.

A similar curve for U.S. prices of hydrogen was developed in 1978 with forecasts until 1980 [197]. Figure 61 also contains average commercial prices for 5580 m^3 (STP)/h merchant hydrogen which exceed prices for electrolytically produced hydrogen from a plant size of 0.1×10^6 scf/d (see Section 9.4) on up.

The consequences of part-load operation of the plant also determines the choice of the hydrogen-production process. For a low-capacity rating, processes with low investment costs are preferred, because in this case the product cost depends more or less directly on the necessary feedstock costs and is not influenced by writing off an expensive high-capacity plant. For hydrogen plants in the lower capacity range (ca. 100 – 500 m^3 [STP]/h) electrolysis or methanol reforming is the best choice. For large plants this factor leads to the choice of steam reforming plants using natural gas.

4.6.2. Prognosis of the Hydrogen Costs

A short-term prognosis of the hydrogen cost development for industrial use (see Chap. 9 for hydrogen as energy carrier), should be oriented

on the present stable supply situation and technically well-proven processes. With the aid of Figure 60 such a prognosis can be made. It shows that in the future hydrogen will still be preferentially produced on a large scale from hydrocarbons. The prognosis can therefore be reduced to investigating price and availability of hydrocarbons in the coming years.

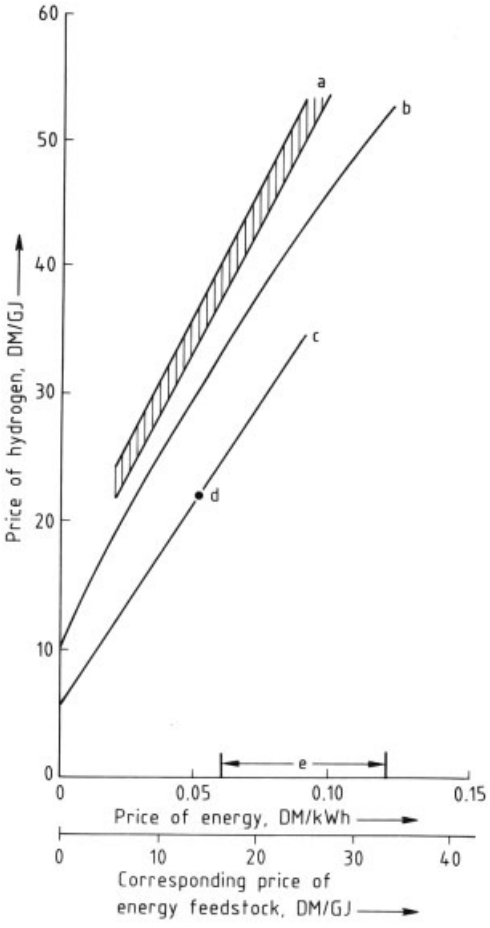

Figure 62. Cost prospects for electrolysis as compared to the main process for hydrogen production, steam reforming of natural gas [196]
a) Conventional electrolysis; b) Advanced electrolysis; c) Natural gas; d) Natural gas price (Mid Europe); e) Price range for electrical energy (Mid Europe)

Should it become possible to decouple the price of electrical energy from the price of fossil fuels by using nuclear energy or alternative energy sources and to make electrical energy relatively cheap, the electrolysis process could play an increasingly important role. Figure 62 shows what price changes must occur to assure electrolysis a greater market fraction on a purely economic basis.

5. Purification of Hydrogen

In many cases it is necessary to purify technical grade hydrogen by using a variety of processes. These must be chosen in accordance with the final use of the hydrogen to give an economically satisfactory result. Chapter 5 gives an overview of the technically important purification steps. They are classified according to the physical and chemical operations involved in the separation processes.

Frequently in industrial-scale plants combinations of the various processes are used. In addition, several alternative processes may be available and may be used depending on the economic situation. In Chapter 4 and Chapter 7 some examples of typical combinations of various gas production and purification processes are given.

5.1. Low-Temperature Processes

The large temperature difference between the boiling point of hydrogen and that of the most frequent impurities is the basis of the low-temperature process (LT process) for the purification of hydrogen. Table 29 shows important properties of hydrogen and the most frequent impurities present in the hydrogen to be treated. The impurities are condensed or sublimated. Low-temperature rectification processes are used, if the impurities are also to be separated from one another. The use of *scrubbing* and *adsorption processes* at low temperatures leads to both high purities and high yields.

An overview of the basic physical processes which are used for the liquefaction of gases as well as the most important parts of the plants, equipment and machines is given in [198] and [199]. Properties of two- and multi-component mixtures with hydrogen, which are the basis for the calculation of the separation processes given in this chapter, can be seen in Figures 8, 9 and 10 (see Chap. 2).

Table 29. Boiling points at atmospheric pressure, triple point and critical data of hydrogen and some important components which can be present in raw hydrogen streams

Component	Boiling point at 101.3 kPa		Triple point data		Critical data	
	Temperature, K	°C	Temperature, K	Pressure, kPa	Temperature, K	Pressure, kPa
He	4.23	−268.9	2.17[b]	5.1	5.3	230
H_2[a]	20.4	−252.8	13.9	7.0	33.3	1 320
Ne	27.1	−246.1	24.6	43.3	44.5	2 760
Ar	87.3	−185.9	83.8	68.8	150.7	4 870
N_2	77.3	−195.9	63.2	12.6	126.1	3 390
O_2	90.2	−183.0	54.4	0.2	154.3	5 040
CO	81.6	−191.5	68.1	15.4	133.0	3 500
NO	121.2	−151.9	109.9	2.3	179.2	6 590
H_2O	373.2	100.0	273.2	0.6	647.4	22 140
H_2S	212.9	− 60.3	187.6	23.2	373.6	9 020
SO_2	263.2	− 10.0	197.8	1.7	430.4	7 870
CO_2	194.7[c]	− 78.5	216.6	18.0	304.2	7 390
NH_3	239.8	− 33.4	195.4	6.1	405.6	11 300
CH_4	111.7	−161.5	90.7	11.7	190.7	4 620
C_2H_6	184.6	− 88.6	89.9	<0.1	305.3	4 890
C_2H_4	169.5	−103.7	104.0	0.1	282.0	6 280
C_3H_8	231.1	− 42.1	85.4	<0.1	370.0	4 260
C_3H_6	225.5	− 47.7	88.0	<0.1	365.3	4 570

[a] In more detail in Section 2.1.
[b] Upper λ point.
[c] Sublimation

Such property data are available in computer data banks of engineering companies. Some data otherwise available is given in [200, 201].

5.1.1. Condensation Processes

Simple condensation processes are used, if the difference between the boiling point of hydrogen and the condensing phase, usually hydrocarbons, is sufficiently high. Hydrogen is frequently separated from refinery and dealkylation off-gases, as well as ammonia and methanol synthesis purge gases by the condensation process.

The gas from which hydrogen is to be recovered, usually contains components which are solid at the temperature of the final condensation step. Therefore, a *prepurification* stage is usually required to prevent blockage of heat exchangers, knock-out drums, and piping in the low-temperature section of the plant.

Prepurification and drying remove in particular impurities with a high boiling point such as water, carbon dioxide, and hydrocarbons such as benzene and toluene. These processes (often carried out in stages) are *scrubbing* (e.g., glycol scrubbing for water removal), *adsorption* (e.g., on activated carbon or molecular sieve beds), or *condensation* and *sublimation* of the impurities on reversible regenerator beds or reversing heat exchangers (Revex).

The residual gas mixtures, usually hydrogen – methane, hydrogen – carbon monoxide, or hydrogen – nitrogen mixtures, are cooled down below the condensation temperature. The lower the temperature chosen, the purer is the hydrogen product. In the case of the mixture hydrogen – methane the temperature in the condensator can be lowered below the solidification point of pure methane by the addition of ethane or propane and the hydrogen purity can thereby be increased.

The hydrogen yield depends on the solubility of the hydrogen in the condensate and on the amount of condensate. The yield of hydrogen increases, if the condensate is depressurized in a series of stages and the hydrogen-rich depressurization gas is recycled to the first stage of the compressor. Figure 63 shows the most important ways of generating refrigeration for low-temperature processes in industrial plants.

If amount and pressure of the impurities, such as methane, carbon monoxide or nitrogen, are large enough ($> 3 – 5$ vol %), the refrigeration requirements of the plant can be covered by *depressurizing the condensate* in a throttle (Joule – Thomson effect) (Fig. 63 A). Hydrogen is then recovered at high pressure. If the nitrogen or methane content is too low or variable, so that

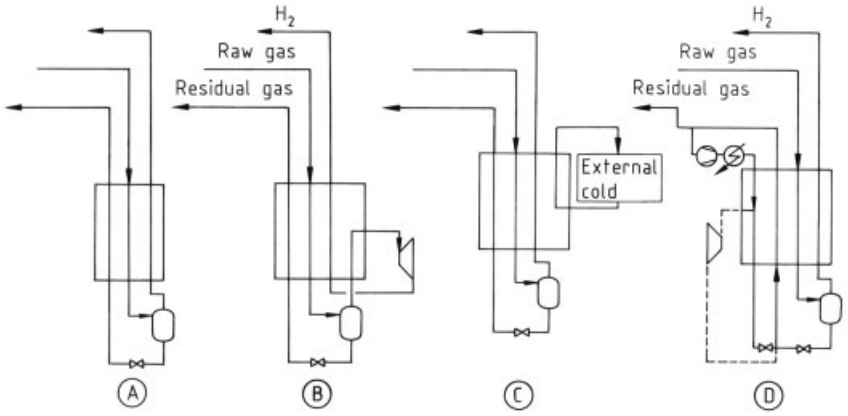

Figure 63. Principle ways of producing refrigeration for low-temperature hydrogen purification
A) Joule – Thomson expansion of residual gas; B) Hydrogen expansion in a turbine; C) Cold from external refrigeration sources (NH_3, freon, ethylene, etc.); D) Refrigeration cycle with residual gas

the refrigeration requirements cannot be covered reliably, then hydrogen itself can be expanded, e.g., by producing work in a turbine (Fig. 63 B).

If hydrogen, however, is required under high pressure, *external* refrigeration must be used. This can be done by a conventional external refrigeration plant using ammonia or freon as refrigerant (Fig. 63 C), or using other agents that are suitable for the required temperature level of condensation, in this case, e.g., nitrogen, carbon monoxide or methane (Fig. 63 D). The latter possibility requires the most sophisticated equipment. However, it leads to the greatest plant flexibility with regard to throughput and concentration of the impurities, because the refrigeration load is controlled directly by means of the external refrigeration cycle.

Some examples of processes using condensation alone are:

1) Refinery-gas purification plants, in which refrigeration is by a methane cycle or by decompressing the condensate (Fig. 63 A) with partial depressurization of the product [202].
2) Purification of the off-gas of the toluene dealkylation. Here a two-stage condensation is used for the recovery of pure hydrogen, a C_2, and a methane fraction. The refrigeration is supplied by an ammonia or freon cycle if necessary [203].
3) Recovery of hydrogen from the purge gas of ammonia plants. Here, a one-stage condensation process is sufficient. This process is particularly economic, when argon is recovered as an additional product by fractionation. A nitrogen cycle is used as refrigerant [204, 205].

Further common variations of the condensation process are as follows:

1) Staged decompression of the condensate and recycle of the decompressed gas to increase the hydrogen yield.
2) Partial condensation to fractionate the condensate and, eventually, to avoid the precipitation of solids. In this case the refrigeration can be supplied at a higher temperature, thus saving energy, by using refrigeration cycles which are optimized for the various condensation temperatures (see Fig. 63).

5.1.2. Condensation and Rectification

In large-scale plants higher yields and greater product purity are obtained by adding a rectification stage to the condensation step. This is also an advantage, if the impurities must be separated from one another. For the refrigeration many tailored variations exist.

Ethylene Plants. Pure hydrogen is recovered as a byproduct after low-temperature separation of ethane and ethylene from the methane – hydrogen fraction. The demethanizer plays an important part in the economics of the plant because the refrigeration required is at the lowest temperature of the process (→ Ethylene, Chap. 5.3.2.2.0.7).

Coal Liquefaction. Hydrogen is recovered from the off-gas of the Fischer – Tropsch synthesis (operated on a large scale in South Africa by SASOL) by means of low-temperature condensation and rectification processes.

Figure 64 shows the LT separation of the purification unit of the SASOL II plant. In this unit 8675 mol/s (700 000 m^3 [STP]/h) crude gas is separated into 7 fractions, 5 of them in a LT plant. The hydrogen fraction is ca. 3700 mol/s (300 000 m^3 [STP]/h) of 80 % pure H_2 [206]. The crude gas, freed from carbon dioxide, is cooled down close to the hydrate point (i.e., the temperature at which precipitation of solid gas hydrates occurs) [207]. The water condensate is removed and separated into a water and a C_{3+} fraction. The gas phase is dried in an adsorber and cooled down to −35 °C. The condensate produced in this stage is fed to the rectification column g and separated into a C_2 and a C_{3+} fraction. In the following condensation stage a C_2 fraction is recovered by cooling down to ca. −95 °C, in the final stage at −150 °C liquid methane is produced. Methane, the C_2 fraction and the C_3 product are separated in two columns. The gaseous phase in the final knock-out drum e_5, is ca. 80 % pure hydrogen.

This purity is suitable for the Fischer – Tropsch synthesis for which the main portion of the hydrogen-rich gas is required. A smaller part of the gas is used for hydrogenation purposes and is purified to 99.5 % using a pressure-swing adsorption process (see Section 5.2.3).

The refrigeration for the LT plant is supplied by an ethylene-propylene cascade and a methane cycle (see Figs. 63 C and 64, compressor d). The refrigeration must compensate for losses to the surroundings, in the heat exchanger and in the liquid product.

The refrigeration is supplied in 7 stages (including methane cycle) between + 9 °C and − 150 °C. The ethylene-propylene cycle has a power requirement of ca. 23 MW.

Low-temperature processes have been proposed for purification of the flash gas which is recovered on the decompression of the coal oil in plants for coal liquefaction by means of hydrogenation. Compared to other alternatives such as scrubbing at low temperature or diffusion separators [208], this concept has shown to be superior with regard to yield, energy requirements, economics and feasibility.

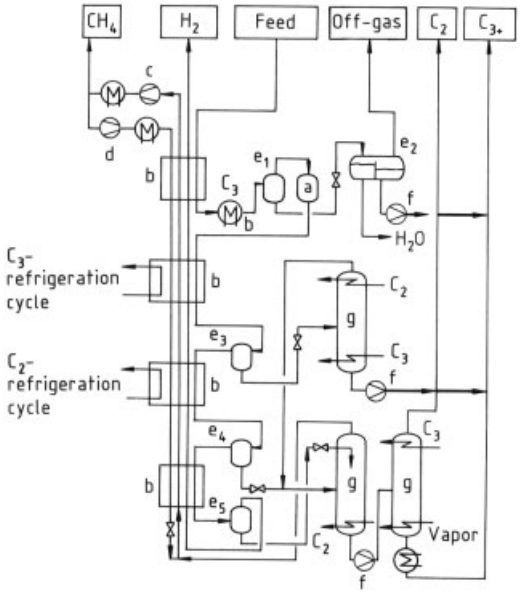

Figure 64. Production of H_2 and hydrocarbon fractions from Fischer – Tropsch synthesis off-gas by staged condensation. Separation of the hydrocarbon fractions by low-temperature rectification [206]
a) Adsorber for drying and elimination of traces of long-chain hydrocarbons; b) Heat exchanger; c) Compressor; d) CH_4 recycle compressor; $e_1 - e_5$) Knock-out drums; f) Pump; g) Column

Hydrogen – Carbon Monoxide Recovery. Figure 65 shows a low-temperature process, which simultaneously delivers hydrogen and carbon monoxide of high purity from converted gases and gases from partial oxidation. After leaving a carbon dioxide scrubber, the converted and non-converted crude gas is (1) freed from traces of carbon dioxide and water in an adsorber, (2) cooled in two heat exchangers and in the sump of the carbon monoxide column down to the condensation temperature of carbon monoxide, i.e., ca. 80 K.

Energy and refrigeration is produced by expanding hydrogen in a turbine, thereby expanding down to the inlet pressure of a PSA plant in which hydrogen of 99.9 % end purity can be recovered. The carbon monoxide content in the hydrogen is <0.5 ppm. Liquid carbon monoxide is decompressed stagewise, whereby the major part of the refrigeration requirements of the plant is covered. After warming, the carbon monoxide is fed into a rectification column and purified

to about 99 %, the maximum hydrogen impurity thereby being 0.5 %. A plant corresponding to Fig. 65 for a gas throughput of 833 mol/s (67 250 m^3 [STP]/h) synthesis gas has been constructed in two trains. The purge gas of the PSA plant can be recycled to obtain a higher yield of hydrogen and carbon monoxide [209].

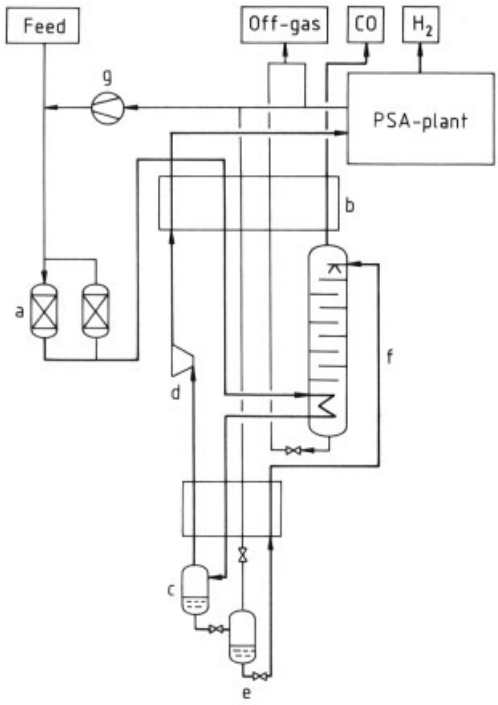

Figure 65. H_2 production from synthesis gas by low-temperature condensation and pressure-swing adsorption and production of pure carbon monoxide by rectification (German Linde)
a) Preadsorber; b) Heat exchanger; c) Condensation of CO and CH_4; d) Expansion turbine; e) Joule – Thomson expansion for H_2 recycle; f) CO/CH_4 rectification; g) Compression of expanded gas and PSA gas

Hydrogen – Nitrogen Rectification. Whereas in low-temperature hydrogen purification processes the rectification is employed principally to purify the byproducts, large-scale industrial processes also exist in which hydrogen itself is directly involved in the rectification. In the Braun purifier (part of an Ammonia synthesis process, using steam reforming of light hydrocarbons) (→ Ammonia) [210] ammonia synthesis gas is produced by condensing excess nitrogen from the raw gas which contains hydrogen, carbon monoxide, methane and nitrogen. Figure 66 shows the rectification of the hydrogen-nitrogen mixture. The refrigeration is provided by the decompression under production of energy in turbine (b) and by the Joule – Thomson decompression of the remaining gas in a throttle. A similar process for the production of ammonia synthesis gas from nitrogen rich blast-furnace gas or pit gases has been described [211].

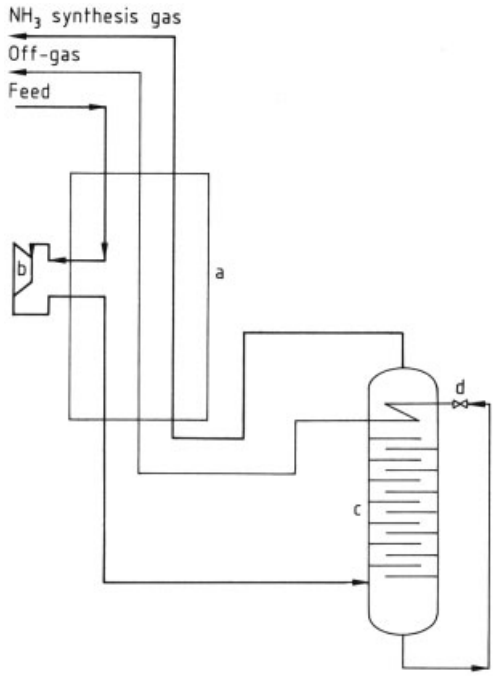

Figure 66. Rectification of an H_2/N_2 mixture and production of NH_3 synthesis gas (molar ratio $H_2 : N_2 = 3 : 1$) in the Braun purifier [210]
a) Heat exchanger; b) Expansion turbine; c) Rectification column; d) Joule – Thomson expansion

Ammonia Purge Gas Separation. A low temperature process for ammonia plant purge gas purification features especially high yields in ammonia recovery and in recovery of hydrogen as a product and for recycle. The application of this process is especially advantageous if the low temperatures occurring in the initial condensation step are utilized in further stages to recover other valuable components such as noble gases and methane [212, 213]. Figure 67 shows the integration of the low-temperature process into the ammonia plant. Several plants have been built for the recovery of liquid argon. If only hydro-

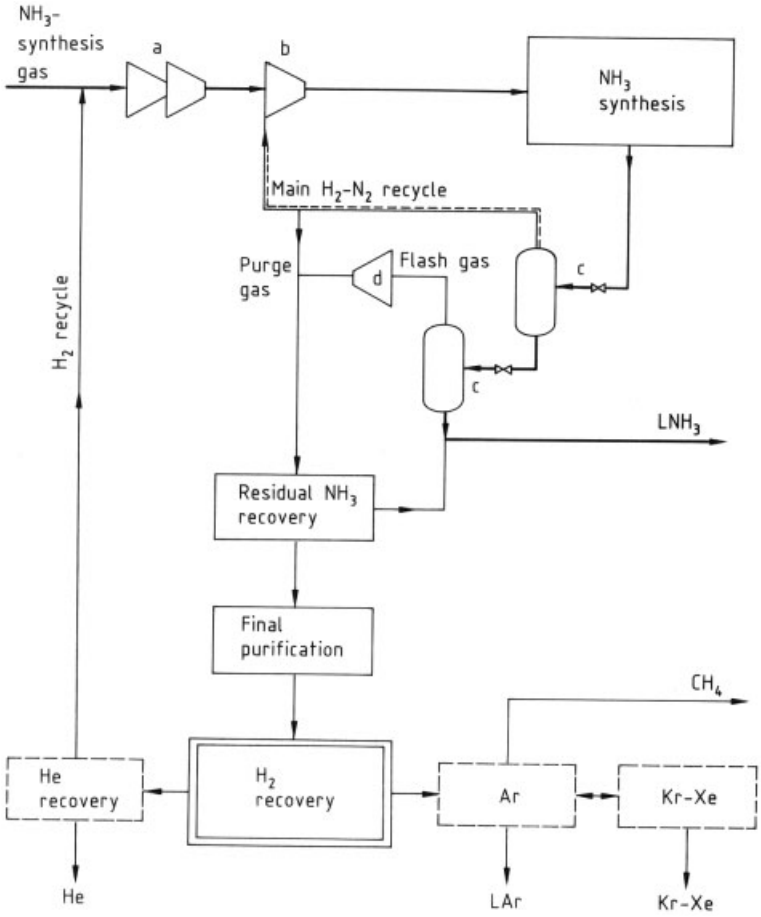

Figure 67. Integration of the low-temperature process into an ammonia plant [215]
a) Compressor; b) Recycle compressor; c) NH_3 condensate separator; d) Expansion turbine

gen is to be recycled, adsorption is a competing process (see Section 5.2). Combinations of both processes have also been proposed [209, 214].

5.1.3. Low-Temperature Absorption Processes

Absorption processes can yield greater purities than the condensation processes. Absorption processes are operated at higher temperature and thus with lower refrigeration requirements. The low-temperature processes described in this section are physical absorption processes, in which the impurities are condensed and either completely or partially utilized as scrubbing agent (for absorption processes with other scrubbing agents see Section 5.4).

Nitrogen Wash. A high-purity hydrogen – nitrogen mixture for ammonia synthesis is obtained by using a liquid nitrogen scrubber (→ Ammonia) [216]. This scrubber can not only reduce the catalyst poison carbon monoxide down to a few ppm but the inert gases such as methane and argon can also be removed. The methanation step can thus be avoided.

For modern ammonia processes, in which the synthesis gas is produced at high pressure, the nitrogen scrubber is particularly interesting (see Section 4.1.2) At low temperatures around 80 K the system hydrogen – nitrogen is still in the subcritical range, although pure nitrogen under these conditions is already supercritical. The necessary refrigeration for the nitrogen scrubber is produced by decompression of the nitrogen into the hydrogen stream.

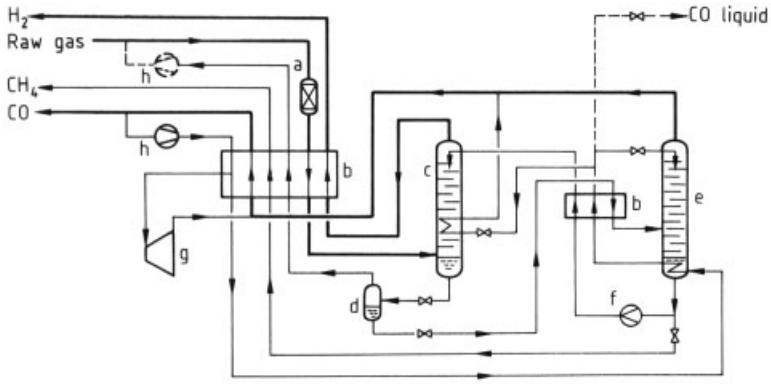

Figure 68. Plant for the recovery of hydrogen and carbon monoxide from H_2/CO-rich gases using a CH_4 scrubbing process
a) Adsorber for removal of H_2O and CO_2; b) Heat exchanger; c) Scrubbing column for CO with subcooled liquid methane; d) Knock-out drum; e) Separation of loaded wash methane to liquid lean methane (bottom) and pure carbon monoxide (top); f) Pump; g) Expansion turbine; h) Compressor

Methane Scrubber. For the recovery of pure hydrogen from hydrogen – carbon monoxide mixtures (e.g., from synthesis gas) the use of a methane scrubber is frequently an alternative to the condensation of carbon monoxide. Methane scrubbers attain much higher hydrogen purities, especially with regard to the carbon monoxide content, than would be possible with the carbon monoxide condensation process. Simultaneously, pure carbon monoxide can be produced. Figure 68 shows the most important process stages of a methane scrubber [217].

Crude gas between 1.5 and 4.5 MPa is dried in adsorber (a) and cooled down to ca. 90 K in a heat exchanger (b). The carbon monoxide remaining in the gas phase after condensation is removed down to a few ppm in the scrubber (c) with subcooled liquid methane. The liquid phase from the knock-out drum (d) and from the column bottom after decompression and partial evaporation is fed into the carbon monoxide – methane separation column (e). Here the sump product is pure methane, which is used for scrubbing, whereas a carbon monoxide fraction is obtained as the head product. A carbon monoxide cycle provides the heating and the reflux for the separation column as well as the cooling for the scrubbing column. By decompressing a fraction of the carbon monoxide cycle and generating energy the refrigeration for the heat exchanger is obtained.

In a similar fashion, however without a carbon monoxide – methane separation column, methane scrubbers are used for the purification of refinery off-gas or for the production of pure hydrogen from the purge gas of hydrogenation plants (coal hydrogenation, heavy oil hydrogenation). Similarly, as shown in Figure 68, methane scrubbers combined with adsorption processes can be used for the recovery of pure hydrogen, oxo-synthesis gas and a methane-rich heating gas fraction [213].

Other Scrubbing Agents. Absorption processes at low temperatures are not confined to the aforementioned scrubbing agents. Higher hydrocarbons such as ethylene or propane have also been used. Hydrogen itself can also be used as a scrubbing agent if the product desired is helium. Processes of this kind have been proposed and plants built for the recovery of helium and neon from air separation units and from ammonia purge gas streams [218]. In both cases the noble gases are already preconcentrated by several orders of magnitude compared to their natural abundance.

5.2. Adsorption Processes

5.2.1. Principles

Because of the only slight interaction of hydrogen with the usual adsorbing agents in technically important pressure and temperature ranges, adsorption processes are particularly suitable not only for the separation of hydrogen from

other gases but also for the separation of impurity traces from hydrogen. For the principles of adsorption see → Adsorption [219 – 221].

The adsorbents for hydrogen purification are chosen according to the impurities to be removed. The most common adsorbents are given in Table 30. The gas mixtures are separated by various effects. *Steric effects* prevail if the adsorbent has a uniform and narrow micropore distribution, as is found particularly with the zeolites. *Equilibrium effects* result from different adsorption forces of the gases on the solids, and *kinetic effects* are caused by the different diffusion mobilities of the gases into the pores of the adsorbing agents.

Table 30. Adsorbents for the purification of raw hydrogen

Type	Main adsorption duty
Aluminum oxides	water
Silica gel	water, CO_2, C_{4+}
Activated carbon	CO_2, CH_4, C_{2+}, N_2
Molecular sieve (zeolite)	CH_4, CO, N_2
Carbon molecular sieve	O_2

Although each of these effects is present to a various degree in the adsorbent-gas combinations given in Table 30, the strength of the adsorption forces of the various impurities in the raw hydrogen mixtures can be used to put them in the order shown in Table 31. The sequence shown there may change slightly depending on adsorption agent, partial pressure of the impurity and total gas pressure of the system.

The static equilibrium loading capacity of the adsorbent for a particular component is depicted in the form of an *adsorption isotherm* (loading capacity depending on partial pressure at constant temperature). Adsorption isotherms have typical values for the adsorbents and the components in question and must be determined experimentally. For a number of typical components and some adsorbents these values have been compiled in handbooks and in specification sheets of the various producers.

Figure 69 shows the principal adsorption isotherms of various gases present during hydrogen purification on carbon molecular sieve (active charcoal obtained from coal). There is a characteristic affinity between each particular gas and the solid.

Table 31. Adsorption forces for various components in hydrogen purification

Component	Adsorption forces
Hydrogen	weak
Helium	
Oxygen	
Argon	
Nitrogen	
Carbon monoxide	
Methane	
Carbon dioxide	
Ethane	
Ethylene	
Propane	
Isobutane	
Propylene	
Hydrogen sulfide	
Mercaptans	
Benzene	
Toluene	
Ethylbenzene	
Styrene	
Water	strong

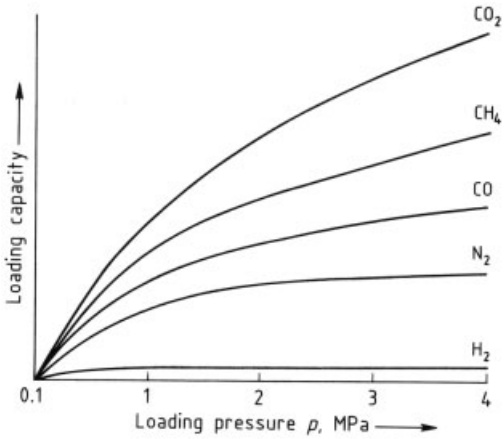

Figure 69. Principle form of equilibrium isotherms of mixtures of hydrogen with nitrogen, carbon monoxide, and methane [222]
Adsorbent material: carbon molecular sieves (activated carbon obtained from coal)

Adsorption is an exothermic process. Desorption, subsequently, is endothermic. In *thermally regenerated adsorbers* the energy necessary for the desorption is obtained by indirect heating of the bed or by using hot purge gas. In *pressure-swing adsorption* the desorption energy is obtained from the energy stored in the adsorption bed (thereby causing a temperature drop) if the pressure or the partial pressure of the components to be desorbed is decreased.

Hydrogen purification takes place in adsorption vessels with fixed beds of adsorbents. Other types, such as trickle beds, adsorption columns with solid circulation, moving beds, or adsorption in ebullating beds, are not used for hydrogen purification on a technical scale.

5.2.2. Thermally Regenerated Adsorbers

Thermally regenerated adsorbers are used to remove traces of impurities from hydrogen streams or for selective removal of certain substances which disturb ensuing process steps. The process is often designated as temperature-swing adsorption (TSA).

The adsorbers are usually switched alternately. While one adsorber is in the adsorption stage, the other is regenerated or is held in readiness. Switching usually takes place in a defined sequence, whereby the time for the adsorption step must be chosen shorter than the time calculated for the breakthrough of the impurities. Typical cycle times for these processes are in the range of some hours up to several days.

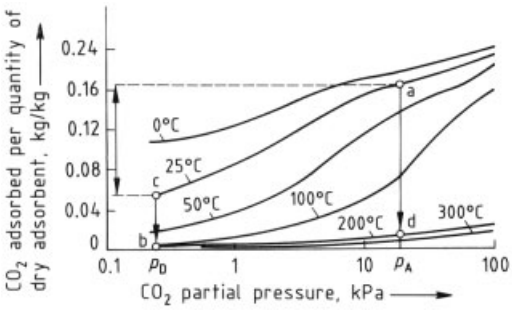

Figure 70. Adsorption and regeneration of CO_2 and molecular sieve 5 A, pellets
a) Adsorption loading; b) Desorption loading after decomposition and heating up; c) Theoretical desorption loading after decompression; d) Desorption loading after heating up without decompression
p_A = adsorption pressure; p_D = desorption pressure

The process is illustrated in Figures 70 and 71 for the adsorption of carbon dioxide in a hydrogen-rich synthesis gas on a molecular sieve (5 A). As shown in Figure 71, the adsorber becomes loaded to give a local concentration distribution which is indicated by curve a. The maximum adsorbed amount of carbon dioxide in the zone of the equilibrium concentration EZ is given by the equilibrium isotherm for 25 °C at point a in Figure 70.

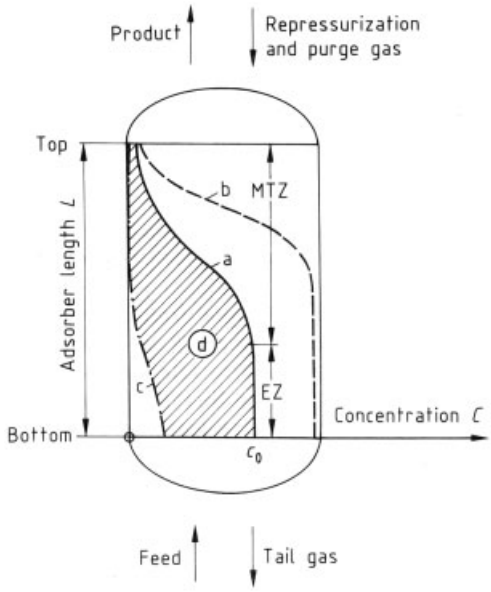

Figure 71. Concentration profiles in an adsorber (MTZ = mass transfer zone; EZ = equilibrium loading zone)
a) End of adsorption; b) End of cocurrent expansion; c) End of regeneration (residual loading); d) Useful cyclic capacity

In most cases regeneration is initiated by depressurizing. This procedure causes a desorption along the 25 °C isotherm to point c. However, because the depressurization is not isothermal, a cooling effect occurs, so that besides the kinetics of the desorption the adsorption conditions at the lower resulting temperature must also be considered. For a so-called cocurrent depressurization the distribution of the concentration in the adsorber is given by curve b of Fig. 71. The equilibrium along the isotherm is attained very slowly. The desorption energy requirements caused by the depressurization lead to a strong cooling of the adsorbent, which in the presence of water vapor can lead to formation of a liquid phase and thus to an irreversible damage of the adsorbent.

The main desorption takes place after the pressure has been lowered (point c in Fig. 70) mainly by increasing the temperature, in this case to 200 °C (point b or, if no previous depressurization took place, point d). The required heat is provided either indirectly by means of inserted heat exchanger coils or by direct heating

with a purge gas at higher temperature. After regeneration, the adsorber is cooled to normal operating temperature and pressurized back to normal adsorption pressure.

Applications. Before low-temperature purification and separation can be carried out (see Section 5.1), gas components, which would at low temperatures form solid deposits in the heat exchangers and knock-out drums, must be removed. In synthesis gases from partial oxidation and steam reforming these are in particular water and carbon dioxide, whereas in refinery gases these are usually higher hydrocarbons. In dealkylation and coke oven gases benzene, toluene, and other aromatics must be removed, whereas in sulfur-containing raw gases hydrogen sulfide and carbonyl sulfide are the disturbing components.

If these impurities are present in higher concentrations, the major portion may first be removed by condensation (water and hydrocarbons) and/or scrubbing (CO_2, H_2S and COS). Final purification is then by TSA. A process description of the removal of water and carbon dioxide from a water-rich synthesis gas by TSA is given elsewhere (→ Gas Production, Chap. 5.5.2).

Further applications for TSA in hydrogen purification processes are:

1) Removal of water and ammonia from ammonia purge gases before low-temperature separation.
2) Purification of hydrogen from electrolysis plants. The main impurities are water and oxygen. The latter is converted by means of catalytic oxidation (see Section 5.3) to water and then removed by condensation and TSA. Hydrogen from the chlor-alkali electrolysis contains also traces of mercury. This can be removed by TSA on a special molecular sieve [223].
3) Removal of various impurities from pure hydrogen before liquefaction. Here the adsorption is carried out at liquid nitrogen temperature. The regeneration is done with pure hydrogen from the recycle gas at ambient temperature (see Chap. 6).

5.2.3. Pressure-Swing Adsorption (PSA)

Adsorption Mechanisms. Contrary to adsorption with thermal regeneration, pressure-swing adsorption operates at almost constant temperature using partial-pressure differences. However, the small temperature gradients occurring with ad- and desorption contribute considerably to the mechanism of the process. The components to be removed are adsorbed at high system pressure and high partial pressure and are desorbed at low system pressure in accordance with the appropriate equilibrium isotherms of the various impurities (see Fig. 69).

Figure 72 shows, for the example of a hydrogen – carbon monoxide mixture, how carbon monoxide, which is easily adsorbed, reaches the equilibrium loading, a, on the molecular sieve, while pure hydrogen exits the adsorber. When the adsorber capacity is exhausted, the adsorbent must be regenerated. The carbon monoxide loading on the absorbent is reduced by depressurization and hydrogen purging. The difference c is the *available working capacity* of the adsorbent. However, as in the case of TSA, the *actual working capacity* of the total adsorbent is influenced by the presence of mass transfer zones (MTZ) (see Fig. 71). The length of a MTZ is basically determined by (1) the concentration of the component to be removed in the raw gas, (2) by the required product purity, and (3) by kinetic effects.

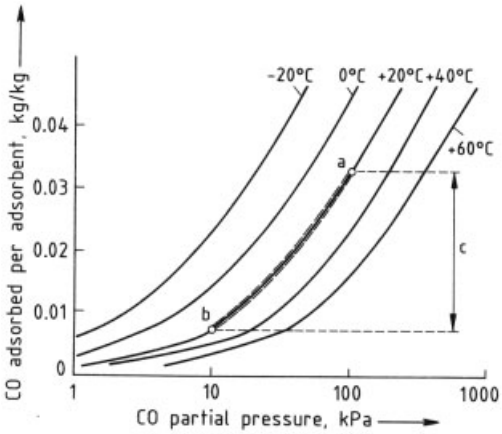

Figure 72. Adsorption isotherms for CO on molecular sieve
a) Adsorption; b) Desorption; c) Adsorption capacity

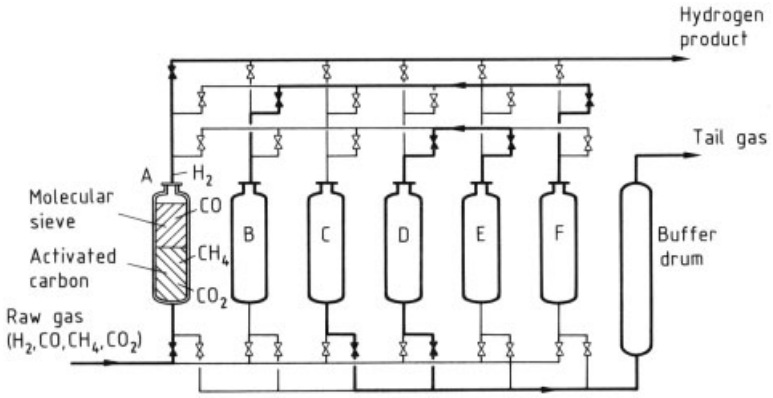

Figure 73. Six-bed PSA unit. Main flows for adsorption, repressurization, counterflow expansion (dump), counterflow purge, etc. for H_2 production by adsorber A. After termination of this adsorption step, next on-stream adsorber is B, etc.

Adsorber	A	B	C	D	E	F
Function	Adsorption	Repressurization	Dump	Purge	Depressurization	Depressurization
Start pressure, (MPa)	2.8	1.6	0.4	0.2	0.8	2.8
Final pressure, (MPa)	2.8	2.2	0.2	0.2	0.4	2.2

The PSA Process. Like the TSA process, the PSA process is cyclic, however, contrary to temperature swings, pressure changes can be carried out more rapidly and allow a shorter adsorption time. Typical cycle times are in the range of 3 to 10 min. Thus, removal of impurities present in high concentrations can be accomplished using moderately sized adsorber vessels. The essential steps carried out in a PSA unit are shown in Figure 73 [224]. Each adsorber is performing a different task, depending on which phase of the complete PSA cycle is regarded. The chronological sequence of all steps constitutes the cycle of one adsorber:

1) Adsorption at the pressure of the raw gas (highest system pressure), hydrogen production (adsorber A);
2) Cocurrent depressurization, provision of gas for pressure equalization and purging (adsorbers F and E);
3) Countercurrent depressurization, production of part of the tail gas (adsorber C);
4) Countercurrent purging (lowest system pressure), production of another part of the tail gas (adsorber D);
5) Countercurrent repressurization (adsorber B).

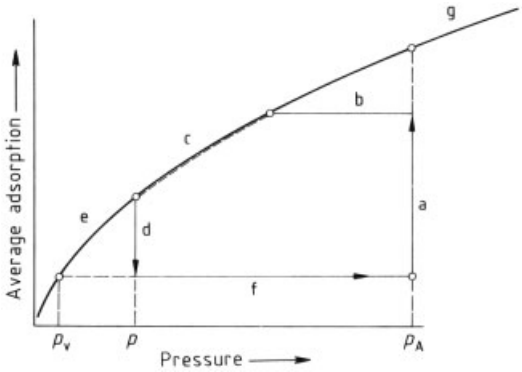

Figure 74. Theoretical pattern of the status of PSA adsorbers in respect to loading during one adsorption cycle [225]
a) Adsorption; b) Cocurrent depressurization; c) Countercurrent depressurization; d) Purge; e) Depressurization to vacuum; f) Repressurization; g) Equilibrium adsorption isothermal
p_A = adsorption pressure, p = purge gas pressure; p_v = final vacuum obtained

Figure 74 [225] shows the different process stages with respect to the equilibrium loading on the adsorbent. The possibility of continuing the decompression stage into vacuum is also shown. This latter mode of operation is indicated for the enrichment and recovery of the adsorbed component. However, production of concentrated

byproducts during the production of pure hydrogen is usually carried out by low-temperature processes and not by the adsorption process.

The mode of operation of a PSA can be summarized as follows:

1) Pure hydrogen is produced continuously at adsorption pressure.
2) Tail gas is produced continuously, the pressure, composition, and amount of which fluctuate periodically. These fluctuations are smoothed out by buffer vessels.
3) The efficiency of a PSA is defined by the amount of pure hydrogen produced in relation to the total hydrogen amount present in the crude gas. Depending on the crude gas composition and the degree of technical sophistication utilized, the PSA efficiency ranges between 70 and 90 %.

Technical PSA Plants. The simplest PSA system requires three adsorbers to enable continuous operation. Hydrogen yields of $> 80\,\%$ can only be attained in systems with more than 4 adsorbers.

Since the size of the adsorber is usually limited because of manufacturing or transport considerations, larger quantities of crude gas can only be treated if several adsorbers are used in the adsorption phase simultaneously (multibed process) [226, 227]. With such schemes PSA plants using 3 to 12 adsorbers can process amounts of crude gas ranging from 100 to more than 100 000 m^3 (STP)/h.

The maximum attainable hydrogen yield is influenced by a number of factors, the most important are:

1) *Composition of the crude gas.*
   For the economical operation of a plant the hydrogen content of the crude gas should be at least 50 %. The maximum hydrogen content is 95 – 99 %. Depending on the total amount of gas, TSA plants may be more suitable for such high-purity raw gases.
   The concentration and nature of impurities with respect to their ad- and desorption behavior determines basically the size of the adsorber which in turn results in higher or lower loss of hydrogen.
2) *Pressure ratio feed gas: purge gas.*
   This influences the size of the adsorber and the extent of the effort necessary for regeneration. At high pressure ratios the yields can be increased by using several pressure equalization steps (plants with more than 4 adsorbers).
3) *Purity requirements and nature of impurities.*
   The hydrogen purity in the PSA plants is usually $>99.9\,\%$. Higher purities with respect to those compounds which are poorly adsorbed, such as the inert gases nitrogen, argon, etc., are attainable at the expense of the yield. In spite of this, purities of 99.9999 %, i.e., hydrogen with <1 ppm impurities, can be realized on an industrial scale.
4) *Temperature of the feed gas.*
   High temperatures ($>40\,^\circ$C) result in a lower capacity of the plant, or in a poorer yield. Lower temperatures are therefore favored. Care must be taken, however, to avoid condensation of certain impurities in the regeneration step. For example, liquid or freezing water can damage the adsorbent.

Important developments in the design of large PSA plants were first possible after the introduction of microprocessor control systems. The main problems facing the control system are caused by the speed and the precision required by the short-time cycles. For this reason, modern plants are controlled by microprocessors using a 1-s sequence achieving "real time" control. Beyond this, it is now possible, not only to control the sequence and valves, but also to have a real process control system. This allows a high degree of flexibility for the changing of various process parameters and the indication of disturbances. In particular, the automatic initiation of disturbance strategies in the case of process, pressure and valve failures, e.g., shutdown of an upset adsorber without interrupting hydrogen production, is possible. Very high requirements are placed on the vessels and valves with up to 50 000 cycles (i.e., valve closures) per year. The operational practice has shown, however, that these plants are very reliable, so that they have become standard.

In the past years purification of hydrogen by means of PSA has increased more than any other gas purification process. Figure 75 gives an impression of the breakthrough of this new technology. As can be seen from the number of plants corresponding to the plant capacity, not only the number of plants per year put on stream has in-

creased, but also the amount of hydrogen purified per plant. Plants $> 100\,000\ m^3$ (STP)/h inlet gas are not uncommon nowadays.

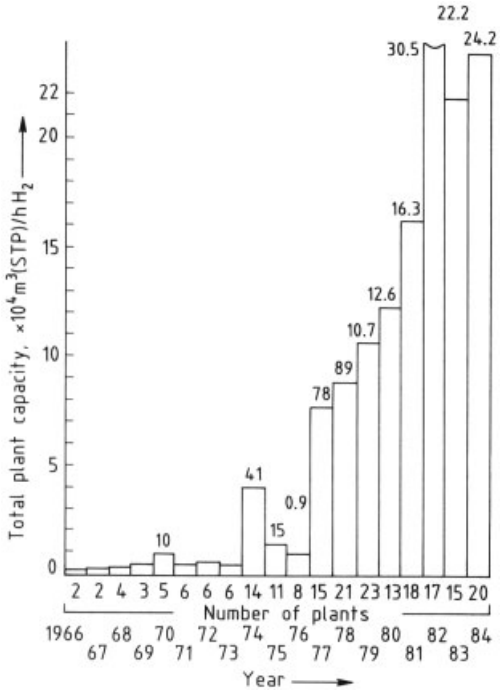

Figure 75. Worldwide capacity of H_2 gas purification plants with pressure-swing adsorption technology (put into operation from 1966 to 1984)

Applications [224].

Gas Purification in Steam-Reforming Plants (see Section 4.1.3). Other gas purification processes have been more or less completely replaced in this area [228]. For the production of hydrogen and carbon monoxide by steam reforming, PSA in combination with a low-temperature plant can also be economically used. The amount of gas handled by the plants built ranges from 500 – 87 000 m^3 (STP)/h of product gas. These plants use the tail gas produced to fire the reformer. Specially designed control loops and buffer systems lead to a very homogeneous tail-gas flow which is discharged with only small fluctuation in composition and flow, so that a reliable operation of the burners is possible.

Refinery Gases (see Section 4.1.4). Because of the increasing demand for hydrogen for hydrogenation in refineries the PSA process is used there for hydrogen recovery and production. Refinery gases have a hydrogen content of 60 – 80 % the remainder being higher boiling hydrocarbons ($C_6 - C_{10}$). These are adsorbed well, but are difficult to desorb which can cause damage to the adsorbent. By choice of suitable adsorbents these difficulties can be avoided. Plants with feed gas capacities up to 100 000 m^3 (STP)/h have already been built. Figure 76 shows the hydrogen purification section in a large refinery in Kuwait.

Coke Oven Gas (see Section 4.1.1). Coke oven gas purification places the highest demands on the adsorption technology because of the inlet gas composition. Special preadsorbers have been used to remove impurities such as tar, naphthalene and higher sulfur compounds, which have a poor desorption capacity.

Hydrogen-Rich Gases from Various Synthesis Processes. Apart from numerous small plants which operate for example with ammonia or methanol plant purge gas, the coal gasification at SASOL is to be mentioned. 160 000 m^3 (STP)/h of off-gas from the coal gasification, respectively the Fischer – Tropsch synthesis is purified in five PSA plants.

5.3. Catalytic Gas Purification

Four distinct cases for the use of catalytic processes for gas purification can be distinguished:

1) A component of the crude gas is to be catalytically converted to hydrogen, i.e., a secondary hydrogen production process.
2) Impurities in the crude hydrogen are to be catalytically converted into a form which allows them to be more easily removed from the gas by other purification processes (condensation, adsorption).
3) Gas components, which even in traces could be detrimental to the use of the hydrogen, are converted into harmless components with only minor changes in the gas purity.
4) Adsorption processes, in which certain impurities are chemically bound to the adsorbent so strongly that a regeneration during normal operation does not take place.



Figure 76. Production of hydrogen from refinery off-gas. Plant with 12 adsorbers and 2 buffer drums (in the center) for flow and composition equalization
Plant capacity: 100 000 m^3 (STP)/h refinery gas; H_2 content: 80 %; product purity: >99 %; recovery rate: 89.5 %. Erected by German Linde in Kuwait in 1986

5.3.1. Carbon Monoxide Removal

Hydrogen from synthesis gas may contain up to 50 % carbon monoxide (partial oxidation). Carbon monoxide can be recovered for CO production by a methane scrubber (see Section 5.1.3) and used for synthesis, or it can be reacted with water to produce hydrogen and carbon dioxide (water – gas reaction, shift conversion):

$$CO + H_2O \rightarrow H_2 + CO_2$$

The reaction is exothermal. Because of the equilibrium conditions the carbon monoxide conversion is incomplete in adiabatic reactors. For increased carbon monoxide conversion a greater amount of water ($c_{H2O}/c_{CO} > 3$) is necessary. At high carbon monoxide concentration a series of adiabatic reactors with intercooling is used. Isothermal reactors have also been suggested [229]. Depending on the type of catalyst used, three types of conversion may be identified.

Conversion of Sulfur-Containing Gas. Crude gas from partial oxidation or coal gasification, which contains at least 50 ppm hydrogen sulfide, can be converted on metals of group 6, 8, 9, or 10 of the periodic table (exceptions: Cr and Fe) or on mixtures of these metals. The carrier is aluminum oxide, sometimes alkaline compounds are present as a promoter. The metals are totally or partially sulfided, the sulfided form being the most active form. The usual catalysts contain cobalt, molybdenum, and nickel as active components. They can be used at 10 MPa and 250 – 550 °C.

An industrial process with these catalysts was described in Section 4.1.2. A detailed description of the kinetics of crude-gas conversion is found in [230], patents in [231].

High-Temperature Shift (HT Conversion). For essentially sulfur-free gases, e.g., the product gas of the steam reformer or the secondary reformer, the well-known carrier-free conversion catalysts on iron oxide – chromium oxide basis can be used, e.g., 74 % Fe_2O_3, 10 % Cr_2O_3, 0.2 % MgO (rest: volatile components). Sulfur up to several hundred ppm can be tolerated although the activity then drops; catalyst poisons are phosphorus, silicon and unsaturated hydrocarbons in the presence of NO_x.

The shift reaction runs almost to equilibrium at space velocities between 3000 and 10 000 m^3 (STP) h^{-1} m^{-3} and pressures up to 7 MPa. The reaction temperatures are in the range 300 – 530 °C [232].

In steam reforming plants usually only one HT conversion stage is installed. To decrease the carbon monoxide concentration further, low-

temperature conversion catalysts are used. If the purified synthesis gas in coal gasification plants is to be converted, a series of adiabatic reactors can be used. The last stage of this cascade usually consists of a low-temperature conversion.

Low-Temperature (LT) Conversion. The catalysts for LT conversion are supplied in their oxidized form, the major component of the unreduced catalyst is CuO, usually in a mixture with ZnO. Other components may be Cr_2O_3 and Fe_2O_3 (stabilizers) and Al_2O_3 (carrier) [230, 233]. The temperature range used is 190 – 260 °C; the lower temperature is limited by the dew point of the gas, the upper temperature because of the sensitivity of the copper catalyst to thermal deactivation.

These catalysts are extreme sensitive to sulfur, contents of 0.1 ppm leading to their deactivation, so that a suitably large reactor volume must be used to ensure that any slow deactivation of the catalyst will not cause any premature shut-down of the unit. Very often guard beds are placed before the actual catalyst [234]. For more details on the use of HT and LT shift conversion in steam reforming plants see Section 4.1.3 and → Gas Production.

The thermal stability of copper catalysts can be raised considerably if they are used in a silica-supported form. These supported catalysts are prepared by precipitation from a homogeneous solution and are found to be very active for the water – gas shift reaction [235]. The catalyst can be reduced at a temperature of 450 °C and can be operated between 275 and 400 °C with initial carbon monoxide concentrations up to 10 %. A $Fe_2O_3 - Cr_2O_3$ catalyst has been prepared in a similar way and also shows improved activity at lower temperature, at the same time the resistance to traces of sulfur and chlorine compounds [236] still being preserved.

Because of considerations of equilibrium, reaction temperature and efficiency of the catalyst, the shift reaction can remove carbon monoxide only down to a remaining concentration of ca. 0.2 – 0.5 vol % in the dry gas. For refinery gases, however, purities <0.1 %, for hydrogenation of fats and oils <10 ppm (mL/m^3) and for ammonia synthesis <1 ppm (mL/m^3) are required (see Chap. 8). For these and other purposes a further purification stage is necessary. In many cases this is the methanation step.

5.3.2. Methanation

Here, methanation is described as a process for the removal of traces of carbon monoxide or carbon dioxide. For the conversion of large carbon monoxide concentrations to yield substitute natural gas see → Gas Production, Chap. 5.3.4.

Especially for ammonia plants the carbon monoxide concentration in the gas must be decreased (see also Fig. 77). This is done by using the reaction

$$CO + 3\,H_2 \rightarrow CH_4 + H_2O$$

The methanation converts carbon monoxide, which is a poison for the ammonia synthesis catalyst, to the inert gas methane. However, losses in hydrogen content (3 mol H_2 per mole of converted carbon monoxide) must be accepted. The design of methanation reactions is described [237].

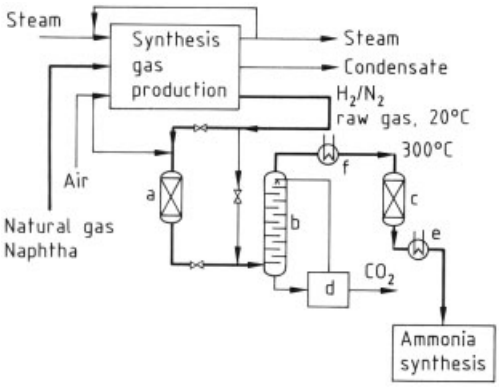

Figure 77. Removal of CO and CO_2 from ammonia synthesis gas ($3H_2 + N_2$) by selective oxidation (SELECTOXO), CO_2 scrubbing, and methanation
a) Selective oxidation; b) CO_2 scrubber; c) Methanation; d) Regeneration of the scrubbing agent; e) Gas cooling; f) Gas heating

Under typical methanation conditions (high hydrogen partial pressure, low methane and water content) the equilibrium is shifted far to the methane side, so the resulting carbon monoxide concentrations are usually below the detection limit. Nickel oxide, sometimes together with chromium oxide, is used as a catalyst. However, it must be reduced before the start-up. Aluminum oxide or diatomaceous earth is used as

carrier. The metallic content of the catalyst is very high (30 – 60 %) compared to the nickel catalyst used for steam reforming.

The following undesired side reactions may occur:

$$CO_2 + 4\,H_2 \rightarrow CH_4 + 2\,H_2O$$

$$2\,CO \rightarrow C + CO_2$$

$$Ni + 4\,CO \rightarrow Ni(CO)_4$$

5.3.3. Selective Oxidation

The disadvantage of hydrogen losses and increased inert content in the aforementioned methanation process can be avoided, if carbon monoxide is oxidized to carbon dioxide, because the latter can be readily removed from hydrogen. However, as a side reaction oxidation of hydrogen, which is present in much greater concentration, may occur:

$$2\,CO + O_2 \rightarrow 2\,CO_2$$

$$2\,H_2 + O_2 \rightarrow 2\,H_2O$$

In spite of this, selective oxidation of carbon monoxide can be achieved on a special noble metal catalyst [238 – 240]. The incorporation of this process stage into the synthesis gas production for ammonia is shown in Figure 77.

The selective oxidation is placed behind the last shift reactor after removal of excess water by condensation. Air, which is taken from the compressed air for the secondary reformer, is used as oxidizing agent. Oxidation takes place at 50 – 70 °C in an adiabatic bed reactor. The temperature increase resulting from the heat of reaction amounts to 10 K per 0.1 mol % carbon monoxide. The carbon monoxide content can be reduced to ca. 100 ppm (mL/m^3) by this method. If the gas is to be used for ammonia synthesis, an additional methanation stage must still be incorporated for final clean-up.

5.3.4. Catalytic Removal of Sulfur Compounds

Sulfur compounds are catalyst poisons for hydrogen production and the various syntheses using hydrogen. Desulfurization is achieved in two stages: (1) hydrogenation and (2) hydrogen sulfide removal. Depending on the feed gas, these stages may be carried out separately or simultaneously. In the first step, organic sulfur compounds and carbonyl sulfide are hydrogenated to hydrogen sulfide

$$RCH_2SH + H_2 \rightarrow H_2S + RCH_3$$

$$COS + H_2 \rightarrow H_2S + CO$$

a cobalt – molybdenum contact is normally used as hydrogenation catalyst. If the gas contains a great amount of carbon monoxide, e.g., coke oven gases, the cobalt – molybdenum catalyst must be sulfided in order to avoid methanation of carbon monoxide (see Section 5.3.2).

Hydrogenation of sulfur compounds is favored by high hydrogen partial pressure and temperatures around 350 °C. After the hydrogenation of the sulfur compounds, the hydrogen sulfide formed can be removed by chemical or physical scrubbing (see Section 5.4), if its concentration is > 1 %

For lower concentrations, hydrogen sulfide is absorbed on zinc oxide.

$$ZnO + H_2S \rightarrow ZnS + H_2O$$

Zinc oxide is available in the form of spheres, tablets or extrusions. The average sulfur pick-up until hydrogen sulfide breaks through the bed is ca. 25 % of the stoichiometric amount. The reaction temperatures are 100 – 350 °C (max. 400 °C). Organic sulfur compounds and carbonyl sulfide are partially cracked and absorbed in the zinc oxide bed, so that for natural gases with a low sulfur content the hydrogenation may not be necessary. The final purity after a zinc oxide bed is <1 ppm (mL/m^3) sulfur. The zinc oxide cannot be regenerated in situ but must be replaced.

Other materials used for desulfurization are, e.g., iron hydroxide (a byproduct of aluminum production), iron ore, and other purification agents containing iron oxide or iron hydroxide activated with alkaline compounds [241]. These absorption agents are mainly used for purification of coke oven gas before it is used as town gas. The achievable purity is <2 mg sulfur/m^3 (STP) (ca. 10 ppm [mL/m^3] S as H_2S). Iron- or copper-activated carbon can also be used. The regeneration of these agents with superheated steam is, however, only partially possible.

Chemisorption:

$$2\,Fe(OH)_3 + 3\,H_2S \rightarrow Fe_2S_3 + 6\,H_2O$$

Regeneration:

$$Fe_2S_3 + 3\,H_2O + 3/2\,O_2 \rightarrow 2\,Fe(OH)_3 + 3\,S$$

5.3.5. Removal of Oxygen

Hydrogen from coke oven gas and from an electrolysis (contrary to the hydrogen produced from other reducing processes) very often contains oxygen in concentrations up to 1 %. This oxygen is removed in *deoxo* reactors.

$$2\,H_2 + O_2 \rightarrow 2\,H_2O$$

Small levels of platinum and palladium on typical carriers such as α-Al_2O_3, active charcoal, or aluminosilicates provide highly active catalysts for the conversion (e.g., 0.3 % palladium on alumina). The catalyst is active even at ambient temperature, although usually higher temperatures are used.

Because of the strongly exothermic reaction a heat exchanger is installed after the deoxo reactor. The reaction product water is removed by adsorption. An example for the use of this process with prepurified coke oven gas is given in Figure 16.

Another method for oxygen removal is the use of catalytically active non-noble metals, usually copper or nickel, on carriers, e.g., silicon dioxide. These contacts operate at higher temperatures (300 °C) and are less sensitive to impurities such as hydrogen sulfide than are the noble metal catalysts. Both catalytic processes for oxygen removal are very selective, yielding purities of 1 ppm (mL/m^3) oxygen.

5.3.6. Removal of Nitrogen Oxides

In gases from coke ovens and coal gasification plants, in particular from entrained-bed gasifiers, traces of nitrogen oxides are present. These must be removed before gas separation in a cryogenic process is possible. Principally, nitrogen oxides can be removed from hydrogen streams by either oxidation or reduction. In the *reduction process* the nitrogen oxides are hydrogenated on sulfided cobalt – molybdenum catalysts, and water and nitrogen are produced. The reaction can be accelerated if small amounts of ammonia are present in the gas. Water and ammonia are removed in downstream scrubbers. The nitrogen produced can usually be neglected for the hydrogen purity.

Oxidative removal of NO takes place with ozone or, particularly selective, with ClO_2. The NO_2 produced is removed by use of scrubbers with alkaline-reducing agents (reduction to nitrogen). Final purities of ca. 0.01 ppm (mL/m^3) NO can be attained.

5.4. Scrubbing Processes

Scrubbing processes are used to purify large quantities of hydrogen. The compounds to be removed are absorbed in the scrubbing liquid. Since this can be done by utilizing either their different solubility in the scrubbing agent or by reaction with the scrubbing agent, the scrubbing processes are subdivided into physical and chemical processes.

5.4.1. Principles

For a detailed description of the physical and chemical principles of gas scrubbing see → Absorption and [242 – 244].

For selection, design and economics of a physical absorption process the most important factor is the solubility coefficient of a component given as λ (m^3 [STP] bar^{-1} t^{-1}) or λ' (kmol bar^{-1} t^{-1}) [200]. The capacity of an absorbent can be represented by the solubility curve as a function of pressure and temperature. These are shown in Figure 78 for carbon dioxide.

For physical absorption the capacity at first follows Henry's law (i.e., a linear relationship, curves a, f, g, h), while for chemical absorbents typically a curve, which approaches a saturation value (curves b, c, d, e) is found. Apart from solely physical or solely chemical scrubbing, combined process can be used. Here the scrubbing stages may be separate and operated in series (e.g., crude and fine scrubbing) or a mixture of a physical and a chemical scrubbing agent may be used.

Chemical scrubbing is only suitable for acid gas components such as CO_2, H_2S, COS, and

HCN. Physical scrubbing, on the other hand, can also be used for other components such as benzene, and higher hydrocarbons.

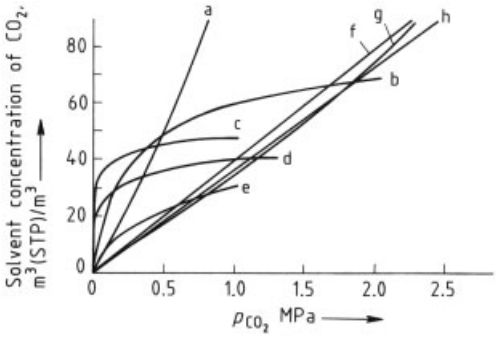

Figure 78. Absorption equilibria of carbon dioxide in various solvents [244]
a) Methanol, −15 °C; b) MDEA (methyl diethanolamine), 75 °C, 3.5 molar; c) MEA (monoethanolamine) 75 °C, 3 molar; d) Hot potassium carbonate, 110 °C; e) TEA (triethanolamine), 75 °C, 2.5 molar; f) NMP (*N*-methylpyrrolidone), 20 °C; g) Propylenecarbonate, 25 °C; h) Selexol (polyethyleneglycol dimethyl ethers)

The raw gases for hydrogen production, depending on their source, contain several impurities in various concentrations; apart from that, they are at various pressures. For the choice of the optimum scrubbing process, the following factors are important:

1) Type, amount and partial pressure of the component to be removed;
2) Type, amount and total pressure of the gas to be purified;
3) Required final purity, utilization or subsequent process steps for the product gas and the impurities removed;
4) Consumption figures

Physical scrubbing is preferred for large gas quantities at high pressure with high concentrations of impurities to be removed; *chemical scrubbing* is particularly suitable when the absolute amount of the component to be removed is small. It can be used both at atmospheric and at higher pressure. With chemical scrubbing it must also be certain that there is no component in the raw gas, that can react irreversibly with the scrubbing agent. Carbonyl sulfide, for example reacts with MEA (monoethanolamine) to form stable salts. Here the absorbent cannot be regenerated by heat alone, and this leads to a loss of scrubbing agent.

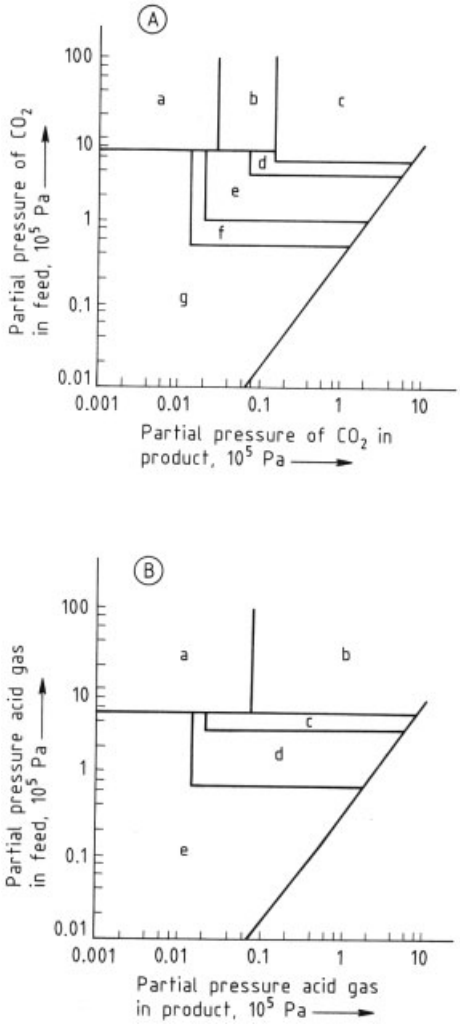

Figure 79. Examples for the selection of a suitable scrubbing process for CO_2 or CO_2 – H_2S removal with respect to partial pressures in feedgas and product gas, [245]
A) Selection of solvent for CO_2-removal, no H_2S; a) Physical solvent plus amine; b) Physical solvent, physical solvent plus amine or activated hot potassium carbonate; c) Physical solvents, d) Physical solvents or activated hot potassium carbonate; e) Activated hot potassium carbonate or concentrated amine; f) Activated hot potassium carbonate or amine; g) Amine
B) Selection of solvent for simultaneous removal of H_2S and CO_2; a) High loading amines (DEA), Selexol, Rectisol; b) Physical solvents; c) Physical solvents or diglycolamine; d) Activated hot potassium carbonate, Sulfinol, amines; e) Amines, Sulfinol

Figure 79 shows how the choice of a suitable scrubbing process can be made for certain limiting parameters (e.g., partial pressure of the substance to be removed in the inlet and the exit gas). An overview of the processes used at present to remove acidic components from gases (synthesis and natural gas), is given in [246].

The most important processes used for purification in hydrogen production are:

1) Carbon dioxide removal from converted steam reformer gases for the production of hydrogen or ammonia synthesis gas. Here the hot potash scrubbers and modifications thereof, often combined with an amine wash, are used (see → Absorption). In recent times activated MDEA (methyl diethanolamine) wash processes and certain mixed amine processes have been found to have some economic advantages, however, there still is a tendency to use physical scrubbing processes (Selexol, Sepasolv, etc.) for crude gas purification.
2) For the simultaneous and separate removal of carbon dioxide and hydrogen sulfide from converted or unconverted raw gas from partial oxidation of heavy oil or coal, the Rectisol process has been successful and is used almost exclusively for coal gasification plants.

5.4.2. Physical Scrubbing (Rectisol Process)

The Rectisol process (→ Gas Production) (jointly developed by Linde and Lurgi) is a physical scrubbing process with methanol as the preferred scrubbing agent. Newer variations use other organic solvents or solvent mixtures (e.g., Rectisol II, [248]). Since the absorption capability of organic solvents increases at lower temperatures and since, in addition, losses of scrubbing agent are smaller, Rectisol processes are usually operated at 200 – 260 K. The solubility of various gases in methanol is given in [200] and [248].

Depending on the process chosen, carbon dioxide and hydrogen sulfide can be recovered together or separately. Usually the simpler plants have a common scrubbing stage. Proper configuration of the main scrubbing and the purification section allows a very high attainable purity (20 – 50 ppm [mL/m^3] CO_2). For special purposes (e.g., methanol synthesis gas), a certain amount of CO_2 can be left in the gas and the fine scrubbing can be used only for the sulfur containing compounds. The disadvantage of the simple process is that a tail gas is obtained which, apart from carbon dioxide, also contains a certain amount of sulfur compounds and other traces (HCN, CO). Such a gas must, therefore, be treated by special processes.

For the production of a sulfur-free carbon dioxide fraction and a hydrogen sulfide fraction suitable for the Claus process, selective Rectisol scrubbing processes are used (→ Gas Production). Figure 80 shows a simplified process scheme with process description. Rectisol is very flexible with respect to the attainable purity of the product gas, the pressure range and any possible process variations. In addition, there are no corrosion problems. For ammonia synthesis gas the Rectisol process can be combined advantageously with a low-temperature liquid nitrogen wash (see Section 5.1). Other physical gas scrubbing processes are summarized in Table 32.

Table 32. Physical gas-scrubbing processes

Name	Solvent	Temperature, °C	Licensor
Fluor-Solvent	propylene carbonate	ambient	Fluor
Purisol	*N*-methyl pyrrolidone	ambient	Lurgi
Selexol	polyethyleneglycol dimethylether	0 – 40	Norton
Sepasolv	polyethyleneglycol diisopropylether	0 – 40	BASF

5.4.3. Chemical Scrubbing Processes

An example of chemical scrubbing in hydrogen production is the combination Benfield – DEA scrubber (so-called High-Pure Benfield). For the SASOL II and III plants carbon dioxide is removed from the recycle gas of the Fischer –Tropsch synthesis, which in total amounts to 7×10^5 m^3 (STP). After the ensuing low-temperature separation, a gas with 80 % hydrogen is obtained which is fed either to the Synthol synthesis or to a PSA plant. A process scheme is shown in Figure 81.

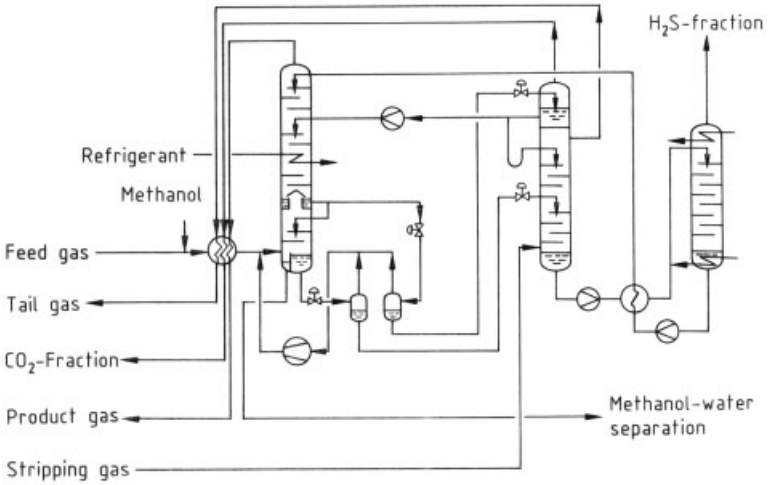

Figure 80. Selective Rectisol scrubbing process for production of a sulfur-free carbon dioxide fraction and a hydrogen sulfide fraction suitable as Claus plant feed [249]

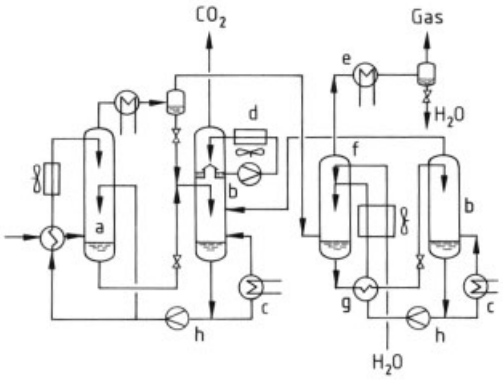

Figure 81. Flowsheet of a combined Benfield – DEA scrubber (High Pure Benfield) for CO_2 removal from Fischer – Tropsch synthesis recycle gas (SASOL II and III) [250]
a) Absorption column; b) Regeneration column; c) Steam generator; d) Air cooler; e) Water cooler; f) DEA scrubber; g) Heat exchanger; h) Pump

High-Pure Benfield Process. Both scrubbers contain an absorption and a regeneration tower, the latter operating at almost atmospheric pressure. The temperature ranges between 70 and 108 °C in (a) and between 50 and 60 °C in (f). The absorbents are regenerated by indirect heating with steam. The final cooling of the regenerated absorbents takes place in air coolers, the cooling of the purified gas in water coolers. The hot potash scrubber (first stage) lowers the carbon dioxide level below 0.8 vol %, the final DEA scrubber below 80 ppm (mL/m^3). The relatively small carbon dioxide amount from the DEA regeneration column (b_2) is fed to the hot potash regeneration column (b_1) and there, together with the main amount of carbon dioxide, vented into the atmosphere or recovered and used for other purposes.

Table 33 lists some other chemical scrubbers.

Oxidative scrubbing processes are sometimes used to remove hydrogen sulfide, e.g., for the purification of coke oven gas or other gases from hydrogen purification plants. Hydrogen sulfide is absorbed and oxidized in the scrubbing agent to form elemental sulfur (→ Gas Production). Such processes are:

Stretford process (British Gas Corp.)
Locat process (ARI)
Sulfolin process (Linde)

An overview of the literature on hydrogen sulfide removal from coke oven gas, low-Btu gas, rest gases and natural gas is given in [251], on newer oxidative scrubbing processes in [252]. The scrubbing processes described, however, are unable to remove the so-called "inert components" (noble gases, nitrogen, carbon monoxide, methane). In general, further purification steps on the basis of adsorption and catalysis (see Section 5.3) as well as low-temperature processes including cryogenic scrubbing with liquid methane (see Section 5.1) are necessary.

Table 33. Industrially important chemical scrubbing processes

Classification	Scrubbing agent	Additives	Trade name, licensor
Amine washes	MEA		
	MEA	not specified	Aminguard (UCC)
	DEA		
	HDEA		Linde
	MDEA		
	DGA		Fluor
	DIPA		Adip
	activated		Shell
	MDEA, *t*-amines	various various	BASF UCARSOL (UCC)
Physical – chemical washes	sulfolane, DIPA		Sulfinol (Shell)
	methanol, amine		Amisol (Lurgi)
Hot potash washes	$K_2CO_3 - H_2O$	vanadium, DEA	Benfield
		amineborate	Catacarb
		borax	Lurgi
		arsenate	Giammarco
Caustic scrubber	$NaOH - H_2O$	only used for fuel purification, no regeneration	

5.5. Permeation Processes

For purification of hydrogen and for separation of hydrogen from gas mixtures processes based on the principle of diffusion and permeation through membranes are also suitable. The physical fundamentals of diffusion processes are given in [253] together with a detailed description of diffusion separation methods in [254].

The driving force for gas transport through membranes is the partial pressure of the gases. The permeating flux Q_i (per unit area of surface and time) is given by Equation (57):

$$Q_i = \frac{P_i}{d} \cdot (p_{i2} - p_{i1}) \quad (5)$$

where P_i, the permeation coefficient, is the product of solubility and diffusion coefficients of a gas *i*, p_{i2} and p_{i1} are partial pressures on the high- and the low-pressure sides of the membrane and *d* is the membrane thickness.

To separate various components it is essential to have different permeation coefficients. The separation capability of the membrane is defined by the selectivity α; this is the ratio of the permeation coefficients of the two gases *i* and *j*

$$\alpha = P_i / P_j$$

The fact that the permeation coefficient of hydrogen is much higher than that of other gases is utilized to separate hydrogen by diffusion through metal or polymer membranes.

5.5.1. Metal Membrane Techniques

Hydrogen diffuses well and with a high specific permeation rate through membranes consisting of palladium, palladium – silver or palladium – rare earths. Silver – palladium alloys with 23 wt % silver are most suitable. The diffusion rate of hydrogen is highest at a composition close to the maximum solubility of silver in palladium (i.e., ca. 23 wt %); furthermore, material distortion by $\alpha - \beta$ phase transition in the palladium-hydrogen system is substantially decreased. Optimum operating conditions, i.e., maximum hydrogen throughput and high durability are found at 350 °C and 2 MPa hydrogen pressure. Unsaturated hydrocarbons, halogens and sulfur compounds can lead to rupture of the membrane. The hydrogen suffers a great pressure drop after permeation through the membrane, however, it is particularly pure (impurities and moisture <0.5 ppm [mL/m^3]). Palladium membrane diffusion is discussed in [255].

Portable small-sized hydrogen generators or containerized medium-sized units (the latter are constructed from modular units) can be used for

the final purification of hydrogen or for separation from raw gas mixtures, e.g., from methanol or ammonia reforming (see Section 4.5). Main parts of a module are the diffusion elements which consist of a number of silver – palladium tubes contained within a cylindrical cell.

Figure 82 shows the cell performance data of commercial pure-hydrogen plants on the basis of diffusion. The raw hydrogen must be fed to the unit at 2.1 MPa, the operating temperature is 300 °C and the average specific energy consumption amounts to ca. 100 W per cubic meter of hydrogen [256]. The process is considered suitable for small- to medium-scale plants. Metal membrane processes have not been adopted for industrial-scale hydrogen purification.

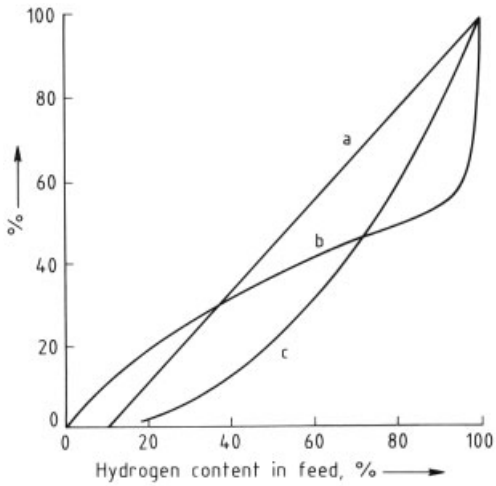

Figure 82. Operating data of hydrogen diffusion cells with Pd-Ag membranes
a) Yields (%, related to input hydrogen amount); b) Hydrogen content in off-gas (vol %); c) Cell output) (% of nominal capacity)

5.5.2. Polymer Membrane Processes

New developments in the area of polymer membrane materials also allow their utilization in gas separation technology. The main criteria for suitable separation membranes are high permeation rates together with high selectivity, pressure-resistant membrane structures and chemical as well as thermal stability. State-of-the-art membranes have asymmetric composite layer structures on a woven material support or a composite hollow-fiber membrane structure. The membrane separation stage is built as module; for gas separation module constructions with high packing densities are used, namely spiral-wound modules ($> 900\ m^2/m^3$) and hollowfiber modules ($9000\ m^2/m^3$). An overview is given in [257][258][259]. From the process point of view various module arrangements such as cascades or membrane columns [260] may be used.

Asymmetric composite membranes based on cellulose acetate or polysulfones have a particularly high specific permeability for hydrogen, as do aromatic polyimide membranes; they are used for the industrial scale separation of hydrogen.

The product of Permea, a Monsanto company, is leading in this field. The Perma Prism process [261] uses asymmetrical hollow-fiber membranes of polysulfone with an active siloxane layer (300 – 500 μm outer diameter, 100 – 250 μm inner diameter, effective siloxane separating layer 0.1 μm). Several 10 000 of hollow fibers are connected together in a module, as shown in Figure 83. The fiber bundle is sealed at one end (top) and enclosed in an epoxide mantle at the other end. The modules are installed vertically and have a diameter of 100 or 200 mm and a maximum length of 3 or 6 m. The feed gas, which should be freed of disturbing components (NH_3, H_2S, CH_3OH) by a suitable scrubbing system, is fed into the module near the base. The permeate is removed from the base of the module while the remaining gas is removed from the top. The fibers can be operated with a pressure of up to 15 MPa, whereby the pressure difference may amount to 7 MPa. The operating temperature can be up to 100 °C.

The stability of the membranes towards impurities is given in % of the corresponding saturation value at 20 °C:

Hydrogen sulfide	up to 10 % of the saturation value
Ammonia	up to 2 % of the saturation value
Water	up to 100 % of the saturation value
Hydrocarbons ($C_2 - C_6$)	up to 80 % of the saturation value

The degree of purity and the hydrogen recovery rate are determined by the partial pressure difference between the inside and the outside of the hollow fiber, the remaining gas components

(i.e., their permeation coefficient) and their partial pressure.

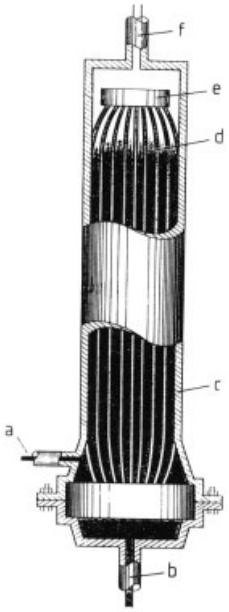

Figure 83. The Prism separator module of Permea
a) Feed stream of mixed gases; b) Permeate gas outlet; c) ASME-coded carbon steel shell; d) Hollow fiber membranes; e) Fiber bundle plug; f) Nonpermeate gas outlet

Figure 84 A shows the rate of hydrogen recovery and the obtainable purity as a function of various hydrogen contents in the raw gas. Plots for two feeds (70 % and 40 % H_2) in Figure 84 B show that the ratio of total pressures dramatically affects permeate purity, whereas the effect of further increase in membrane selectivity leads to a plateau above a selectivity factor of 40.

Hollow-fiber separators were adopted quickly for commercial applications, more than 160 membrane separation systems have been installed for hydrogen recovery since 1979. Preferred applications are hydrogen recovery from purge gases of ammonia or methanol synthesis loops or from other hydrogen containing gases in the refinery or gas industries. Table 34 gives a survey. Figure 85 shows the process scheme of a plant for hydrogen recovery from the purge gas of a 545 t/d ammonia plant. 3000 m^3 (STP)/h gas is led through two rows of modules (containing 8 and 4 modules, respectively) at various pressure levels, 90 % of the hydrogen thereby being recovered. This system is especially useful, because a part of the hydrogen can be led back to the synthesis stage at 7 MPa. In a 1000 t/d ammonia plant the recovered hydrogen leads to an additional ammonia production of 40 t/d (ca. 5 %) [262]. However, other valuable components of the gas, such as argon, cannot be recovered in a pure form.

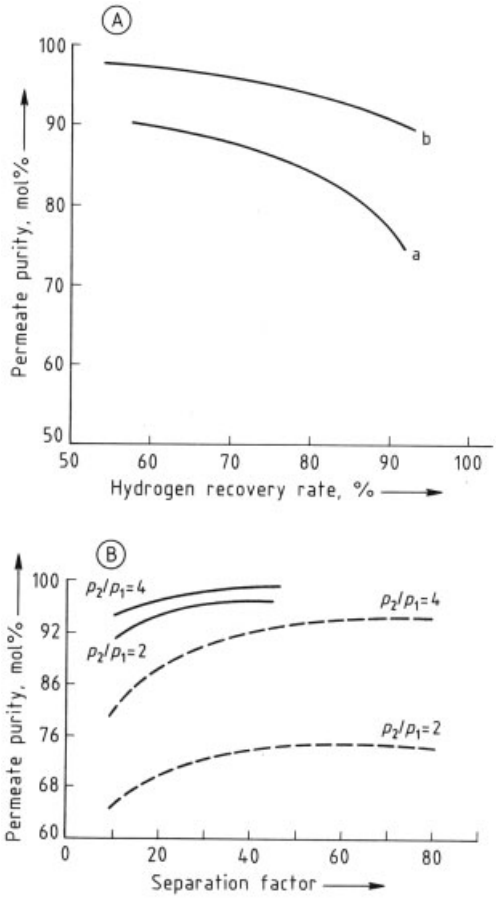

Figure 84. A) Obtainable hydrogen purity vs. hydrogen recovery rate
a) Partial pressure difference 3.52 MPa, H_2 in feed 63 vol %; b) Partial pressure difference 3.52 MPa, H_2 in feed 86 vol %B) Permeate purity with two feeds at different pressure ratios [257] —— 40 % H_2, 60 % C_1; —— 70 % H_2, 30 % C_1
p_1 = permeate pressure, p_2 = feed gas pressure

Table 34. Hydrogen containing gases membrane modules can handle

Source of feedgas	Components		Pressure, MPa	Product composition, % H_2	Pretreatment, remarks
	% H_2	others			
Ammonia synthesis purge gas	60	N_2, CH_4, Ar, NH_3	13.0	H_2, 85	water wash, NH_3– conc. $<$200 ppm (mL/m^3)
Methanol synthesis purge gas	58	CO, CO_2, N_2, CH_4, CH_3OH, H_2O	5.0	H_2, CO_2, 80	water wash, CH_3OH conc. $<$100 ppm (mL/m^3)
Catalytic reformer off-gas	70 – 80	CH_4, alkanes, aromatics	3.0 – 5.0	H_2, 95	oil separation by refrigeration or oil scrubber, C_2– C_6 $<$80 % satur. aromatics $<$50 ppm (mL/m^3)
Catalytic cracker purge gas	10 – 30	N_2, O_2, CH_4, CO, CO_2, H_2S, alkenes, higher and lower olefins, aromatics	0.7 – 1.4	H_2, 60 – 80	compression, water wash
Hydrocracker purge gas	75	CH_4, H_2S, H_2O, NH_4, alkenes, aromatics	7.0 – 11.0	H_2, 95	aromatics $<$50 ppm (mL/m^3)
Hydrotreater purge gas	60	CH_4, H_2O, alkenes, aromatics	35 – 50	H_2, 97	feed $<$30 mol % H_2, uneconomic, aromatics $<$50 ppm (mL/m^3)
Toluene hydrodealkylation		CH_4, H_2O, alkenes, aromatics	30	H_2	oil separation by refrigeration or scrubber, aromatics $<$50 ppm, (mL/m^3)
Steam – methane reformer gas		CH_4, CO, CO_2, H_2O	30 – 80	H_2, H_2/CO_2	
Oxo-synthesis gas	70	CO	variable	H_2/CO 1 : 1	H_2/CO adjustment

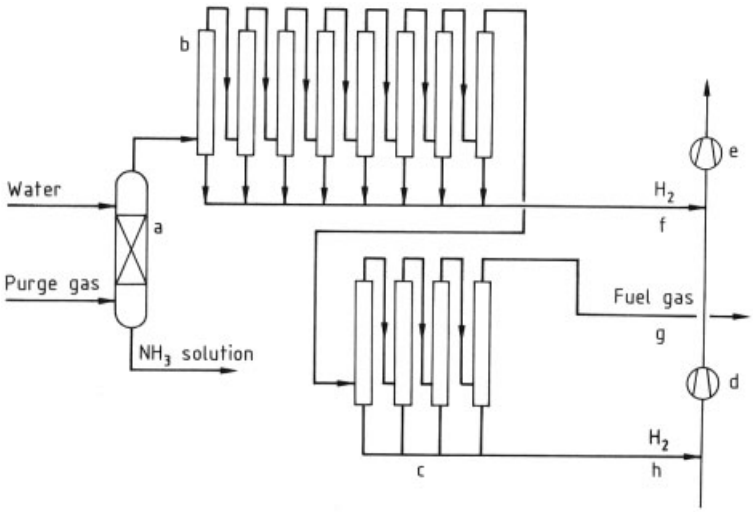

Figure 85. Flowsheet of a hydrogen recovery unit with Prism separator modules in an ammonia plant
a) Water scrubber; b) First bank Prism separators; c) Second bank Prism separators; d) Syngas compressor first stage (2.4 MPa suction pressure); e) Syngas compressor second stage (6.8 MPa suction pressure); f) H_2 recycle to second stage suction syngas compressor; g) Fuel gas to NO_x abatement or primary reformer; h) H_2 recycle to first stage suction syngas compressor

6. Liquefaction of Hydrogen

The boiling point of hydrogen is 20.39 K at 101.3 kPa (see Table 2) for n-H_2 and 20.26 K for p-H_2. For more details on the physical properties of n-H_2 and p-H_2 see Chapter 2.

Like other gases, hydrogen is liquefied because storage and transportation is easier in the condensed state. Further applications of liquid hydrogen are rocket propulsion and scientific experiments, e.g., bubble chambers which are used to produce visible trails of various particles involved in reactions of nuclei and elementary particles. A wide application for liquid hydro-

gen is predicted in the future hydrogen energy concept (see Chap. 9).

6.1. Principles of Hydrogen Liquefaction

For the liquefication of gases [263] energy must be removed until the condensation point is reached. This is achieved either by cooling down to low temperatures with external means, such as liquid nitrogen or the magneto-caloric effect, or internally by irreversible or isentropic decompression.

The decompression of hydrogen in a *throttle valve* can only lead to a temperature decrease in a certain range of the Joule – Thomson curve (see Fig. 5). The range which is used technically is from 77 K, the boiling point of liquid nitrogen at 0.1 MPa, down to 25 K. In this range (see Fig. 86) the isenthalpic lines (H = constant) in the $T - S$ diagram are particularly steep. The decompression in the throttle leads to a decrease in temperature or, at the boiling point, to a high degree of liquefaction at a constant temperature. The whole range of the isenthalpic lines, isobars and isochores in the $T - S$ diagram, especially in the two-phase areas and around the triple point is given in [264].

Isentropic decompression in turbines or other machines is, generally speaking, possible in all temperature ranges. However, control of the two-phase streams in the neighborhood of the condensation point leads to technical problems. Apart from this, the efficiency of a decompression machine decreases for technical reasons at low temperatures. Therefore, this process is only used for hydrogen above 25 K.

Applying a *magnetic field* to a magnetic substance causes an alteration in the inner structure of the material which in turn leads to a temperature change. In particular, demagnetization of certain metals in the neighborhood of the Curie temperature leads to a maximum temperature decrease. (The Curie temperature is the temperature above which ferro-magnetic material reverts to the paramagnetic state.) Under favorable conditions an isentropic temperature decrease of 1 K/T flux density may be attained.

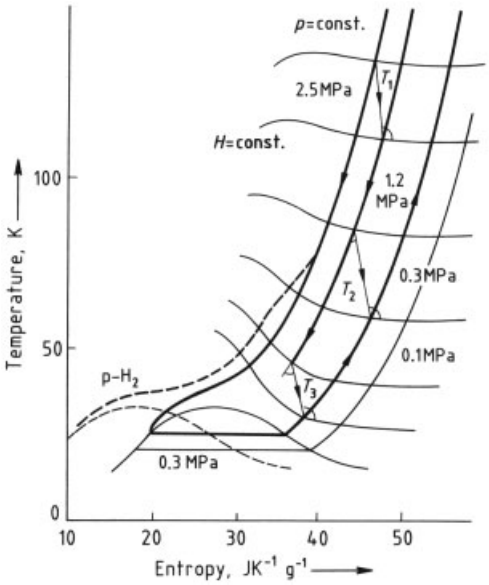

Figure 86. Temperature entropy diagram of n-hydrogen. Illustrated are the liquefaction process and the cooling cycle for a modern liquefaction process, described in Figure 88

To obtain greater temperature differences respectively entropy changes, metals or alloys with different Curie temperatures of the components are necessary. For the liquefaction of hydrogen the rare earths (in particular gadolinium), their compounds and alloys are suitable. For a detailed description of the magneto-caloric effect in cryogenic refrigeration processes see [265] and [266].

Hydrogen liquefaction is technically achieved by a series of cyclic processes. The theoretical lowest energy consumption (minimum work) in a reversible Carnot process for the production of liquid p-H_2 (0.1 MPa) from gaseous n – H_2 (25 °C, 0.1 MPa) amounts to 14.23 kJ/g = 3.95 kWh/kg.

In natural hydrogen (n-H_2) at 25 °C the ratio of the nuclear spin isomers o-H_2 and p-H_2 is ca. 0.75 : 0.25. At the boiling point of hydrogen the equilibrium lies almost completely on the side of p-H_2 (see Section 2.1). The reaction enthalpy ΔH of the exothermal o – p conversion is in the same range as the heat of evaporation

ΔH o – p (25 K)	= 1.448 kJ/mol
ΔH n – p (25 K)	= 1.086 kJ/mol
ΔH_{evap} for p-H_2 (25 K)	= 0.811 kJ/mol
ΔH_{evap} for n-H_2 (25 K)	= 0.828 kJ/mol

Thus, if the reaction rate of the o – p-conversion is large in comparison to the retention time in storage and transport vessels, a major part of stored liquid n-hydrogen is evaporated even after a few days [267]. In addition, heat losses through the insulation occur. For this reason, technical hydrogen liquefaction units have o – p conversion reactors incorporated into the process. The o – p conversion takes place on iron oxide gel, iron hydroxide and chromium oxide on alumina catalysts.

The heat of reaction of the o – p conversion must be compensated for by additional refrigeration capacity of the liquefaction unit. In the ideal case the reaction should take place along the equilibrium line (see Fig. 1), because then the lowest reaction enthalpy is involved and the necessary refrigeration is thermodynamically favorable, because it can be delivered at the highest temperature level. In technical plants this ideal case can be simulated by using a cascade of adiabatic or isothermal reactors.

Particular requirements are placed on the purity of the hydrogen to be liquefied, because at liquid hydrogen temperatures all impurities except helium become solid and this would lead to a blockage of the refrigeration unit. Before liquefaction hydrogen of $> 99.5\,\%$ purity from electrolysis or of 99.99 % purity from a PSA plant is subjected to the following purification steps:

1) Oxygen removal by catalytic conversion in an adiabatic reactor at ambient inlet temperature (electrolysis);
2) Adsorptive drying (electrolysis);
3) Adsorptive removal of remaining impurities nitrogen, methane, argon, carbon monoxide near their condensation temperatures, technically usually at LN_2 temperature, (the adsorbers are regenerated with a fraction of heated hydrogen product) (electrolysis and PSA)

The various purification processes are described in more detail in Chapter 5.

6.2. Liquefaction Plants

Up to now, there are only a few hydrogen liquefaction plants operational in the world. The largest, with capacities up to 60 t/d, are in the United States and distribute liquid hydrogen throughout the whole country for general industry purposes and, in particular, as a rocket fuel to the space industry.

Some smaller plants are in operation in Europe, serving also space-transport related purposes, such as in Southern France, or scientific purposes as in the Federal Republic of Germany. The latest plant with a capacity of 5 t/d was erected in the Netherlands in 1988. For the first time European gas customers are to be delivered with liquid hydrogen from this plant. Very large plants have been described. Examples are those envisioned for the hydrogen energy concept with 10 modules, each of a capacity of 250 t/d [268].

Small plants use the Linde – Hampson process for liquefaction of hydrogen [269, 270]. The refrigeration is produced by expansion through a throttle at low temperatures. Precooling with liquid nitrogen (LN_2) at reduced pressure (*bp* 65 K) and relatively high hydrogen pressure (e.g., 12 MPa) is necessary. If liquid hydrogen is used directly, without storage, e.g., for bubble chambers, the o – p conversion becomes unnecessary. The liquefaction unit becomes simpler, although the specific energy consumption of 100 kJ/g (including the LN_2 consumption) still remains high.

The process can also be conducted in two steps. Thereby, the hydrogen is expanded to an intermediate pressure after LN_2 cooling and part is recycled to the second stage of the compressor. In Figure 87 a two-stage Linde-Hampson process is shown.

Large-scale plants for hydrogen liquefaction not only utilize Joule – Thomson decompression for the production of the necessary refrigeration but also the decompression of hydrogen in turbines.

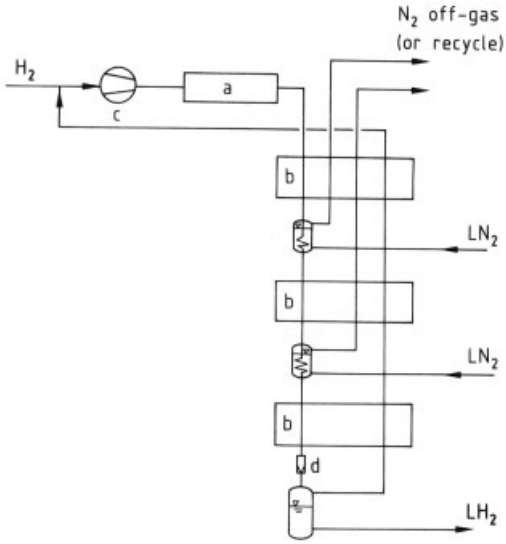

Figure 87. Hydrogen liquefaction for a two-stage Linde – Hampson process
a) Prepurification, adsorption; b) Heat exchanger; c) Hydrogen compressor; d) Expansion valve

Figure 88 shows the process scheme of a hydrogen liquefaction unit without nitrogen precooling [271]. Purified hydrogen is cooled down to ca. 85 K in three heat exchangers against *decompressed* recycle hydrogen. A parallel stream of *pressurized* recycle hydrogen is also cooled down and, in the first turbine, provides part of the necessary refrigeration. In two further decompression stages the refrigeration necessary to cool down hydrogen further and to compensate for the o-p conversion is produced. The liquefaction takes place to ca. 85 % by means of Joule – Thomson decompression of the product hydrogen before entering the last reactor heat exchanger. Completion of the liquefaction and subcooling is accomplished by heat exchange with a small fraction of the recycle hydrogen cooled by Joule – Thomson decompression to lower pressures. The recycle hydrogen quantity is ca. 12 times that of the liquefied hydrogen.

The $T-S$ diagram (see Fig. 86) shows the thermodynamic cycle of this hydrogen refrigeration process. In particular, it illustrates the enthalpy differences obtained in the expansion turbines in three temperature ranges. The efficiency and losses during the liquefaction of hydrogen are shown in the energy flux diagram of Figure 89. The specific energy consumption amounts to 60.6 kJ per gram of liquid p-H_2.

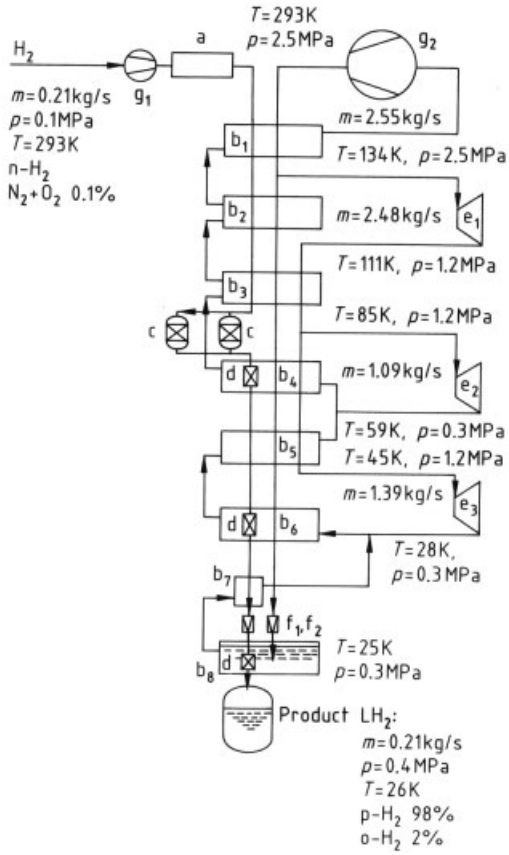

Figure 88. Process flow diagram of a commercial H_2 liquefier without LN_2 precooling (German Linde) [271]
a) Adsorptive and catalytic precleaning; $b_1 - b_8$) Heat exchangers; c) Adsorbers at LN_2 temperatures; d) o-p conversion reactor; $e_1 - e_3$) Expansion turbines; $f_1 - f_2$) Expansion values; g_1) Compressor; g_2) Recycle compressor for H_2 coolant cycle

Utilizing the energy produced in the turbines ($\eta = 0.8$) a thermodynamic efficiency of 23.7 %, corresponding to a specific consumption of 56.3 kJ per gram of p-H_2 (98 % pure, rest o-H_2), is obtained. The power consumption of the hydrogen recycle compressor can be reduced considerably, if the cooling down to the temperature of liquid nitrogen is carried out with imported LN_2, by a nitrogen refrigeration cascade or by a multi-stage cascade with various refrigerants, e.g., propene, ethylene, methane and nitrogen (see Section 4.1). The attainable saving in power must be balanced against the higher cost of the equipment and utilities (LN_2).

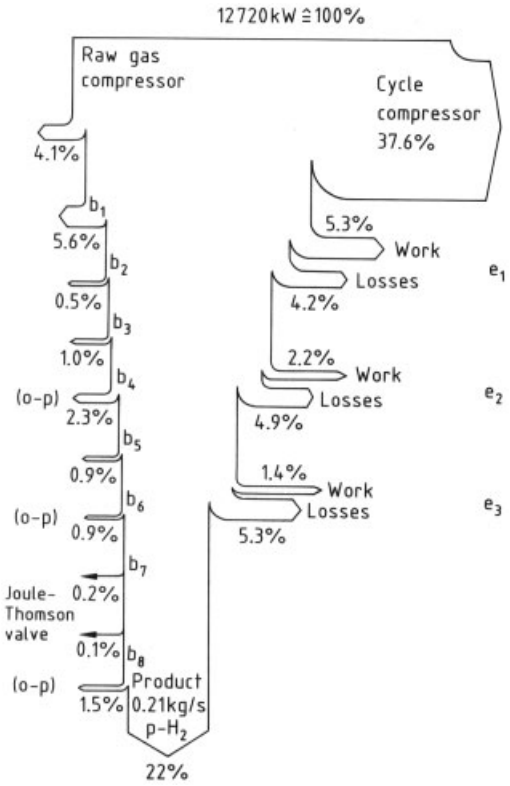

Figure 89. Sankey diagram of a commercial H_2 liquefier, revealing the losses of the process (Process according to Figure 88)
$b_1 - b_8$) Heat exchangers; $e_1 - e_3$) Expansion turbines

In large-scale plants [272] for LH_2 production, the specific energy consumption can be reduced by the following means:

1) Use of LN_2 for precooling,
2) Increased efficiency of compressors and turbines,
3) Decreased insulation losses, and
4) Decreased losses in heat exchangers and reactors.

6.3. Further Developments

Besides the Linde – Hampson process (refrigeration by isenthalpic decompression) and the Claude process (refrigeration by isentropic decompression) a number of other processes, such as the Stirling process, have been suggested for the liquefaction of hydrogen. These have been partially tested in small pilot-scale plants.

In pilot plants for low temperatures between 1 and 4 K, magnetic refrigeration has already been experimentally verified [266, 273, 274]. *Magneto-caloric refrigeration* is achieved in a similar way to thermodynamic processes, such as the isentropic expansion of gas. In the latter process the gas to be liquefied is used as a working medium, whereas in the magneto-caloric process the working medium is a ferromagnetic material (e.g., in the form of a bed through which the hydrogen is flowing).

Carnot, Stirling, Ericson and the Brayton process, which operates between two isentropes and two curves of constant magnetic field strength, can be used for the technical realization of the magneto-caloric process. The strong magnetic fields required ($\geq$10 T) can be produced with the help of superconducting magnets.

The discovery of superconductors with a transition temperature around the boiling point of liquid nitrogen [275] is expected to lead to new developments in this area. Figure 90 shows the concept of a magneto-caloric liquefier operating with helium as a cooling fluid. In the four regenerators ($d_1 - d_4$) helium is cooled by the magneto-caloric effect. After each stage a partial stream is drawn off for indirect cooling of hydrogen. For the regenerators a common magnetic field coming from a superconducting magnet (8 – 10 T) is provided. The magnet here is still cooled with liquid helium, which must be produced in an additional stage. The projected technical data of such a hydrogen liquefaction unit are listed below:

Duration of magnetocaloric cycle, s	ca. 10
Magnetic flux density, T	ca. 10
Cooling power (at 20.4 K), W	20
Liquefaction rate, L/h	0.7
Liquefaction work, kWh/kg	7.26 (54 % of Carnot)
Power consumption, W	557
Heat losses (at 300 K), W	621
Volume, L	ca. 76
Mass, kg	ca. 166

The low power consumption and the efficiency of 54 % of the Carnot cycle is remarkable [265, 270].

Hydrogen Slush. Liquid – solid hydrogen mixtures (slush) have an increased heat absorp-

tion capacity and a higher density than normal boiling liquids. This is an advantageous characteristic in space application, where longer storage times and higher storage densities are important.

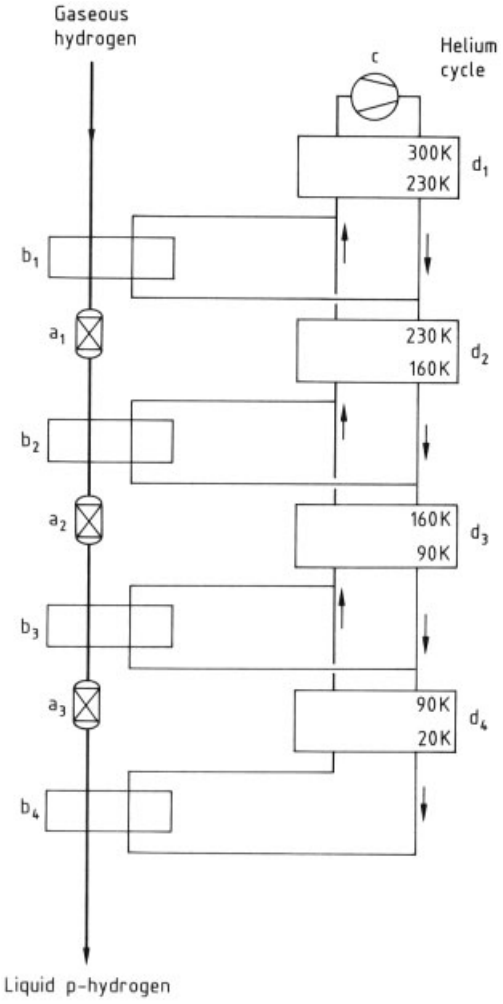

Figure 90. Principle flow diagram of a refrigerator using a magneto-caloric refrigeration cycle. The magnetic regenerators work in a cyclic mode
a) o-p Conversion reactors; b) Heat exchangers; c) Helium cycle compressor; d) Magneto-caloric regenerators

Hydrogen slush is produced by a freeze – thaw method, where vapor is continuously withdrawn from a stirred mixture of liquid and solid hydrogen, liquefied and reexpanded into the storage vessel. The latent heat of vaporization is used to freeze the hydrogen. The mixture is then at its triple point (13.8 K, p-H_2, 7 kPa) and has to be protected against air leakage into the system by keeping it under a helium atmosphere.

Solid hydrogen can also be produced by freezing liquid hydrogen at higher pressure on a surface cooled by liquid or gaseous helium. In this case the higher pressure can only be maintained if a temperature stratification can be generated at the surface of the liquid phase [276]. For properties of hydrogen slush see [277].

7. Handling of Hydrogen

7.1. Quality Specifications

The hydrogen content of technical hydrogen produced from hydrocarbons is between 97 and 99.5 vol %. The impurities are mainly methane and nitrogen; traces of oxygen, carbon monoxide, carbon dioxide and, depending on the production and purification stages, hydrogen sulfide or ammonia may be present. Hydrogen produced electrolytically is typically >99.5 vol % pure. Impurities in this case are mainly nitrogen, oxygen and water. The mercury content must be limited to max. 0.15×10^{-3} mg/m^3 (for protection of the aluminum material in the downstream purification units [278]).

Hydrogen is available in high and very high purities. The impurities are removed by means of catalytic combustion (oxygen), drying systems (water) as well as by adsorption and diffusion systems. Hydrogen of the utmost purity is needed, for example, in the semiconductor industry. It is purified by diffusion through palladium silver membranes or, more recently, by adsorption and purification on hydride material (purity 7.0, i.e., total impurities <0.1 ppm [mL/m^3]) [279]. Table 35 gives an overview of typical hydrogen purities commercially available.

7.2. Compression and Expansion

Compression. Hydrogen is often needed at high and very high pressures (e.g., for hydrogenations: 5 – 70 MPa, for ammonia synthesis: 8 – 30 MPa). Because of its low molecular mass, however, it is difficult to compress in conventional machines. Special types of compressors have therefore been developed.

Table 35. Commercial hydrogen qualities

	Hydrogen "pure"							Liquid hydrogen
	2.5	3.0	3.8	5.0	5.3	5.6	6.0	6.0
Purity, vol %	99.5	99.9	99.98	99.999	99.9993	99.9996	99.9999	99.9999
Impurities, ppm (mL/m^3)								
O_2	*	≤ 50	≤ 10	≤2	≤2	≤1	**	≤0.2
N_2		≤500	≤200	≤3	≤3	≤2		≤0.2
H_2O		≤100	≤ 20	≤5	≤2	≤1		≤0.5
CO								≤0.1
CO_2								≤0.1
C_nH_m				≤0.5	≤0.5	≤0.1		≤0.1

* Remainder N_2, O_2 and H_2O. ** Total amount of impurities ≤1 ppm (mL/m^3) thereof O_2 ≤0.5 ppm (mL/m^3) and C_nH_m ≤0.1 ppm (mL/m^3).

For very large amounts of hydrogen, (>50 000 m^3 [STP]), such as are necessary, for example, in the ammonia synthesis, *radial-type* high-pressure *turbo compressors* have become standard. Because the pressure ratio attainable with the hydrogen – nitrogen mixture is relatively low, multistage compressors are used. Leakage problems can be handled by suitable constructions. Extra stages of the synthesis gas compressor are used to recycle hydrogen. In smaller-capacity plants (<500 t/d of ammonia) the synthesis gas is compressed in so-called mole pumps. Compressor and motor are thereby enclosed in a steel mantle.

For smaller quantities of gas and high end pressures *piston compressors* are chosen. Depending on the purity requirements placed on the compressed hydrogen three types may be used:

1) *Oil-lubricated* piston compressors for the compression of hydrogen for hydrogenation of oil products.
2) If the small quantities of oil in the hydrogen stream after the oil separator or adsorber cannot be tolerated, *water-lubricated* piston compressors can be used.
3) For the compression of high-purity hydrogen *dry-running* piston compressors are used. The pistons are sealed with specially pivoted and guided PTFE (polytetrafluoroethylene) piston rings or, to avoid friction losses, with labyrinth seals. The leakage gas is fed back to the suction side of the compressor via an active carbon filter in both cases.

Smaller quantities of low-pressure gas requiring moderate compression ratios can be handled with *screw compressors.* This type of compressor is used especially in hydrogen liquefaction plants [280].

Apart from these possibilities, compression can also be achieved by pumping liquid hydrogen to the high pressure desired and then evaporating the liquid. This is used for the LH_2 injection in some hydrogen-fueled vehicle engines. Pressures up to 10 MPa may be obtained [281].

Because of the problems encountered in the compression of hydrogen, methods for the indirect compression have been considered.

In the Donor Solvent process (→ Coal Liquefaction, Chap. 3.9.4) [282] for coal hydrogenation, aromatic compounds at a low pressure of 5.0 MPa are first hydrogenated to naphthenic compounds. When the hydrogenated donor liquid is subsequently subjected to the conditions prevailing in coal hydrogenation processes (400 °C, 25 MPa), the hydrogen is set free and used for coal hydrogenation. In this way the amount of hydrogen to be compressed can be reduced considerably.

Decompression. The decompression of hydrogen-rich streams is used to produce refrigeration (see Chap. 6) and to recover energy. For high pressure differences and small amounts of gas, piston expansion machines are used; large amounts of gas are handled by turbines. For high pressure drops and large amounts of gas a multistage decompression in turbines is applied. Depending on the power and the utilization of the energy the decompressors drive either generators, brake compressors, recycle compressors or oil brakes.

The power thereby generated can be between 1 and 25×10^3 kW. Since the efficiency of turbines increases with increasing speed, high revolutions are desirable. Turbines with revolutions up to 1×10^5 rpm are built. Depending on their power rating, these turbines may have oil, gas or magnetic bearings.

7.3. Transportation and Distribution

The consumers of hydrogen in the chemical industry (ammonia plants, synthesis gas plants, petrochemical plants) usually produce hydrogen on site. Small- and medium-size consumers can also be supplied with gaseous or liquid hydrogen. The principal possibilities for hydrogen transport within the structure of regional hydrogen logistics are shown in Figure 91 [283]. In any future hydrogen energy concept, transportation of large quantities of hydrogen between regions will be necessary and for this reason, transport in pipelines or liquid hydrogen transport in tankers is under consideration.

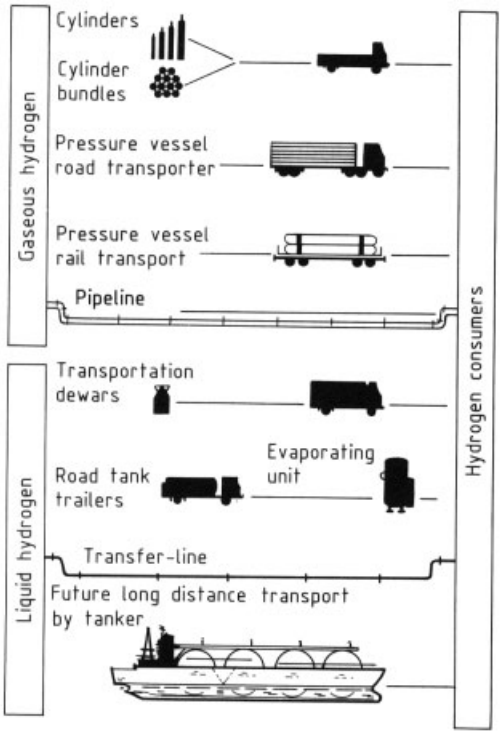

Figure 91. Possibilities for hydrogen transport

High-Pressure Hydrogen Transport. Small amounts of hydrogen can be transported in aluminum pressure cans (contents ca. 5 L H_2) and in steel cylinders of various sizes (up to 70 L with H_2 at 20 MPa). Greater amounts of hydrogen are transported in bundles of steel cylinders or in large sized pressure containers, transport being by road or rail. Modern high-pressure transports have a capacity of >4000 m^3 of hydrogen (see Fig. 92) and can be filled in less than 2 h. Oil-lubricated piston compressors are used to compress the gas to 20 MPa; oil and water adsorbers or, for higher purities, special low-temperature adsorbers assure the necessary product purity.



Figure 92. Road transporter for hydrogen with 9 seamless pressure vessels, max. operating pressure 20 MPa (courtesy of Mannesmann Röhren-Werke, Düsseldorf)

Pipelines play a particular role in the transport of large quantities of hydrogen. Table 36 gives information on existing hydrogen pipeline nets. Such nets are run, e.g., in the USA by Air Products, in France by L'Air Liquide and in the Federal Republic of Germany by Chemische Werke Hüls.

The last-named system was built in 1938. It has a length of 210 km and can transport 250×10^6 m^3 (STP)/a; four suppliers and fourteen users are tied into the system. The experience gained with this pipeline has been used to provide specifications for planning, constructing, operating and maintaining such a system [284]. If natural gas pipelines are to be converted for the transport of hydrogen, it is necessary to consider the suitability of the steel material incorporated under the expected conditions in the

Table 36. Existing hydrogen pipelines

		Length, km	Diameter, mm	Operating pressure, MPa	Flow rate capacity
L'Air Liquide, France, Belgium, Netherlands	GH_2	total 300	100	<10	
Sweden	GH_2	6 transfer lines, 6 km	50 – 250	0.01 – 2.8	10 000 m^3/h
Air Products, Houston, USA	GH_2	62	80 – 30	3.5 – 4.0	270×10^6 m^3/a
Chemische Werke Hüls, Rhein-Ruhr-Gebiet, FRG	GH_2	208	100 – 300	2.2	250×10^6 m^3/a
NASA, Florida, USA	LH_2	0.4	150	0.15	

presence of hydrogen (pressure level up to 10 MPa; cyclic loads; see Section 7.5).

LH_2 Transport. For laboratory uses liquid hydrogen is supplied in transport dewars. Larger quantities are transported in tanks (5000 L) or in tank trailers ($3 – 5\times10^4$ L); in the United States liquid hydrogen is also transported by rail (10^5 L containers). Oversea containers, containing up to 20 000 L of liquid hydrogen are used to supply the European space project Ariane in French Guayana. During the Apollo program, barges with dewars containing up to 900 m^3 of liquid hydrogen were used.

To keep evaporation losses small, the transport vessels have either perlite vacuum insulation or superinsulation (see Section 7.4). Figure 93 shows a transport dewar with an additional liquid nitrogen cooling system (evaporation loss <1 %/d) [285].

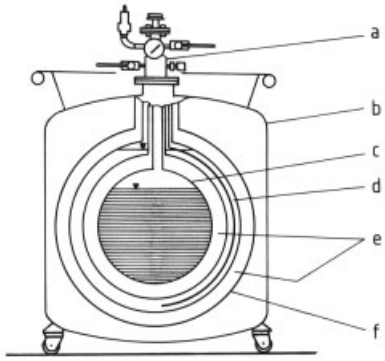

Figure 93. Laboratory transportation dewar with liquid nitrogen cooling [285]
a) Filling manifold and safety valve; b) Protective shell; c) Liquid hydrogen 21 K; d) Liquid nitrogen 77 K; e) High vacuum; f) Outer shell

Test rigs and transfer lines for liquid hydrogen in the space industry are vacuum-insulated. Piston pumps are suitable to transport small quantities of liquid hydrogen at high pressure, whereas larger quantities require multi-stage radial or axial pumps.

Transportation Costs. The total costs of the transport chain from the hydrogen production to the user site have often been assessed, e.g., in [286, 287]. A number of parameters have to be considered, e.g., to transport the same effective energy through transfer lines hydrogen requires 3.5 – 4 times the amount of compression energy compared with natural gas; the total costs are higher by a factor of 1.3 – 1.6. During the distribution of LH_2 an evaporation loss of 7 – 11 % of the handled quantity must be calculated [288]. A summary of the transport and distribution costs for hydrogen is given [289]. Pipelines are by far the most cost-effective means of transporting gaseous hydrogen over both short as well as long distances. The transport of liquid hydrogen via rail or road is ca. 5 times more expensive, the use of pressure gas cylinders is by far the most expensive (transportation costs are ca. 50 times higher, including the costs of idle equipment, such as gas cylinders and vehicles).

7.4. Storage

Conventional methods for storing hydrogen are well-proven and in service. Depending on the end use, (1) stationary, large-size storage systems, (2) stationary, small-size storage systems, and (3) mobile storage systems can be defined. The latter may be used for transport, for distribution or as a fuel reservoir for prime movers. In all these types of storage systems, hydrogen can be handled in the gaseous (GH_2) or liquid (LH_2) state.

Here methods, such as gas storage under pressure or storage in liquid form, are described. Newer concepts, such as absorption in metals (hydride storage systems) and cryoadsorber storage systems are being developed with a view to

future use and are described in Section 9.3. Table 37 shows various concepts for the storage of hydrogen [289]. For stationary, large-volume systems the optimum storage type is determined by the specific storage capacity *T*. This is the amount of energy storage capacity per unit of the rated charging power (kWh/kW). Specific storage cost estimations including further parameters, e.g., utilization, storage capability, annual cost of facility and subsystems are presented in [290].

Compressed Hydrogen Storage. Pressure storage systems of various sizes and pressure ranges are considered state of the art. The same applies for temporary storage in pipelines ("line packing"). For hydrogen, steel cylinders (up to 70 L at 20 MPa), stationary high pressure vessels (20 m^3 at 20 MPa) or low-pressure spherical vessels (15 000 m^3 at 1.2 – 1.6 MPa) are available. Low-pressure and high-pressure systems are suitable for the storage of day or week supplies.

Underground storage in caverns or aquifers is expected to be possible; storage pressure is up to 16 MPa. Gas losses up to 1 – 3 % of the storage capacity are foreseen [291]. Specific problems due to hydrogen are not anticipated, however, the availability of suitable salt and aquifer formations is limited.

Liquid Hydrogen Storage. The technique for liquid hydrogen storage is well-developed; it is used for the storage, transport, distribution of hydrogen. The vessels are insulated with double-walls (dewars), the space between the inside and outside wall is evacuated and filled with perlite (large vessels) or super-insulation. The rate of loss because of evaporation diminishes with increasing size of the vessel. The losses are defined by the amount of hydrogen evaporated daily. Laboratory vessels have 2 – 3 %, mobile LH_2 transport tanks 1 %, perlite-insulated large-volume vessels <0.1 % losses. For additional reduction of heat leakage the refrigeration available in the boil-off gas can be utilized to cool the insulation. This is achieved by radiation shields thermally connected to the vent tube [292]. Liquid hydrogen vessels are attainable from 100 L cans to large tanks with up to 5000 m^3 volume. Tanks have a high specific storage capacity (ca. 100 kWh/kW) and are suitable as long-term storage systems. Figure 94 shows a tank with a capacity of 2000 m^3 LH_2 installed at the Kennedy Space Flight Center in Florida.

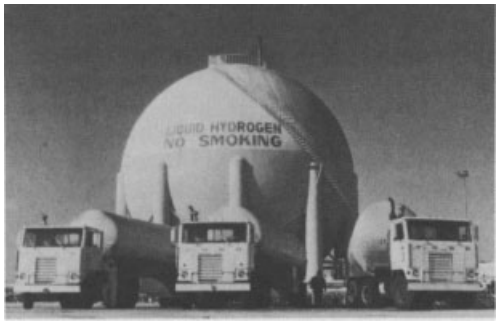

Figure 94. Liquid hydrogen tank with a capacity of 3800 m^3 LH_2 at the Kennedy Space Flight Center in Florida (Photo NASA)

Super-Insulation [293]. A large number of layers of insulation foil is wound around the inside vessel (10 – 60 layers per centimeter). A layer consists of a plastic film, both sides of which have been sputtered with metal, or it is produced from a very fine aluminum foil, which is held apart by spacers of a fabric made from glass filaments or similar material. Energy transport by radiation and conduction of the insulation material is more or less completely interrupted. Values of 5×10^{-6} $Wm^{-1}K^{-1}$ for the heat conductivity can be attained.

Liquid hydrogen storage costs have been estimated [286, 294] as has also been the cost of liquefaction [295]. The energy consumption to liquefy the hydrogen amounts to ca. 1/3 of its lower heating value.

Cost Comparison of Large-Volume Hydrogen Storage. The energy stored in a certain volume of hydrogen, relative to that stored in the same volume of natural gas, is determined by the ratio of the volumetric heating values. Therefore, for otherwise equal systems, the hydrogen storage is more expensive by the factor of ca. 3 than natural gas storage. Studies of the cost situation for various hydrogen storage systems allow the following conclusions [289]:

1) Underground hydrogen storage is the most economic method for all areas of application.

Table 37. Overview of processes and possibilities for hydrogen storage

Designation	Compressed hydrogen gas storage			Absorption by metal hydrides		Cryo-adsorption	Liquid hydrogen storage	
	below ground	low pressure	high pressure	e.g., FeTi	e.g., FeTi + MgNi		large volume tank	small volume tank
Operating conditions								
Pressure, MPa	10	1.2	15	0.3 – 5	0.3 – 5	4.2	0.15	0.15
Temperature	ambient	ambient	ambient	0 – 80 °C	80 – 300 °C	77 K	21 K	21 K
Developmental status	commercial	commercial	commercial	development	development	development	commercial	commercial
Range of application	site-dependent seasonal storage	medium capacity	short term or mobile	low to medium capacity	mobile storage	medium capacity	long term high capacity	low capacity
Specific energy storage capacity T, kWh/kW	>1000	<30	<30	<3		30 – 45	>50	
Problem areas	availability, diffusion losses		safety	costs, energy transfer	capacity, weight	refrigeration source	safety	evaporation losses, safety

2) Storage in pressure vessels is the most economic above-ground storage system when t <30 h. It is suitable for all short-term storage systems.
3) LH_2 storage is the most economic storage system above ground for $t > 30$ h.
4) It is not clear, whether the recent concepts for hydrogen storage (metal hydrides or cryoadsorber systems) (see Section 9.3) are technically and economically more favorable options.

7.5. Materials

Metallic materials are used during production, transport and storage of hydrogen. The choice of material and its stability in the presence of gaseous, liquid or electrolytically produced hydrogen is therefore of great importance and essential for safe handling of hydrogen in a future hydrogen energy carrier concept [296]. Literature on hydrogen and corrosion is given in [297 – 299].

Mechanism of Hydrogen Corrosion. The destruction caused by hydrogen in various materials occurs via different mechanisms. The starting point is always the formation of diffusable *atomic* hydrogen. This can be formed by: hydrogen ions, thermal dissociation, or chemisorption and dissociation on active metal surfaces.

The embrittlement induced by formation of atomic hydrogen is well-known in electrolytical processes with gaseous hydrogen. Such defects are mainly encountered if the material surface is activated by plastic deformation, i.e., cyclic stress loading makes a metal more susceptible to hydrogen attack.

Atomic hydrogen is dissolved in the material, whereby it either occupies interstitial sites or accumulates in so-called traps. The reactions which lead to damage are described.

Types of Reaction Leading to Damage. The dissolved diffusable atomic hydrogen can interact with lattice dislocations, lattice defects, internal surfaces, or fields of tensile strain caused by mechanical distortion of the material. At these locations, segregation of the material occurs if the concentration of accumulated hydrogen atoms reaches a critical value. The formation of cracks is thereby initiated or, if microcracks or intergranular fractures are present, crack growth is enhanced (HIC, hydrogen-induced cracking [300]).

Hydrogen can react with the material and form hydrides, e.g., with titanium, niobium, tantalum, molybdenum and tungsten. Because of the fact that enhanced hydride formation takes place in the stress field of cracks, and that hydrides are extremely brittle materials, such elements in alloys can lead to hydrogen embrittlement.

A reaction of hydrogen with carbon contained in ferritic steels and alloys at higher temperature ($t > 200$ °C) is methane formation. This interaction is called decarburization.

$$Fe_3C + 4\,H \rightarrow 3\,Fe + CH_4$$

Recombination of atomic hydrogen to form molecular hydrogen can also be observed. Both

reactions, formation of molecular hydrogen and methane, cause high internal pressures because a gas is trapped inside the material. This can lead to a weakening at the grain boundary, followed by formation of cavities, internal cracks and blistering (fish eyes). Macrocracks can form, if the material is placed under strain.

Effects of Hydrogen Pressure Below Temperatures of 200 °C. At constant pressure no critical reaction is observed. Carbon steel equipment may be used up to a recommended hydrogen pressure of 90.0 MPa. At higher pressure austenitic stainless steel should be used.

In areas where the strain changes periodically, e.g., in transport and storage vessels, changes in the ductility and rate of crack formation have been observed. These changes are influenced by the hydrogen pressure, the temperature, and the frequency of the cycling. The rate of the fissure formation was found to increase by a factor of 3 – 100, depending on the cycle frequency and hydrogen pressure as compared to the same treatment in a hydrogen-free atmosphere [301].

Effects of Hydrogen Pressure at Temperatures Above 200 °C. Hydrogen attack with accompanying decarburization by methane formation occurs at >200 °C and increases rapidly with increasing temperature. It depends on the hydrogen partial pressure and on the type of alloyed steel. Metals such as chromium, molybdenum, tungsten, vanadium, titanium, and niobium reduce the number of nucleation sites by lowering the amount of carbon available for methane formation (carbide stabilizers). The behavior of steel at elevated temperature and hydrogen pressure is summarized in a diagram (see Fig. 95). The original curves "Operating Limits for Steels in Hydrogen Service" were first published by G. A. Nelson in 1949 [302]. They were developed as a result of data from a variety of commercial processes and laboratory experiments. Periodic revisions have been made over the years, the latest being published in [303].

Below and to the left of the curves for each alloy satisfactory service has been experienced at periods of exposure up to 35 a. The length of time before hydrogen attack can be detected is termed the "incubation period". It is maintained, that during the incubation period methane pressure builds up in submicroscopic voids; when a void reaches a critical size, microscopically visible fissures appear and the growth rate thereof increases [304]. At temperatures >540 °C the curves are not verified. In this temperature range, high-alloy austenitic steels, which resist decarburization, must be used.

Importance of Foreign Substances. Impurities in hydrogen can inhibit hydrogen attack more or less. Carbon monoxide and water reduce the corrosion activity, oxygen and sulfur dioxide are particularly inhibitive.

Ammonia causes the formation of nitride layers on steel which, when subject to deformation, are ruptured. For this reason, steels used for ammonia synthesis plants must be suitable for both hydrogen and nitride attack. Above 600 °C carbon monoxide causes a carburization of the material. Below 450 °C carbonyl formation can occur which simply removes layers from the iron surface (maximum at P_{CO} 12.5 MPa, 250 °C). Carbon dioxide and hydrogen sulfide are strongly oxidizing at elevated temperatures and can accelerate hydrogen attack. A knowledge of the various forms of hydrogen attack on metallic materials together with the effect of other gas components is especially necessary for high-pressure processes. The choice of material is of particular importance. A summary is given in [305].

Other Hydrogen-Resistant Materials. Other hydrogen-resistant materials are:

Copper and copper alloys up to 400 °C,
Nickel up to 250 °C,
Monel up to 250 °C, and
Inconell up to 540 °C.

For temperatures > 1400 °C the following materials are suitable:

Aluminum oxide
Zirconium oxide
Silicon carbide
Silicon nitride

In general, plastics are not subject to attack by hydrogen at ambient temperatures. At higher temperature, the following materials are suitable:

Poly(vinyl chloride) and polyethylene (up to ca. 60 °C)

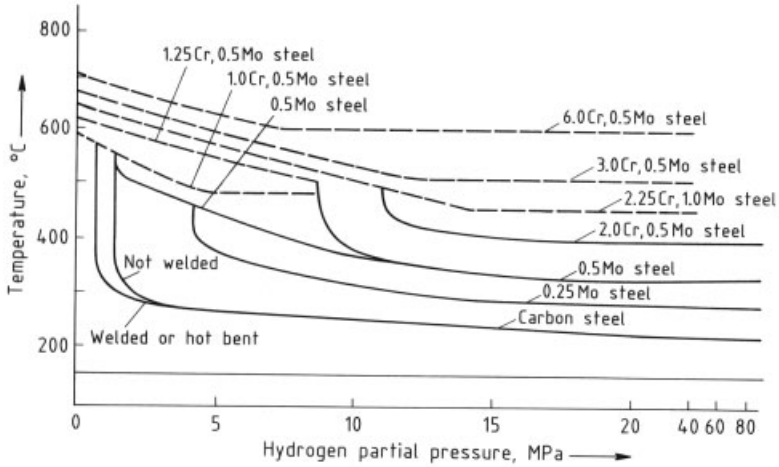

Figure 95. Operating limits for steels in hydrogen service (Nelson diagram)
——— surface decarburization; —— internal decarburization (hydrogen attack)

Polychloroprene and polyisobutylene (up to ca. 100 °C)
Poly(tetrafluoroethylene) (up to ca. 250 °C)

Materials for Liquid Hydrogen (LH_2). At the low temperatures of liquid hydrogen none of the corrosion inducing mechanisms can take place. Material problems are reduced to the effect on mechanical properties.

Mechanical design with metallic and nonmetallic materials at low temperatures as well as construction and assembly methods are compiled [306]. The alteration of material properties, such as elastic moduli, fracture behavior, plasticity and fatigue behavior, is handled in detail.

Only a few metals and alloys commercially available are used in cryogenic engineering. Aluminum alloys are widely used, because of their relative cheapness, good weldability and high toughness. Austenitic steels (300 series) are also widely used, because they retain high strength and good ductility down to low temperature. For cryogenic work, low carbon grades are preferred to prevent the precipitation of chromium carbides during welding. Other materials used are nickel-iron, titanium, and copper alloys.

Selection and use of organic polymer materials at cryogenic temperatures is described [307]. Modification of epoxy or polyester resins by incorporation of inert fillers or the use of fiber-reinforced composite materials and laminated structures using glass, Kevlar, carbon, etc., give materials satisfactory for cryogenic service.

7.6. Removal of Hydrogen

The removal of hydrogen may become necessary, if it develops in an uncontrolled manner and causes a safety risk or if a gas must be purified from traces of hydrogen. Normally, hydrogen, which cannot be utilized, is burned, often together with other disturbing compounds and combustible waste gases. If the hydrogen content is not sufficient to support a flame, the so-called flameless combustion with oxygen at 700 – 800 °C with external heating can be used. This technique is applied particularly often for fume incinerators.

More common is the catalytic combustion on noble metal catalysts (Deoxo) or mixed-oxide catalysts, e.g., CuO – MnO_2 (Hopcalite or similar) [308]; catalytic recombinators are also used in maintenance-free lead accumulators.

Further, hydrogen can be removed by absorption and oxidation, e.g., by aqueous solutions of silver or palladium salts or sodium chlorate. As a solid "absorbent" copper oxide or nickel oxide is suitable.

$$CuO + H_2 \rightarrow Cu + H_2O$$

$$NiO + H_2 \rightarrow Ni + H_2O$$

For the removal of 1 m^3 (STP) of hydrogen ca. 3 kg of copper in the form of copper oxide are

necessary; the reaction takes place at 200 °C, the catalyst can be regenerated with air. For production of high-purity inert gases hydrogen traces can also be removed by means of hydride material (see Section 9.3.1).

Hydrogen Mitigation in the Nuclear Industry. During normal operation in water-moderated nuclear reactors small amounts of hydrogen are permanently formed by radiolytic splitting of water. In the waste-gas system of nuclear plants recombinators are installed. These are usually commercially available catalytic or thermal units.

In case of a nuclear core uncovery accident, hydrogen may be produced by several mechanisms. (1) The exothermic zircalloy – steam reaction occurs once the fuel cladding reaches temperatures of 900 – 1200 °C. (2) A considerable degree of radiolytic water cleavage inevitably accompanies an emergency core cooling procedure (with a great amount of water) for a period of time after the loss of the coolant has occurred. Hazard analysis studies provide values of 5000 m^3 of hydrogen formed within 50 d [309]. It is believed that at Three Miles Island hydrogen amounting to 8 vol % (370 kg) accumulated in the atmosphere of the containment building. (3) The interaction of a hypothetical core melt with concrete or other materials present within a containment system is considered to be an additional source of hydrogen.

Various specific countermeasures to cope with the hydrogen problem have been studied; some of them have been proposed for installation or have been implemented [310]. First of all, hydrogen distribution is to be prevented by subcompartmented containments, and devices to reduce hydrogen concentration should be provided (fans, recombinators, etc.). In case of massive hydrogen release in small containments, blanketing with nitrogen is foreseen, whereas in intermediate containments the use of water fogs or Halon 1301 injection is recommended to mitigate hydrogen deflagration risk and inhibit combustion. Finally, deliberate ignition and controlled burning systems are reported to be effective hydrogen controlling measures, whereby catalytic and spark hydrogen igniters can be used [311, 312].

7.7. Safety Aspects

General. Hydrogen forms inflammable and explosive mixtures with oxygen and other elements. Basic ignition and explosion data are given in Section 2.3. For comprehensive compilations of safety characteristics and hazards on handling hydrogen see [313 – 315].

The envisaged large-scale introduction of hydrogen as an energy carrier requires a comparative evaluation of safety aspects with regard to other fuels. Comparative data for methane (representing natural gas), propane and gasoline are shown in Table 10. Volumetric leakage of hydrogen gas will be 1.3 – 2.8 times as large as gaseous methane leakage and approximately four times that of air under the same conditions (rule: “air-proof is not hydrogen-proof”).

Released hydrogen disperses rapidly by turbulent convection, drift and buoyancy, thus shortening the hazard duration. The prompt dispersion, however, favors the formation of gas mixtures within the wide flammability and detonability limits; the lower limit is the vital one in most applications and is comparable to that of other fuels.

The minimum energy for ignition of hydrogen – air mixtures is extremely low. However, the ignition energy inherent in virtually every source is more than sufficient for ignition of any other fuel – air mixture as well. Ignition by catalytic action is also possible.

Fire Hazards. Hydrogen flames are nearly invisible in daylight. Fire-detection technology is summarized in [316]. Hydrogen fires last only one fifth to one tenth of the time of hydrocarbon fires, and the fire damage is less severe because of several characteristics:

1) high burning rate resulting from rapid mixing and high propagation velocity,
2) high buoyant velocity,
3) high rate of vapor generation of liquid hydrogen

Although the maximum flame temperature is not much different from that of other fuels, the thermal energy radiated from the flame is only a part of that of a natural gas flame. Smoke inhalation, one of the major causes of injury and, therefore, a main parameter of fire damage, is considered less serious in the case of hydrogen

because the sole combustion product is water vapor.

Explosive Hazards. High laminar burning velocity as well as the high laminar flame speed of hydrogen makes the transition to turbulent flame speeds exceeding 800 m/s up to several km/s easy. Hence, hydrogen is more sensitive to *deflagration to detonation transition* (DDT) than hydrocarbons. Studies on DDT mechanisms are referred to in [317]. Hydrogen has by far the widest limits of detonability; detonation of stoichiometric hydrogen – air mixtures in confined spaces will produce a static pressure rise of ca. 15 : 1. If a DDT process precedes, i.e., unburnt hydrogen – air mixtures are precompressed, a pressure rise ratio of 120 : 1 could result.

Explosions are rated in terms of the amount of energy released, commonly expressed as an equivalent quantity of TNT. The theoretical maximum values of explosive potentials for fuels (TNT equivalents) are recorded in Table 20. Experimental data indicate, that real yield factors of 10 % are considered reasonable. Note that hydrogen is most potent on a mass basis and least potent on a volumetric basis. It has also the least theoretical explosive potential, when equivalent energy storage is taken into account.

Preventive Measures. After analyzing accidents involving hydrogen and hydrogen-carrying equipment, preventive safety aspects are discussed in [318]. Risk avoidance by general preventive design measures, as well as reactive fire and explosion measures are presented [315, 318, 319]. In safety concepts, distinctions are made between primary, secondary and tertiary measures. *Primary safety precautions* aim at the exclusion of causative risks such as leakage, formation of explosive mixtures by proper conceptual design (inertization, open-air installation, flame arrestors, etc.). *Secondary measures* consist mainly in the avoidance of ignition sources of any kind (electrostatically or mechanically generated sparks). *Tertiary measures* should minimize dangerous results in case fire or explosion occurs. This is achieved by installation of explosion-proof or explosion relief systems, hydrogen process shut-down systems and suitable fire extinguishing systems.

Safety Regulations. Regulations (mandatory) and standards (mandatory or nonmandatory) apply for the safe production, storage and handling of hydrogen. They are mostly concerned with transportation; other operations are covered by more general regulations. Excellent listings are given for the United States [320] and for Canada [315].

United States. Examples of *nonmandatory standards* are those issued by ASME, ANSI, NFPA, etc., that may be adopted by regulatory bodies. Current *mandatory regulations* are Title 49 of CFR (Code of Federal Regulations) and the requirements of DOT (Department of Transport) and CGA (Compressor Gas Association). General industrial safety matters including the production and handling of inflammable compressed and liquefied gases are regulated by OSHA [321] (Occupational Safety and Health Administration).

Federal Republic of Germany. Mandatory regulations are Druckbehälterverordnungen (TRB, TRG, i.e., regulations for installations and examination of pressure vessels and filling thereof), Unfallverhütungsvorschrift Gase (UVV, i.e., instructions for the prevention of accidents) and GGVS and GGVE, (i.e., instructions for the transport of dangerous goods).

EEC Regulations. For the EEC the association of the European Gas Industry (IGC) is making efforts to introduce common and uniform safety standards.

Future Outlook. Considering the possible use of hydrogen in a future hydrogen energy concept (see Chap. 9), no major safety problems are anticipated. Hydrogen has been handled successfully for decades in the process industries. Handling as a liquid is also routine. In comparison with other inflammable gases or liquids, the safety risk of hydrogen as a fuel is not significantly different.

7.8. Toxicology

Hydrogen does not show any physiological effect. It is nonpoisonous. Inhalation of the gas leads to sleepiness and a high-pitched voice. A danger of asphyxiation exists if the oxygen content sinks below 18 vol % because of hydrogen accumulation in the air. Direct skin contact with

cold gaseous or liquid hydrogen leads to numbness and a whitish coloring of the skin and to frost bite. The risk is higher than, e.g., with liquid nitrogen because of the greater temperature differences and the higher thermal conductivity of hydrogen.

7.9. Analysis

The physical properties of hydrogen, some chemical reactions, and its nuclear spin characteristics are used for hydrogen analysis.

Hydrogen in Gas Mixtures. For rapid determination or for continuous measurement in process gases the absolute determination (or the comparison to a reference gas) of properties such as *gas density, conductivity* or *sonar velocity* can be used. The most frequently used method for analysis of hydrogen in all types of gas mixtures is *gas chromatography.* Apart from mixtures also containing helium, hydrogen is eluated first. In the case of detection with a hot-wire detector using helium as carrier gas an unusual nonlinearity exists in the conductivity of hydrogen – helium mixtures, which leads to a minimum at 8 % hydrogen. This must be taken into consideration, or alternately argon can be used as carrier gas. Hydrogen contents in the percent range can be determined by separation and integral detection according to JANAK (CO_2 as carrier gas, absorption of the carrier gas in KOH, volumetric determination of the gas in an azometer).

Gas-chromatographic determination of the six isotopic species and their nuclear spin isomers is possible. Alumina or silica gel at liquid nitrogen temperature [322] or complex polymer molecular sieves at room temperature [323] are suitable separation materials. If these are impregnated with paramagnetic substances such as Fe_2O_3 or $MnCl_2$, rapid o – p isomerization is achieved and the spin-isomer mixture corresponding to the equilibrium at the separation temperature is eluated [324].

Trace impurities in hydrogen can be determined qualitatively by low-temperature condensation or by enrichment on silica gel at low temperatures and, after desorption, they can be separated by gas chromatography. A method for the determination of traces of carbon monoxide or carbon dioxide is methanation and analyzed with hydrogen followed by methane detection with a sensitive flame ionization detector.

Chemically Bound Hydrogen. In *organic* molecules hydrogen is determined using classical elemental analysis. After the sample is weighed (usually in the micro- or submicro-range, i.e., 0.2 – 10 mg and 0.02 – 0.2 mg, respectively) it is combusted and the amount of water produced, as determined by weighing, is related to the hydrogen content. Nowadays automatic C, H, N analyzers with simultaneous detection systems are used. The content of hydrogen in *metals*, an important value for steel production, is determined firstly by vacuum extraction of the hydrogen from the heated or molten sample and, finally, by volumetric (vacuum pipette) or heat conductivity measurement [325]. In a new method, a sample is taken by inserting a porous ceramic bell and purging out the hydrogen with a nitrogen stream [326].

"Active hydrogen", e.g., hydrogen in OH groups or in enolizable C-H-bonds, reacts with $LiAlH_4$ or metal organic methyl compounds and can be determined as hydrogen or methane volumetrically.

Modern instrumental methods are mass spectrometry and nuclear spin resonance. By means of the first method hydrogen and its isotopes in complex gas mixtures can be analyzed over a large concentration range. Nuclear magnetic resonance (^{1}H-NMR) is an invaluable instrument for the analysis and structure determination in organic and inorganic chemistry. ^{1}H-NMR spectroscopy is also applied for quantitative determination of the hydrogen content in various materials such as coal or hydrocarbons, to measure oil and water contents, e.g., in the food industry, or to pursue intricate problems in reaction kinetics [325].

8. Conventional Uses

8.1. Hydrogen in the Chemical Industry

Hydrogen is an important raw material for the chemical industry. It takes part in reactions either by addition (hydrogenation) or by means of its reduction potential. Most of the hydrogen

is used for these hydrogenation and reduction processes. An overview on production and consumption structures for the Federal Republic of Germany (1978) and the United States (1984) is given in Figure 96 [328]. Changes in the production and utilization sector have been relatively little since that time. On the *production side* the fraction of the hydrogen produced using natural gas has increased at the expense of the LPG and naphtha-based plants. Some plants based on heavy oil have even been closed down and replaced by natural gas or lignite gasification plants. In the *utilization sector*, hydrogen production is stagnating. Apart from ammonia synthesis, synthesis with hydrogen – carbon monoxide gas mixtures to produce methanol, hydrocarbons and oxo-synthesis products are of particular importance. Large quantities of hydrogen are needed in refineries for hydrotreating, whereas its use in coal processing is just beginning. The use of hydrogen in metallurgy is based in particular on its reducing properties.

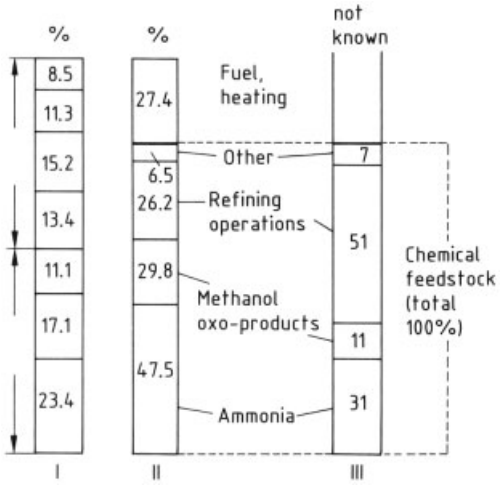

Figure 96. Hydrogen production and consumption structures
I Production, Federal Republic of Germany, 1978
II Consumption, Federal Republic of Germany, 1978
III Consumption, United States, 1984

At present, pure hydrogen is not used directly to produce energy (apart from space technology). Mixtures with hydrogen, however, have been used for a long time for combustion purposes. Even today the amount of hydrogen distributed in urban or in industrial heating gas systems is very large.

In comparing the hydrogen production or usage data, a distinction must be made between the so-called captive hydrogen and the merchant hydrogen: *Captive hydrogen* uses, such as for ammonia and methanol synthesis or in various hydrotreating processes, relate to onsite hydrogen production and immediate consumption of the hydrogen. The designation *merchant hydrogen* is given to those quantities which are sold on the market. Merchant sales of hydrogen account for 10 % or less of the total hydrogen production. Import and export amounts are normally negligible. Table 38 gives a summary of a literature survey on hydrogen quantities produced as well as some forecasts for the future.

8.1.1. Ammonia Synthesis

Hydrogen reacts with nitrogen to yield ammonia. The reaction is exothermic.

$$3\,H_2 + N_2 \rightleftharpoons 2\,NH_3;\ \Delta H_{298} = -91.22\,kJ/mol$$

For details on the properties, production and usage of ammonia see → Ammonia.

Technical ammonia syntheses are operated at 15 – 25 MPa. On a catalyst the reaction starts at ca. 350 °C, maximum reaction rates are reached in the range of 470 – 530 °C.

1 965 m^3 (STP) of hydrogen and 668 m^3 (STP) of nitrogen are necessary for each tonne of ammonia produced. For hydrogen production, the usual processes are suitable (see Section 4.1). The production of the ammonia synthesis gas is usually followed directly by the ammonia synthesis. The necessary nitrogen content in the synthesis gas is introduced by the addition of air in a secondary reformer or via a liquid nitrogen scrubber. The conversion achieved per pass is ca. 25 – 35 %, so that a recycle loop is installed. Condensed liquid ammonia is removed continuously. Impurities containing oxygen, such as carbon monoxide, carbon dioxide, oxygen and water, are catalyst poisons and must be completely removed from the synthesis gas.

The make-up gas to the synthesis loop contains certain amounts of inert gases such as methane (from methanation), argon (from the process air) or helium (from natural gas). To prevent accumulation of the inert gases in the synthesis reactor, some recycle gas must be continuously

Table 38. Consumption of hydrogen and forecast consumption amounts [329 – 338]

	Consumption of hydrogen, $m^3 \times 10^9$		
Federal Republic of Germany	1978: 17 [329]	1984: 19.1 [330]	2000: 23 [331]
Japan		1985: 20 [335]	
United States	1978: 80 [332]	1985: 90 [333]	2000: 146 – 207 [334]
Worldwide	1980: 300 [336]	1986: 500 [337]	2025: 1500 – 2000 [338]

removed from the loop, thus causing a loss of hydrogen. Most plants nowadays have a recovery unit:

cryogenic hydrogen recovery units, sometimes combined with argon production (see Section 5.1)
PSA hydrogen recovery units (see Section 5.2)
membrane separation hydrogen recovery units (see Section 5.5).

Hydrogen recovery by reversible hydride formation has also been suggested [339].

Modern synthesis plants have a capacity of 1000 – 2000 t/d; this corresponds to an hourly hydrogen requirement of 80 000 – 160 000 m^3 (STP). At present 75 – 80 % of the synthesis hydrogen is produced from natural gas, naphtha or LPG. 10 – 15 % are made from heavy fuel oil by partial oxidation and ca. 5 % from coal. Electrolysis hydrogen is used for ammonia production only in special cases, e.g., if cheap electric power is available. Small units are situated in Norway, Peru and Egypt [340], producing ca. 5 % of the world production of hydrogen.

An ammonia molecule contains three hydrogen atoms. For hydrogen utilization in future energy systems (see Chap. 9), ammonia has often been suggested as a carrier. Hydrogen could be stored and transported more economically in the form of ammonia [341], but the latter is untenable as a direct fuel because of its toxicity and the formation of NO_x. However, on reconverting the ammonia to hydrogen the stored energy can be made available at any desired site. An overview of the possibilities of an ammonia-hydrogen concept in energy technology is given in [342].

8.1.2. Hydrogen in Refinery Processes (→ Oil Refining)

In refineries hydrogenation processes are included to increase the hydrogen content of the heavy crude oil fractions and to produce lighter fractions by reduction of the molecular mass. At the same time, undesirable elements, such as sulfur, nitrogen and metals, can be removed. For this group of related processes the designation hydroprocessing is used.

Process Fundamentals. Hydrogenation processes are characterized according to the feedstock, the partial pressure of the hydrogen used and the reaction temperature (see Fig. 97) [343]. In *hydrotreating processes* addition reactions and hydrogenating cleavage (hydrogenolysis) occur. In *hydrocracking processes* mainly dehydrogenation, cracking, isomerization and dealkylation reactions take place. For the catalysts used in the individual processes, promoter and carrier materials, selectivity, lifetimes, coke and metal deposition see [344]; a compilation of available hydroprocessing catalysts is given in [345]. Newly developed bi- or multifunctional catalyst systems based on zeolites combine cracking functions on acid centers of the carrier materials with hydrogenation and dehydrogenation functions of the active metal components.

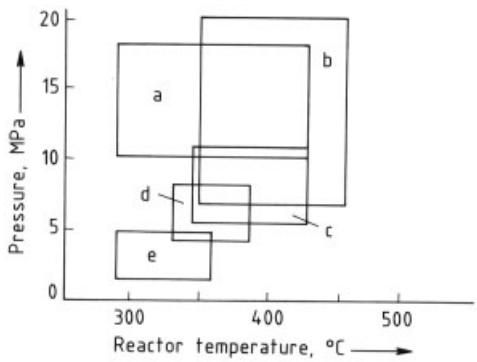

Figure 97. Process temperatures and pressures of refinery hydrogenating processes
a) Hydrocracking; b) Residue desulfurization; c) Heavy gas oil catalytic cracker feed hydrofining; d) Middle distillate; e) Naphtha hydrofining

The processes are carried out in one or two stages in the gaseous or liquid phase. Table 39 shows some examples of the most important hydroprocessing routes, typical process conditions and product ranges. Overviews are given in [346] and [347].

The use of hydrogen has also been suggested in other refinery areas; addition of hydrogen to the crude oil distillation is reported to make this more economic (*hydrostripping*, [348]). Subjecting residual oils or heavy crudes to hydrogen for short periods at high temperatures and pressures of up to 50 MPa leads to feed upgrading (*hydropyrolysis*, [349]).

Hydrogen Requirements. The hydrogen necessary for the hydroprocessing is produced in the refinery. The main source is the catalytic reforming unit where ca. 45 m^3 of hydrogen per ton of processed crude oil is produced. Additional hydrogen is produced by steam reforming of methane, LPG, and naphtha, and by partial oxidation. In the United States 60 – 70 % is produced by catalytic reforming, 30 % by steam reforming, and 2 % by partial oxidation.

The connections between processes utilizing and processes producing hydrogen in oil refining operations are shown schematically in Figure 98.

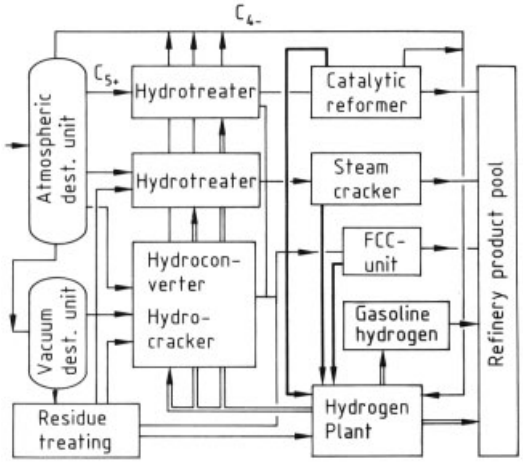

Figure 98. Integration of H_2-producing and H_2-consuming process units into crude oil processing
$\longrightarrow$ H_2 units from H_2-producing process
$\Rightarrow$ H_2 units to H_2-consuming process

The carbon:hydrogen ratio in the feedstocks (heavy and residual crudes, tar sands, oil shale) as well as their sulfur, nitrogen and metal components will become increasingly unfavorable in the future. To cover the expected increasing hydrogen demand it is necessary to improve the hydrogen recovery in refineries and, eventually, to utilize other potential sources of byproduct hydrogen.

8.1.3. Hydrogen in Coal Refinement

Coal refinement processes which are performed in the presence of hydrogen are coal hydrogenation, hydropyrolysis and hydrogenating coal gasification.

Coal Hydrogenation. (→ Coal Liquefaction, Chap. 3, the first three Sections). By thermal or thermocatalytical treatment in the presence of hydrogen under pressure, coal is almost completely converted into liquid and gaseous products (direct coal liquefaction). Details of the chemical fundamentals, types of process and reaction techniques are given in [350]; the use of catalysts is described in [351]. The reaction is catalyzed by iron compounds (sulfides or oxides), molybdenum, cobalt and tin or even mineral clays. Catalysts which can be cheaply disposed of are especially favored, but also highly-active cobalt – molybdenum carrier catalysts are being investigated.

Hydrogen can either react directly (in its molecular form) with coal (direct hydrogenation) or it can be transferred by means of hydrogen-carrying solvents (donor solvent coal liquefaction or hydrogenating extration) (→ Coal Liquefaction, Chap. 3.9.4). This type of process with chemically bound hydrogen can be carried out in the presence of an additional amount of molecular hydrogen and is known as short hydrogenation, the product being primarily bitumen or solvent-refined coal (SRC).

Hydrogen is required for the important process stages, such as hydrogenative cracking in the slurry phase (feedstock slurries of hard coal, lignite or coal extract), cracking and refining hydrogenation in mixed phases (feedstock hydrogenation residues, tars) and for cracking and refining hydrogenation in the gas phase (feedstock middle distillates and bottom cuts). Donor solvent processes employ external, catalytical

Table 39. Feed and product characteristics and process parameters of various hydrogenation processes during hydroprocessing

	Unionfining (UNOCAL)	Go-Fining (Exxon)	Hydroconverting (Linde)	Hydrocracking (BASF/IFP)
Feed	virgin kerosine	arabian heavy VGO [a]	VGO [a]	arabian light VGO [a]
Density, g/cm^3	0.806	0.933	0.910	0.909
Boiling range, °C	160 – 240	370 – 560	340 – 550	370 – 475
Sulfur content, wt %	0.4	2.96	2.7	2.55
Processing conditions				
Reactor stages	1	1	1	2 (for max. gasoline production)
Pressure, MPa	2.5 – 6.0		5.8	moderate
Temperature, °C	340		395	400°/400 °C
Hydrogen consumption, m^3/t	10	87	150	390
Products				
Yields, wt %	naphtha, 1 %	LPG, 0.4 %	LPG + gasoline, 39 %	C_4-, 15.6 % light gasoline, 23.8 %
	destillate, 99 %	gasoline, 0.8 %	middle distillate, 28 %	heavy gasoline, 61.3 %
		middle distillate, 100.6 %	residues, 33 %	$H_2S + NH_3$, 2.8 %
Main product				
Density, g/cm^3		0.890	0.813	0.664/0.758
Boiling range, °C	163/240	>200		
Sulfur content, wt %	0.01	0.1	0.2	
RON [b] of gasoline fraction			>88	86

[a] VGO = vacuum gas oil.
[b] RON = research octane number.

or noncatalytical hydrogenation of the recycled solvent.

Hydrogen Consumption and Product Range. The products obtained range from small quantities of coal residue over heavy and middle distillates and gasoline to gases. The boiling range of the hydrocarbon products depends on the quantity of hydrogen. This is shown in Figure 99 for hydrogenation in the slurry phase. Hydrogen consumption per tonne of dry coal for the catalytic direct coal hydrogenation amounts to ca. 1000 m^3.

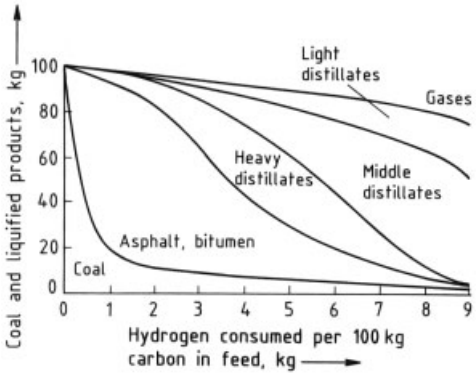

Figure 99. Relation of hydrogen consumption and product distribution during slurry-phase hydrogenation of coal

Hydrogen Production, Recycle Gas Separation. In all coal hydrogenation processes nonreacted hydrogen must be recovered and recycled back to the reaction together with fresh make-up hydrogen. The economics of the projected large-scale processes for direct hydrogenation depend not only on the further improvement of the hydrogenation stage (milder hydrogenating conditions, improved liquid product yields) but in particular on:

improved separation of the gaseous hydrogenation products with complete recycle of hydrogen with an acceptable purity (inert components decrease the partial pressure of the hydrogen) and
low-cost production of the make-up hydrogen using improved and integrated processes for steam reforming and partial oxidation of byproducts of the coal hydrogenation, which are otherwise difficult to utilize.

Process Developments. After the oil embargo of 1973, many developments were revived. The developments being furthered in the Federal Republic of Germany are based to a great extent on the *modified IG process.*

Two plants on a pilot scale (6 t/d and 200 t/d) have been erected. In the United States, on the other hand, the process concepts being pursued involve new process steps, e.g., SRC 1, SRC 2 (Gulf Oil), Exxon Donor Solvent Process, H-coal process (Hydrocarbon Research). An overview is given in [352]. Improved two-stage processes are finding increasing attention, for example in Japan [353].

Hydropyrolysis. In this process coal is subjected to high temperatures (700 – 1000 °C) for short residence times in the presence of hydrogen and thereby thermally cleaved and partially hydrogenated (flash pyrolysis). The hydrogen consumption of 200 – 300 m^3 per tonne of coal is relatively low and 25 – 45 % liquid hydrocarbons are obtained; about half of the feedstock coal is recovered in the form of a low-sulfur residue coke [354].

Hydrogasification of Coal. In hydrogasification processes, coal is converted in the presence of hydrogen and/or steam in one stage or in a series of stages directly to methane. The aim of many process developments is the production of SNG.

The basis is the strongly exothermic reaction of hydrogen with carbon according to (greatly simplified):

$$C_{(coal)} + 2\,H_2 \rightarrow CH_4;\ \Delta H_0 = -87.4\,kJ/mol$$

Equilibrium data are given in [350]. The equilibrium yield of methane is increased at high pressure and low temperature. Table 40 shows calculated methane concentrations at equilibrium. The reaction sequence is a combination of the rapid hydrogenating gasification of the organic components in the coal and the slow heterogeneous gas – solid reaction between semicoke or coke residue and molecular hydrogen. The reaction occurs relatively slowly in the temperature range of 700 – 1300 °C; the technically feasible operating conditions are nowadays considered to be between 800 and 900 °C and 4.0 – 10.0 MPa. The multiphase reaction must be conducted in a fluidized bed and, because of the short residence times resulting, gas recycle processes must be used.

Most important for the economics are the hydrogen production costs. The overall methane yield per kilogram of carbon depends in particular on the process used to produce hydrogen:

hydrogen from the coal feedstock, autothermal	0.6 m^3 (STP) CH_4 per kilogram of carbon
hydrogen from recycle methane, allothermal	1 m^3 (STP) CH_4 per kilogram of carbon
hydrogen from external sources, e.g., water electrolysis	1.8 m^3 (STP) CH_4 per kilogram of carbon

Table 40. Methane concentrations of the carbon hydrogenation reaction at equilibrium

Temperature, °C	Pressure, MPa	CH_4 content, vol %
800	1	26
	10	63
	100	87
1000	1	8
	10	37
	100	72

Examples. The process developed by *Union Rheinische Braunkohlenkraftstoff AG* operates in a fluidized bed at 800 – 1000 °C and 5.5 – 9.5 MPa (data from the pilot plant operation). The crude gas obtained contains up to 40 % methane; the degree of gasification is ca. 82 %. For hydrogen production the residue coke is gasified in a High-Temperature Winkler (HTW) gasifier [355].

Hygas process (Institute of Gas Technology, United States): Hydrogen is produced from the residue coke in the lower part of a multistage reactor.

The *Hydrane process* (Bureau of Mines, United States) uses a two-stage gasifier with external hydrogen production from residue cokes, oxygen and steam.

8.1.4. Synthesis Gas

The process for the production of hydrogen from hydrocarbons yields gas mixtures containing mainly hydrogen and carbon monoxide (see Section 4.1). Such gases are named synthesis gases since they are used for the synthesis of special chemical products. Some hydrogen – carbon monoxide combinations (because of the production method or the final use) have the designation water gas, cracked gas, methanol synthesis gas or oxo-synthesis gas. The fundamental

reactions of synthesis gas chemistry are methanol synthesis, Fischer – Tropsch synthesis, oxo synthesis (hydroformylation), and methane synthesis; further synthesis gas reactions are being developed. Excellent overviews are given in [356][357][358].

Methanol Synthesis. Methanol can be produced from hydrogen – carbon oxide mixtures by means of the catalytic reaction of carbon monoxide and some carbon dioxide with hydrogen. Methanol may be considered virtually as synthesis gas at maximum compression.

$$CO + 2\,H_2 \rightleftharpoons CH_3OH \quad \Delta H^0 = -90.84\,kJ/mol$$

$$CO_2 + 3\,H_2 \rightleftharpoons CH_3OH + H_2O \quad \Delta H^0 = -49.6\,kJ/mol$$

The presence of a certain amount of carbon dioxide in the percentage range is necessary to optimize the reaction. Side reactions, also strongly exothermic, can lead to formation of byproducts such as methane, higher alcohols, or dimethylether.

2520 m^3 (STP) of synthesis gas (70 % H_2, 21 % CO, 7 % CO_2) are necessary to produce a tonne of methanol. The purity of the latter depends on the catalyst used. Copper – zinc catalysts used in the low-pressure process require a sulfur-free gas (H_2S <1 ppm [mL/m^3]). Catalysts for the high- and medium-pressure processes (ZnO activated with chromic acid) can accept 30 ppm (mL/m^3) of hydrogen sulfide. For details on the process schemes, catalysts, process techniques, economics, etc. see, for example, [360].

Fischer – Tropsch Synthesis. Hydrogen – carbon monoxide mixtures react to hydrocarbons according to reaction equations (58) – (62), (60) is the main secondary reaction. An example for one of the general equations for alkane synthesis is (63), for olefin synthesis (64). The overall reaction balance including synthesis gas formation corresponds to an indirect coal hydrogenation.

$$CO + 2\,H_2 \rightarrow -CH_2- + H_2O \quad \Delta H^0 = -165.0\,kJ/mol \tag{58}$$

$$2\,CO + H_2 \rightarrow -CH_2- + CO_2 \quad \Delta H^0 = -204.7\,kJ/mol \tag{59}$$

$$CO + H_2O \rightarrow H_2 + CO_2 \quad \Delta H^0 = -39.8\,kJ/mol \tag{60}$$

$$3\,CO + H_2O \rightarrow -CH_2- + 2\,CO_2 \quad \Delta H^0 = -244.5\,kJ/mol \tag{61}$$

$$CO_2 + 3\,H_2 \rightarrow -CH_2- + 2\,H_2O \quad \Delta H^0 = -125.2\,kJ/mol \tag{62}$$

$$n\,CO + (2n+1)\,H_2 \rightarrow C_nH_{2n+2} + n\,H_2O \tag{63}$$

$$n\,CO + 2\,n\,H_2 \rightarrow C_nH_{2n} + n\,H_2O \tag{64}$$

The Fischer – Tropsch synthesis is strongly exothermic. The total heat of reaction amounts to ca. 25 % of the heat of combustion of the synthesis gas. Undesirable side reactions include methanation, the Boudouard reaction, coke deposition, oxidation of the catalyst, or carbide formation. Other competing reactions such as alcohol, aldehyde, ketone, carbonic acid, and ester formation, also occur.

For development of the process, kinetics, thermodynamics and mechanism of the reactions, distribution of the products, etc., see → Coal Liquefaction and [359 – 362]. Up to 1954 4 000 publications and 4 020 patents regarding Fischer – Tropsch catalysts had already been reported [363], but virtually only those based on cobalt and iron have been successful.

The yield of the Fischer – Tropsch synthesis is determined by the initial hydrogen – carbon monoxide ratio and the stoichiometric requirements of the desired reaction products. The maximum yield is obtained when the aforementioned are nearly equal and thus yield 208.5 g hydrocarbon from 1 m^3 (STP) of synthesis gas; technically ratios of 1.7 : 1 to 3 : 1 are used.

The Fischer – Tropsch synthesis is used on a technical scale nowadays only in South Africa at SASOL. At SASOL I, five units of the ARGE reactor of the Ruhrchemie – Lurgi (gas phase, fixed bed reactors, 2.3 – 2.5 MPa, 220 – 250 °C, 40 m^3 Fe – Cu – K_2O – SiO_2 catalyst, 9 – 12 months running time) and three reactors using the Synthol circulating fluidized bed of Kellogg – SASOL (gas phase, 2.0 – 2.3 MPa, 300 –340 °C, 30 – 140 t Fe catalyst produced by reduction of magnetite; running time 45 d) are in operation. At SASOL II (start-up 1980) and SASOL III (start-up 1982) only the more flexible Synthol process is used. The enormous

gas amounts ($2\times1\,650\,000\ m^3$ [STP]/h raw gas, $2\times1\,000\,000\ m^3$ [STP]/h feed gas) make the recovery of byproducts (ethylene, alcohols esters, carbonic acids, etc.) economically worthwhile [364].

Variations of the Fischer – Tropsch synthesis with other selective catalysts can lead to the following products:

low-molecular-mass olefins (C_2 – C_4, mostly ethylene) [365, 366]
medium- and long-chain olefins [366]
polyethylene [367]

Polyethylene is obtained at high pressures (100 – 200 MPa), low temperature (100 – 120 °C), and using a ruthenium-based catalyst.

Methane Synthesis. The catalytic hydrogenation of carbon monoxide to methane is strongly exothermic

$$CO+3\,H_2\rightarrow CH_4+H_2O\ \Delta H=-206.4\,kJ/mol$$

Consecutive and side reactions (shift conversion, Boudouard equilibrium, hydrogenation of carbon) make the calculation of equilibrium conditions very complex. The influence of the feed gas composition and operating parameters on the equilibrium composition of the product gas and the kinetic data, which are somewhat contradictory, are summarized in [368].

Classical methanation catalysts are magnesium-promoted nickel catalysts with diatomaceous earth as carrier. Catalyst developments are aimed at increasing the thermal and mechanical stability and yielding catalysts which are simultaneously suitable for the cracking of naphtha with subsequent methanation. Methanation is technically important as a catalytic purification step for the removal of carbon monoxide from gases (see Section 5.3).

Hydroformylation of Olefins. Hydroformylation, also called oxo synthesis or Roelen reaction (O. Roelen, 1938), is a commercial-scale process for the production of aldehydes. By catalytic addition of hydrogen and carbon monoxide to an olefin an aldehyde is obtained under chain elongation

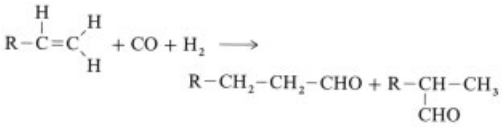

Hydroformylation is generally an exothermic, homogeneously catalyzed liquid-phase reaction of the olefin with hydrogen and carbon monoxide. As catalyst cobalt carbonyl hydride or, in some variations of the oxo-synthesis, cobalt- or rhodium-phosphin complexes are used.

Propen is the olefin mostly used. The oxo-products are converted to alcohols, carboxylic acids, aldol-condensation products, and primary amines. About 20 commercial processes are state of the art. An excellent review is given in [369] (see → Oxo Synthesis).

Homologation. Under the reaction conditions of the hydroformylation alcohols and aldehydes react with carbon monoxide – hydrogen under elongation of the chain by one CH_2- unit

$$R-CH_2-OH+CO/H_2\rightarrow R-CH_2-CH_2-OH+H_2O$$

Homologation has been performed with a number of alcohols, the production of ethanol from methanol has been most intensively investigated. The homologation is not used industrially because of the many side reactions which take place [370].

Synthesis Gas as Chemical Feedstock. Hydrogen – carbon monoxide mixtures, hydrogen alone, and their primary product methanol are important feedstocks for the chemical industry. Nowadays, ethylene which is produced from propane, ethane, naphtha, or gas oil is the most important feedstock for the production of industrial organic chemicals in the chemical industry. Bascially, it is, however, possible to obtain these compounds from synthesis gas thus changing the feedstock basis to coal (see Fig. 100).

8.1.5. Hydrogen in Organic Synthesis

Hydrogen is required for the production of chemicals and intermediates in organic chemistry. A large number of hydrogenations or reductions are carried out on a technical scale (→ Hydrogenation and Dehydrogenation).

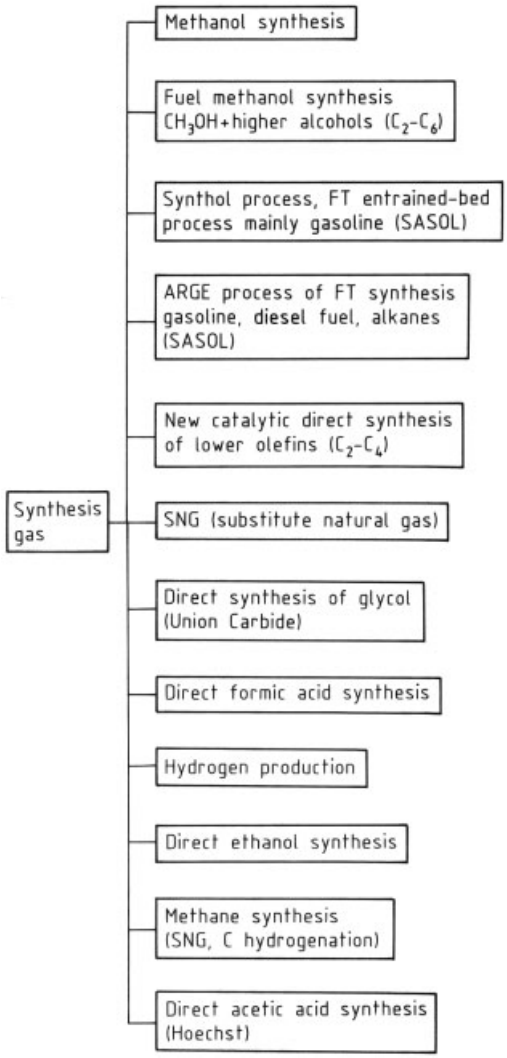

Figure 100. Synthesis gas as feedstock in the chemical industry

Activated and nonactivated double and triple bonds in olefins and acetylenes can be easily partially or totally hydrogenated, whereas the hydrogenation of aromatic and heterocyclic bonds requires more energetic conditions. Functional groups, such as carbonyl, nitro, nitroso, and nitrile groups, can also be hydrogenated.

The reaction conditions are dictated by equilibrium (65). The reactions are exothermal and run in the presence of a catalyst.

$$A + nH_2 \rightarrow BH_{2n} \qquad (65)$$

Directions for carrying out catalytic hydrogenations on a laboratory or industrial scale are given in [371]. Summaries of hydrogenation reactions are given in [372] and [373]. Hydrogenation catalysts are metals of groups 8 – 10 of the periodic system (see front matter of this volume), e.g., Raney nickel, as well as copper and molybdenum. In particular the noble metals (Pt, Pd), are highly-active catalysts [374]. Homogeneous systems with molecularly dispersed catalysts in the solution, can be used for special synthesis problems (selective hydrogenation, asymmetric synthesis) but are at present of no great importance in commercial areas because of the frequently encountered difficulty to remove the catalyst from the reaction mixture. Table 41 gives an overview of commercially used hydrogenation reactions.

High-purity hydrogen is necessary for the partial or total hydrogenation of fats and oils (for the production of edible fats or for technical purposes). In fat hydrogenation the polyene, triene, and diene fatty acids in their glyceride form are selectively hydrogenated to the corresponding monoene acids.

The industrial production of sugar alcohols, such as sorbitol, xylitol or mannitol from the corresponding sugars is carried out by catalytic hydrogenation. Batch suspension processes using Raney nickel catalysts are mainly employed under reaction conditions of 120 – 150 °C and 3 – 7 MPa [375].

8.1.6. Hydrogen in Inorganic Synthesis

The catalytic hydrogenation of anthraquinone and its derivatives followed by their autoxidation to yield hydrogen peroxide is the basis of the commercially important process for hydrogen peroxide production (→ Hydrogen Peroxide, Chap. 4.1). Further important reactions in inorganic chemistry are the production of hydrochloric acid from hydrogen and chlorine (→ Hydrochloric Acid) and the hydroxylamine synthesis (→ Hydroxylamine).

8.2. Hydrogen in Metallurgy

Iron Metallurgy. To reduce iron ore, apart from coke (classical blast furnace process), other

Table 41. Selection of important industrial hydrogenation reactions

Reaction	Product	Process features	Uses
Hydrogenation of unsaturated hydrocarbons and aromatics			
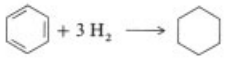	cyclohexane	middle pressure hydrogenation over Ni-/Pt-Li-Al_2O_3 catalyst in liquid phase (IFP, Mitsubishi) gas phase (UOP, DSM, Thoray, Houdry)	starting material for nylon production (cyclohexanone/ol, adipic acid, caprolactam), solvent
(analogous: cyclohexanol from phenol, cyclohexane carboxylic acid from benzoic acid)			
$CN-CH_2-CH=CH-CH_2-CN + H_2 \longrightarrow CN-(CH_2)_4-CN$	adiponitrile	Du Pont (300 °C), liquid phase hydrogenation 25–30 MPa/70–100 °C over Raney nickel	hexanediamine
$OH-CH_2-C\equiv C-CH_2OH + 2H_2 \longrightarrow OH-(CH_2)_4-OH$	butanediol	trickle bed, 20 MPa, 180–200 °C Ni catalyst with Cu-, Cr-promotors	polyesters, polyurethane-plasticizer component, solvent
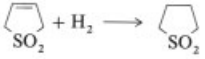	sulfolane	Shell process, 11 000 t/a	aromatics extraction solvents, sour gas, scrubbing agent
Selective hydrogenation as purification step during production of ethylene, propene, and butadiene			
Further processing of oxo-products			
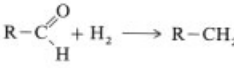	oxo-alcohols	gas phase hydrogenation at 2–0.3 MPa/115 °C, Ni catalyst sump phase hydrogenation, 8 MPa/115 °C Ni catalyst	components for solvents, plasticizers, detergents
(analogous: ethylhexanol from ethylhexanal)			
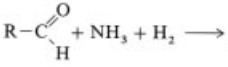	primary amines	hydrogenation (up to 30 MPa, 25–130 °C), Raney nickel catalyst	
Hydrogenation of other ketones and aldehydes			
Maleic acid $\longrightarrow$ butyrolactone $\longrightarrow$ $OH-(CH_2)_4-OH$	butanediol	Mitsubishi, Kao Ind. (Japan) process	
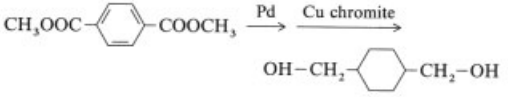	bis-(hydroxymethyl)-cyclohexane	two step Eastman-Kodak process	

Table 41. (continued)

Reaction	Product	Process features	Uses
$CH_2=CH-C(=O)H + H_2 \longrightarrow CH_2=CH-CH_2OH$	allylalcohol	Degussa gas phase process (heterogenous catalysis)	starting material for glycerol, glycidol
2 Acetone $\longrightarrow$ mesityl oxide $\xrightarrow{\text{Pd zeolite}}$ $i\text{-Bu}-C(=O)-CH_3$	MIBK	hydrogenation at Pt–zeolites (modified one step processes)	(extraction) solvent
Fats, oils + $H_2 \longrightarrow R-CH_2-OH$	fatty alcohols	20–40 MPa/200–400 °C, catalysts of Adkins-type	
$R-O-CH_2CH_2-OH + HCHO + H_2 \longrightarrow R-O-CH_2CH_2-OCH_3$	polyethylene-glycol ethers	new Hoechst process	sour gas scrubbing agent (Selexol)
Hydrogenation of N-compounds			
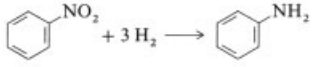	aniline	fixed bed hydrogenation over NiS/CuS, 300–475 °C (Bayer, Allied, Lonza), fluidized bed hydrogenation, 5 MPa/100 °C over Cu catalyst (BASF, Cyanamid)	starting material for dyes, pharmaceuticals, isocyanate polymers, solvents
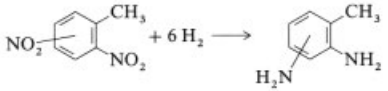	diaminotoluenes	analogous to nitrobenzene reduction	
Nitriles + H_2 → primary amines	hexanediamine	5–15 MPa/60–130 °C over Raney Ni or Raney Co	starting material for fibers, sour gas scrubbing agent
Miscellaneous reactions			
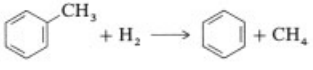	benzene	3–5 MPa/500–650 °C over $Cr_2O_3-Mo_2O_3-CoO$ catalyst (Houdry, UOP, Shell, BASF) 10–25 MPa/400–500 °C over $Pt-Al_2O_3-SiO_2$	50% of toluene production further processed to benzene
Xylene isomerization under H_2 partial pressure	o-/p-xylene	catalysts	terephthalic acid, phthalic acid

reducing agents can be used. For reduction a gas containing hydrogen, carbon monoxide, or mixtures of these is suitable. The reduction gas is produced by steam reforming or partial oxidation of fossil fuels. These *"direct reduction"* processes (→ Iron, Chap. 2) yield sponge iron, which can be melted to give crude iron which is further processed to steel.

The leading direct reduction technologies are the Midrex, the HyL I, and the HyL III process with 90 % of the total capacity [376]. The hydrogen content of the reducing gas is ca. 40 – 65 vol % (Midrex, shaft furnace) and 75 vol % (HyL III, retorts). To fully utilize the reduction potential of the gas, carbon dioxide and water vapor are removed and the gas is recycled.

The use of *pure hydrogen* has advantages with respect to the reaction time, the degree of reduction and the texture of the reduced pellets [377], but the carbidizing reaction necessary for steel production cannot take place, so that reduction with pure hydrogen has not been able to establish itself.

Nonferrous Metallurgy. Hydrogen is employed as reducing agent and as utility in some powder metallurgy production processes. Table 42 shows the use of hydrogen during the production and handling of various nonferrous metals.

For recovery of copper from its sulfidic ores reduction with hydrogen in the presence of calcium oxide has been suggested [378]. The thermodynamically unfavorable position of the hydrogen reduction reaction on metal sulfides is improved by the removal of the developing hydrogen sulfide (as CaS) from the equilibrium mixture.

8.3. Other Uses

Use of the High Temperature of the Oxyhydrogen Flame. The combustion of a stoichiometrical hydrogen – oxygen mixture leads to flame temperatures in the range of 3000 – 3500 K. Such flames can be used for:

Cutting and autogenous welding in the metal industry.

Growing synthetic crystals (saphires, rubies) by melting aluminum oxide doped with the appropiate metal oxides.

Production and handling of quartz glass (melting of rock crystals).

A process for the production of olefins from hydrocarbons is described [379]. The hydrocarbon to be cracked is atomized and fed into a 1000 – 2000 °C hot gas stream of hydrogen and steam, which is produced in a prereactor by combustion of excess hydrogen in oxygen. High olefin yields are reported to be possible even from heavy hydrocarbons.

Hydrogen Plasma as a Heating Agent. A further temperature increase by using the free energy of the hydrogen combustion reaction is hindered by strongly endothermic processes, such as the onset of molecule dissociation and ionization of the atoms. Higher temperatures can be reached in a plasma gas produced by means of an electric arc or a high-frequency field. Hydrogen dissociates around 5000 K into hydrogen-atoms, which start to ionize to H^+ at 9000 K; the recombination of ions to atoms or of atoms to molecules produces a great amount of heat. The heat content of hydrogen plasma is used in some processes for the production of acetylene from hydrocarbons (see Section 4.1; → Acetylene, Chap. 4.3.3). Hydrogen plasma has advantages compared to ordinary electric arc pyrolysis, for example, much lower carbon formation.

Hydrogen in Metal Processing. The high temperature of the plasma stream is used for plasma welding and cutting. The addition of hydrogen to plasma argon (2 – 15 vol %) increases the temperature and the cutting velocity. This process is used principally for cutting or welding high-alloy steels. Forming gas, a gas mixture of 8 – 20 % hydrogen and nitrogen, prevents the oxidation at the far side of the weld (root cut), e.g., when pipes are being welded.

In the thermal atomization technique for the production of surface layers, a plasma jet is used to spray high-temperature melting metals, their oxides, borides, etc. As plasma gas hydrogen, hydrogen – nitrogen or hydrogen – argon mixtures can be used.

Heat treatment of metals (annealing, sintering, melting) requires the presence of an inert atmosphere. A mixture of nitrogen with hydrogen is usually used. Hydrogen alone can decrease the annealing time by 30 % because of its higher heat

Table 42. Use of hydrogen in the nonferrous metallurgy

Metal	Unit operation	Product
Copper	reduction of copper salt solutions under pressure	Cu powder
Nickel	selective reduction during cobalt production	Ni powder
Cobalt	reduction of aqueous cobalt salt solutions under pressure (4 MPa, 175 °C)	Co powder
Molybdenum, tungsten	reduction of the oxides or molybdates and tungstenates	Mo, W powder
Tantalum	reduction of tantalum chloride, $TaCl_5$, in hydrogen plasma	Ta hydride, Ta powder
Germanium	reduction of germanium tetroxide, GeO_4, at 650 °C	Ge powder for further processing in zone melting
Uranium	reduction of the higher uranium oxides at 650 °C	UO_2

conductivity and the shorter reaction times for the reduction of oxide layers [380]. Mixtures of nitrogen, hydrocarbons, and hydrogen are used for nitriding and carbonizing annealing.

During the production of plate glass by the float glass process, a protective nitrogen – hydrogen atmosphere is employed to keep the metal melt surface free of oxides.

Semiconductor Technology. For the production of doped semiconductors, traces of the elements in the form of the corresponding hydrides (SiH_4, AsH_3, GeH_4) are mixed with a high-purity hydrogen stream in the required concentration and deposited by thermal decomposition on a silicon carrier.

Water Treatment. In potable water, unduly high nitrate contents can be lowered by denitrification with hydrogen-oxidizing bacteria in bioreactors. Hydrogen, dissolved at 0.4 – 0.6 MPa, is used as an energy supply for the biomass [381]. For the treatment of boiler feed and process water, dissolved oxygen can be removed by conversion with hydrogen in the presence of palladium-doped exchange resins.

Other Uses. Hydrogen is also used for the following purposes: as alloying element in metals to produce required chemical properties, and to increase the transition temperature of superconducting alloys, as well as carrier and fuel gas in gas chromatography (flame ionization detector). Liquid hydrogen is used as a refrigerant, e.g., in bubble chambers [382] and for cooling of superconducting metals below the transition temperatures.

9. Hydrogen Energy

Rev. William Cecil of Cambridge, England, is the first person reported to have suggested using hydrogen in an engine in 1820. In 1874, Jules Verne described in one of his last books "the fuel to be used, once coal, ran out . . . – Water . . . but decomposed into its primitive elements . . . and decomposed, doubtless, by electricity." Unfortunately, he did not disclose any details on the nature of the primary energy source to split the water.

In the 1920s and the 1930s, a great number of scientists, especially J.B.S. Haldane in Scotland and R. Erren in Germany, described virtually every method of production, storage and application mentioned so far in today's hydrogen energy concept, e.g., electricity generation using wind turbines, electrolysis, hydrogen storage in liquid form, and utilization in fuel cells and aircrafts. More on the story of hydrogen energy in general can be found in [383].

9.1. Aims of the Hydrogen Energy Economy

Hydrogen is an energy carrier, an indirect source of energy, not a resource itself. In spite of this, hydrogen was at first foreseen as a substitute energy form, in particular to substitute coal, natural gas, oil, and any products derived from them.

The reserves of fossil energy, in particular oil, are limited. This led to the belief that hydrogen could soon be used economically as a substitute energy form. The economic viability of the energy carrier hydrogen is enhanced by price advantage in transport over large distances

(see Section 9.4.2) and the possibility of energy storage (see Section 9.3).

According to Figure 14, hydrogen for use as a universal energy carrier can be generated by using all possible primary energy sources. Coal, nuclear energy including fusion (although still undeveloped), and solar energy have been named.

In addition to economic reasons for the introduction of new energy sources and new energy carriers, ecological reasons are becoming increasingly important, for example:

The increasing carbon dioxide content of the atmosphere, caused by the use of fossil energy sources (Fig. 101) and other human activities such as destruction of the tropical rain forests are predicted to lead to extensive climatic changes, e.g., a slow warming up of the atmosphere and the oceans, and melting of pole caps [384, 386]. Because of the natural fluctuations in the climate this theory has not been proven beyond doubt. In particular, little is known about compensation effects.

Well-known scientists have been demanding for years (without success) that a "low-risk strategy" for the use of fossil resources should be followed [387]. The utilization of the energy carriers coal, oil (in the form of gasoline, diesel, kerosene, etc.) and natural gas leads to emissions of sulfur dioxide, nitrogen oxides and hydrocarbons. In Europe, this has already led to the destruction of extensive wooded areas and to damage of the rest of the forests. The use of hydrogen as an energy carrier coupled with suitable utilization techniques could become particularly important for environmental protection.

Hydrogen competes with the conventional energy carriers hydrocarbons (methane, LPG, gasoline, etc.), coal, and electric power.

Further energy carriers are those recovered from regenerable sources and from refuse: biogas, alcohols, and vegetable oils.

For the suitability of an energy carrier, the following aspects are important:

conversion efficiency of the primary energy carrier to the final use,
availability,
ease of storage,
safety, and
ecological and economic evaluation

The evaluation of the energy carriers for specific applications is given in Section 9.3, the safety aspect is treated in Section 7.7.

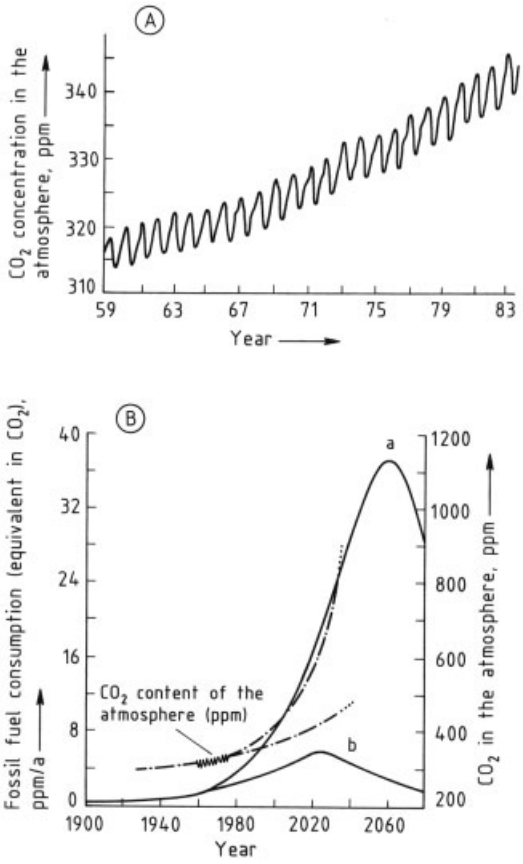

Figure 101. Actual and projected increase of the CO_2 content of the atmosphere, caused by human action, especially burning of hydrocarbons, coal, and wood
A) Measurements in Hawaii [385] from 1959 to 1983; B) Some projections extrapolating two scenarios of energy use
a) Maximum use; b) Optimum conservation of natural resources [384]

9.2. Production Systems for Hydrogen Energy

For use as a chemical reactant hydrogen is produced almost exclusively from hydrocarbons (see Table 11), because integration into the production processes and resulting overall plant economics are determining. A future hydrogen energy concept should be based on forms of energy which influence the environment as little

as possible. It should offer overall economic advantages and should be socially acceptable. This is the case with solar energy, used (1) directly in photovoltaic or solarthermic plants or in direct hydrogen production, (2) climatically induced energy gradients, e.g., wind, waves, heat, (3) indirectly via production of biomass (carbohydrates, plant oil, ethanol, etc.). As an intermediate solution for a limited transition period a combined utilization of fossil primary energy, nuclear energy and regenerable energy forms have been suggested.

Figure 14 gives a review of the principal possibilities of generating hydrogen from the primary energy sources solar energy, fossil fuels, nuclear and geothermal energy. In hydrogen energy scenarios, the economical and ecological aspects of the conversion of primary energy to the required energy form heat, power, light, etc., using hydrogen as energy carrier is investigated from the point of view of present technologies.

9.2.1. Energy Sources

Direct Solar Energy. Solar radiation can be directly used to produce hydrogen (see Section 4.4) by means of photochemical, photobiological or photoelectrochemical effects.

These methods, however, have up to now been only able to produce small amounts on a laboratory scale. The catalysts and the biomass tested have a short lifespan. Developments, especially in the area of basic research, are being followed up.

Thus, the short-term realization of projected hydrogen production systems is based on the indirect utilization of solar energy using photovoltaic cells (→ Photovoltaic Cells) with which electricity or, more exactly, electric voltage is produced. In addition, solar-thermal power stations, in which utilizable energy in the form of heat is developed, will become operable. In particular, the photovoltaic technology is already intensively utilized. Not only plants for power production, but also pilot hydrogen producing systems are already in operation or under construction.

Utilization of solar energy for photovoltaic power production is possible all over the world. The energy utilization factor in countries with high sunshine intensity (e.g., Sahara) is ca. 2.5 times higher than in the temperate climate zones (mid Europe) [388].

Those areas which are considered to be very good sites have a radiation energy > 2300 kWh/m^2 per year. If not only the high sunshine intensity, but also the geological suitability for setting up solar cell modules is considered, then ca. 6×10^5 km^2 are available worldwide; this is less than 0.5 % of the surface area of the globe. This area alone would be sufficient at a hydrogen production equivalent to 7000 tce/km^2 (tce = tons of coal equivalent, 1 tce $\triangleq 29.31\times10^9$ J) per year, to cover the world energy consumption [389]. But also other concepts which do not concentrate as much on the areas with high radiation intensity, but on installation of solar cells close to the user on free surfaces, e.g., the roofs of houses, are said to be sufficient for hydrogen production [390].

Indirect Solar Energy. Solar radiation leads indirectly to energy potentials on the earth; these have been used by mankind for thousands of years to produce energy.

Water power is utilized at sites distant from private industrial consumers to produce hydrogen for ammonia production (Norway, Egypt, India, etc.). Hydrogen is produced by means of alkaline electrolysis (see Section 4.2.1). An overview of the worldwide utilization of water power is given in [391] and, with respect to the utilization for hydrogen production, in [392]. According to this, the potential hydroenergy of 14 700 TWh/a worldwide is utilized at present to ca. 15 %. However, the greatest unused potential lies in zones far away from population and industry, such as the Arctic, Greenland, Alaska, Sibiria, or in the equator zones (Congo) [393]. About 30 % of the additional potential could be used for hydrogen production [392]. On the other hand, too great a utilization of the hydroenergy potential meets with ecological disapproval because of the destruction of the landscape by dam-building, flooding of large areas, destruction of forrests, etc.

Wind energy is used on islands to satisfy local energy requirements and to feed power into the grid. Pilot plants for the production of hydrogen already exist (see Section 9.4). The coastal regions are particularly suitable for the generation of wind energy. Areas with particularly high wind speeds and low energy requirements which

could be used for overregional production of hydrogen energy are Patagonia (South America), Somalia (Africa), and the Southwest Australian coast.

Biomass, Refuse, Wastewater. Hydrogen can be recovered from these substances by various methods.

The direct production of hydrogen by means of bacteria is possible; yields of up to 20 % have been attained (see Section 4.4.3). Other possibilities are the biological production of alcohols or methane from biomass or refuse by fermentation or other anaerobic processes. These substances can be converted by the methods described in Section 4.1 into hydrogen. Synthesis gases or hydrogen can be produced from biomass and refuse by pyrolysis or gasification processes analogous to those described for fossil feedstocks (see Section 4.1).

The hydrogen production potential from biomass, refuse, or wastewater is not considered to be very high for various reasons. Firstly, other valuable products and energy carriers, such as edible products, alcohol and methane, can be produced directly from the substances. Secondly, these sources are usually widely distributed, so that for a central industrial hydrogen economy the costs for transport and logistics would be very high.

Nuclear Energy and Other Energy Forms. Nuclear energy has also been suggested for the production of hydrogen [394, 395]. Various types of conventional and breeding reactors can supply power for hydrogen production, whereas the high-temperature reactor supplies heat for chemical reactions. The direct production of hydrogen by means of radiolysis (see Section 4.4.1) is an undesired accompanying phenomenon in pressure and boiling water reactors.

Other energy forms, such as *geothermal* or *tidal energy*, play a marginal role in the energy production. They need not be considered for the hydrogen energy concept.

A combined utilization of nuclear energy and fossil, nonconventional resources has been sugggested for the tar sands in Canada, for oil shale deposits in the United States, and for the heavy oil found in Venezuela. Hydrogen and steam are thereby cogenerated. Steam is used for the recovery of hydrocarbons and for processing, hydrogen is used for the hydrogenation of heavy oil.

9.2.2. Production Methods for the Energy Carrier Hydrogen

The conventional methods described in Sections 4.1 and 4.2 as well as Chapter 5 are available for the purification and production of hydrogen for the hydrogen energy scenario.

Purification Methods. The purification requirements for the hydrogen energy economy depend not so much on the planned utilization as on the hydrogen storage technique and transport (vectorization). The highest purity is necessary if hydrogen is liquefied, because all impurities, apart from helium, are deposited as solids and could block the liquefication equipment.

Storage and transportation in metal hydrides also place high requirements on the hydrogen purity, because most impurities lead to irreversible destruction of the storage material. Purity requirements are less for the direct combustion of hydrogen and the reaction with oxygen or air in fuel cells. All purity requirements can be met using conventional technologies, particularly adsorption (see Section 5.2).

Electrolysis. The most important hydrogen production method for the hydrogen energy scenario is electrolysis (see Section 4.2). Here, the energy carrier electricity is converted to the energy carrier hydrogen. Conventional electrolyses have a conversion efficiency of 80 – 85 %. Improved electrolyses are expected to have an efficiency of 88 – 94 % [396], which can hardly be increased further. In the high-temperature electrolyses at present under development, however, part of the energy necessary for the electrolysis can be supplied as thermal energy and it can therefore produce hydrogen with a higher efficiency than with solely an electrical supply.

The combination of regenerable energy forms, such as photovoltaic or wind energy with electrolysis units has undergone a long-term test in pilot projects (see Section 9.4). In addition, detailed system analyses have been made [397]:

- electrolysis and thermal solar power plants (power generator can be driven by steam or a Stirling motor),

electrolysis and thermal solar power plants, coupled with high-temperature electrolysis [398],
electrolysis and wind energy,
electrolysis and photovoltaic plants.

Particular problems with the electrolysis are caused by the fluctuating operation of the solar plant cycle at various times of the day as well as weather-dependent fluctuations of solar and wind energy.

Typical problems caused by *rapid* load changes:

degradation and destruction of diaphragm because of local overload,
corrosion caused by current leakages, and
deactivation of the electrode catalysts

Problems caused by *slower* (daily) changes:

cooling of the electrolysis module,
mixing of gas and electrolyte,
pressure equalization between cathode and anode, and
start-up and shut-down procedures including eventual prepolarization or blanketing.

Additional Methods of Hydrogen Production. Additional methods are:

1) Hydrogen production by means of thermochemical cycle processes using thermal energy (solar or nuclear energy)
2) Hydrogen production by *gasification* of refuse or biomass (for process principles see coal or heavy oil gasification, Section 4.1.2)
3) Hydrogen production by *pyrolysis* of refuse or biomass (for gas purification see coke oven gas treatment, Section 4.1.1).

For technical and economic reasons the aforementioned methods play only a small part in the production of hydrogen for energy systems.

9.3. Hydrogen-Energy Conversion Systems

For utilizing the energy contained in the secondary energy carrier hydrogen, numerous techniques are available, in the area of energy technology in industry and household, in power stations and in the transportation sector. Most of these are based on principles which have been known for a long time. Section 9.3 gives an overview of the state of the art and of present developments world-wide.

9.3.1. New Developments for Hydrogen Storage

The possibility to store hydrogen amounts to the possibility to store energy; this is the particular advantage of a secondary energy carrier. In addition to storage in the gaseous or liquid state (Section 7.4) there are numerous investigations or experimental applications of new processes for hydrogen storage in solids.

9.3.1.1. Cryoadsorption

Great quantities of gaseous hydrogen can be adsorbed on suitable adsorbents at medium pressure and low temperature. If the adsorber is cooled to 60 – 100 K and pressurized to ca. 4 MPa, the *average* hydrogen density on the active surface increases to values comparable to the density of liquid hydrogen. The *effective* storage density is, however, much smaller because part of the volume is taken up by the adsorbent and the pressure vessel; however, liquefaction can be avoided.

The process has been investigated experimentally [399, 400]. Only materials which are light and very porous, with a high specific surface or with a specifically activated surface can be used as adsorbing agents. Operating data for a cryoadsorption storage system on the basis of activated carbon bulk density 0.35 g/cm^3 are listed below:

Temperature range for isothermal operation	65 – 70 K
Charge-discharge pressures	0.2 – 4.2 MPa
Storage density of hydrogen (75 K and 4.2 MPa)	68 g H_2 per kilogram adsorbent
Maximum hydrogen storage density (65 K and 4.2 MPa)	82 g H_2 per kilogram adsorbent
Average mass related storage capacity	50 g H_2/kg
Average volume related storage capacity	15 g H_2/L

The economic range for the technical application will presumably be limited to medium-scale

storage with a specific storage capacity of 20 – 30 kWh/kW.

9.3.1.2. Hydride Technology

The capability of metals or metal alloys to reversibly store hydrogen in the form of hydrides has lead to a great number of investigations with respect to technical applications. The main areas are seen in the storage of hydrogen but also in the separation of hydrogen from gas mixtures, the purification of gases, and in storage and separation of hydrogen isotopes. An overview is given [401–404].

Physical Fundamentals. Ionic and metallic hydrides are formed (exothermic process) and decomposed (endothermic process) according to

$$y\mathrm{Me} + x\mathrm{H_2} \rightleftharpoons \mathrm{Me}_y\mathrm{H}_{2x}$$

The hydrogen absorption and hydride formation behavior can be described by pressure – composition isotherms (see Fig. 102 A) as follows. After catalytic dissociation of the hydrogen molecule some of the atoms lose their electron and occupy an interstitial position in the crystal structure of the host metal (solid solution, α-phase). As the hydrogen concentration is increased, local H – H interaction causes nucleation which induces growth of the hydride phase (β-phase). The two phases (α + β) coexist until, through further hydrogen uptake, the stoichiometric limit is reached. Here, the isotherms reach a plateau level (constant pressure) which is given the name 'dissociation plateau' or 'plateau pressure'. After the pure β-phase is reached, any further increase of the hydrogen : metal ratio requires a steep increase in hydrogen pressure. At higher hydrogen pressure further plateaus may be found because of the existence of other hydride phases (γ, δ, . . .).

On reducing the hydrogen pressure the process is run through in the reverse direction (desorption isotherm). Along the desorption plateau, the hydride phase decomposes into hydrogen-saturated metal and hydrogen gas. The decomposition process is endothermic. Absorption and desorption isotherms show a hysteresis effect. This is shown in Figure 102 B and C for $LaNi_5$ and FeTi [405, 406].

The plateau pressure p, which varies strongly with temperature, is connected with the formation or decomposition enthalpy by the Van't Hoff equation. The entropy term, ΔS^0, consists mainly of the standard entropy of gaseous hydrogen ($S^0[\mathrm{H_2^g}]$ = 130.6 J mol^{-1} K^{-1}), because the entropy of the hydrogen dissolved in the metal can be neglected.

$$-RT \ln p_{\mathrm{H_2}} = \Delta H - T\,\Delta S$$
$$\log p_{\mathrm{H_2}} = \frac{\Delta H}{19.14\,(T/1000)} + 6.82$$

This relationship can be illustrated graphically for all hydrides and for the corresponding hydride transition steps (hydride isochores) (see Fig. 103). Applications can be found in a temperature range from −30 – 300 °C and at pressures up to 10 MPa.

The heat evolved by the hydrogen – metal reaction depends on the type of hydride. It can amount to ca. 30 % of the heat of combustion of the absorbed hydrogen. To liberate hydrogen, at least the same amount of energy is required (see Table 43).

Intrinsic Properties of the Hydride-Forming Materials. To analyze the utilization possibilities of hydride-forming metals, some further properties, some of which are crucial, must be known. The overall kinetics of hydride formation, e.g., is governed by the intrinsic kinetics (dissociation, surface penetration, diffusion, phase transformation), heat flow, and mass flow. In particular, surfaces of *intermetallic compounds* containing transition metals accelerate the dissociation reaction, whereas thin *oxide layers* on the surfaces of elemental metals often block this. Easy hydrogen sorption is facilitated by surface segregation with continuous formation of reactive subsurfaces (self-activation). Addition of small quantities of transition elements, e.g., nickel, will always favor activation. Impurities in the hydrogen, such as carbon monoxide, hydrogen sulfide and sulfur dioxide slow down the *sorption rate* because of surface deactivation, whereas oxidizing impurities, such as oxygen and water, gradually *decrease the capacity* by reaction with the host compound. Such "poisoning" of the hydride material can in many cases by reversed by hydrogenation – dehydrogenation cycles with pure hydrogen at higher temperature.

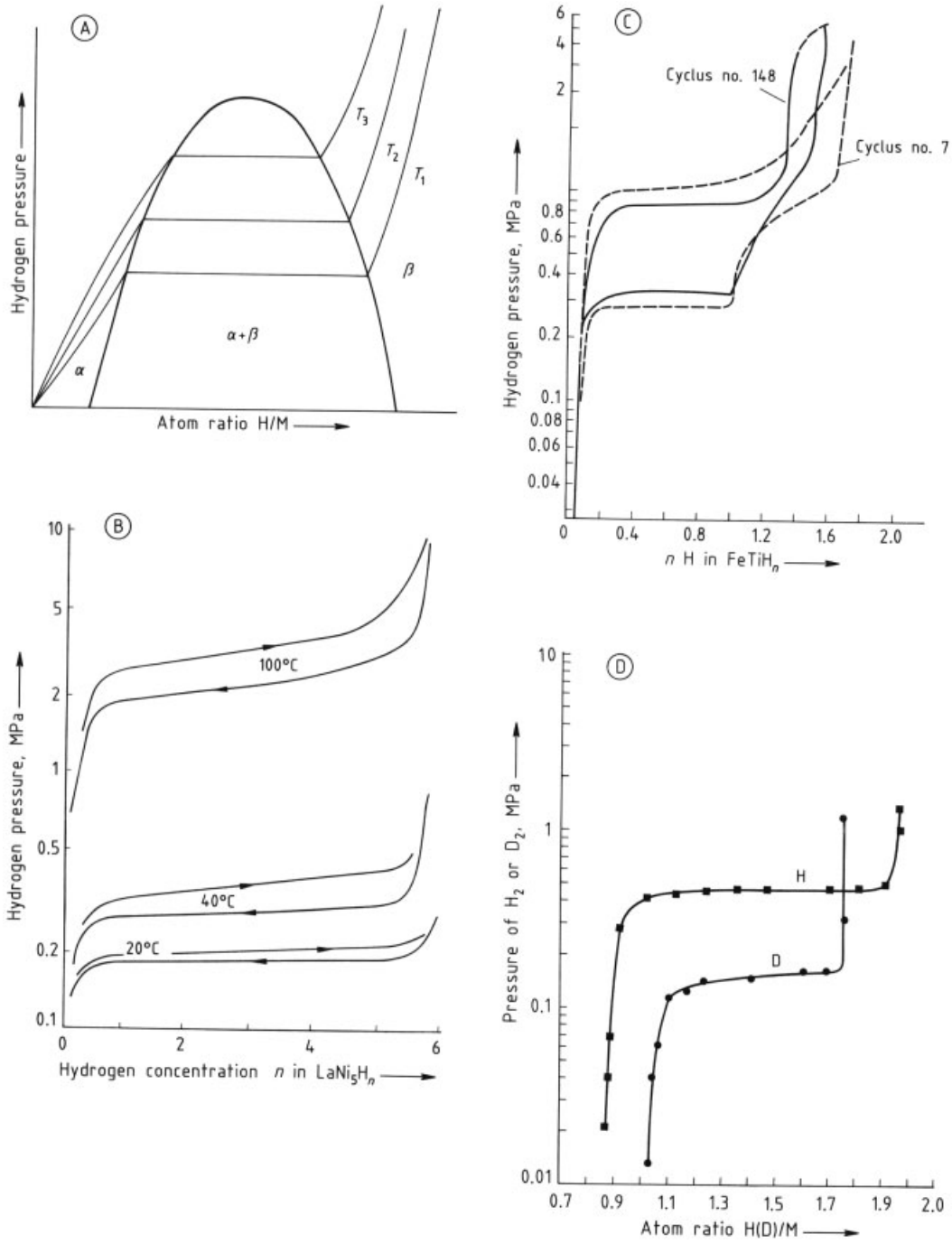

Figure 102. A) Ideal pressure-composition isotherms for a hydrogen-metal system
B) Absorption and dissociation isotherms of $LaNi_5$ hydride with hysteresis
C) Hysteresis loops of test cycles of FeTi at 25 °C. The plateau pressure of the monohydride stabilizes after ca. 20 cycles, whereas that of the dihydride formation is still rising
D) Pressure-composition isotherms of hydrogen and deuterium in zone-refined vanadium at 40 °C

Table 43. Comparison of the hydrogen absorption data of some metal – metal hydride systems

Hydride system	Heat of reaction, kJ per mole H_2	Plateau region [a]		Hydrogen content		Energy density,[c]
		pH_2, MPa	T, °C	wt %	g/mL [b]	kJ/g
Elemental metals						
$Mg - MgH_2$	77.4	0.1	286	7.7	0.107	9.9
$Ti - TiH_2$	124	0.1	650	4.0	0.15	5.7
$V - VH_2$		0.4	40	2.1	0.19	2.95
Alloys						
$Mg_2Ni - Mg_2NiH_4$	64.5	1.0	350	3.16	0.081	4.5
$FeTi - FeTiH_{1.95}$	31.4	0.5	30	1.72	0.096	2.5
$LaNi_5 - LaNi_2H_{5.9}$	30.2	0.5	60	1.37	0.089	1.95
$Ti_{0.98}Zr_{0.02}V_{0.43}Fe_{0.09}Cr_{0.05}Mn_{1.5}$		1.0	24	1.75	0.09	2.5
Liquid hydrogen for comparison						
LH_2				100	0.077	142

[a] At selected conditions, dissociation pressure at 50 % of H/Me ratio.
[b] Refers to volume of compact hydride material without voids.
[c] Refers to HHV of absorbed hydrogen

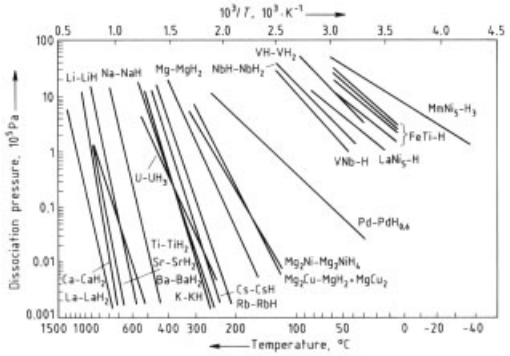

Figure 103. Hydride isochores for various metals and intermetallics. H_2-plateau dissociation pressure vs. 1/T
Mm denotes mischmetal, an inexpensive mixture of rare earths

Diffusion is normally not the rate-determining step because most of the hydride-forming materials disintegrate into powder with a grain size down to 1 μm.

Incorporation of the hydrogen into the lattice and the α/β-phase transition causes a deformation of the metal structure. The accompanying increase in volume can amount to 25 % and may lead to undesired distortion of the containing vessel.

Detailed analyses of the kinetics of hydride formation of $LaNi_5$ and MgNi are available [407]. For most hydride-forming systems using intermetallic compounds, heat transfer is rate-controlling. Sufficient heat transfer can be provided by adding inert metals (Cu, Al) or inert ceramic beads or by pressing the material into pellets to fit into heat exchanger tubes.

Hydride-Forming Materials. The criteria for selection of a material for a specific application are:

high adsorption capacity
suitable temperature and pressure range
sufficient exchange rate
long-term stability
long cycle life

In the temperature range from −20 – 400 °C the following groups of alloys are known:

− 20 – 100 °C
AB_2 alloys, e.g., $ZrMn_2$
AB_5 alloys, e.g., $LaNi_5$
FeTi-based alloys
300 – 400 °C
Mg and Mg-based alloys

Some metal – metal hydride systems and their important properties are summarized in Table 44. In recent years development has concentrated on cheaper multicomponent alloys and modeling materials to optimize uptake and storage parameters. About 10 different storage alloys are commercially available from producers in Europe, Japan and the United States at prices between $ 5 and 30 per kilogram.

Stationary Hydride Storage. For the stationary storage of hydrogen by using hydrides, FeTi or TiVFeMn alloys can be employed. A representative example for the many developments in this field is the hydride storage vessel of

Table 44. Hydrogen content of fuel gases and corresponding energy content

Fuel gases	H_2 content, %	HHV, kJ/m^3 (STP)	LHV, kJ/m^3 (STP)
Natural gas, rich gas	up to 12.5	25 000 – 39 800	35 800 (CH_4)
Town gas	40 – 60	16 700 – 20 000	
Coke oven gas	50 – 60	20 000 – 23 000	16 500 – 20 500
Water gas	50	10 500 – 12 200	10 700 – 11 700
Producer gas, blast furnace gas	2 – 5	4 300 – 4600	3 900 – 4700
Carbon monoxide		12 650	12 650
Hydrogen	100	12 760	10 800

Gesellschaft für Hydrid- und Wasserstofftechnik (HWT). Figure 104 shows a module which consists of a bundle of pressure vessels containing the powdered metal alloy between fins. A sintered metal filter prevents the loss of powder. The gas bundle is surrounded by the heat transfer medium, water. The essential operating data are:

hydrogen capacity	1700 – 2000 m^3 (STP)
active storage material	10 t
operating pressure	5 MPa
operating temperature	80 °C

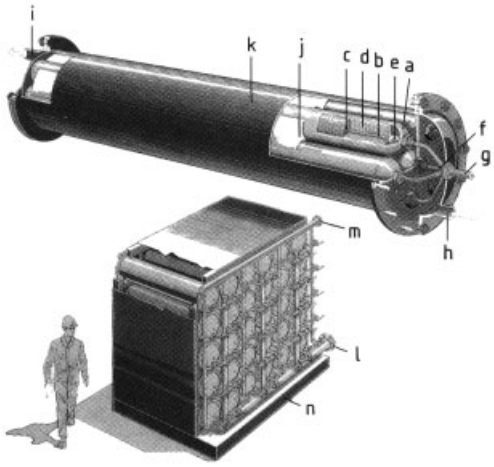

Figure 104. Hydride storage tank
a) Storage tube; b) H_2-guide tube; c) Lamella; d) Hydride; e) Filter (sintered metal); f) Gas-collecting tube; g) H_2 connection; h) Water inlet (module); i) Water outlet (module); j) Filling body; k) Shell; l) Water inlet (centr.); m) H_2 inlet/outlet (centr.); n) Container

Hydrogen used to fill the vessel should have at least 3.0 (99.9 %) purity. Hydrogen with a purity of 6.0 (max 1 ppm [mL/m^3] impurity) can be drawn off [408].

Mobile Hydride Storage. Possible applications for the hydride storage technology are mobile storage vessels for the laboratory or for hydrogen-fueled cars (see Section 9.3.3). Figure 105 shows a hydrogen laboratory storage vessel and the corresponding ab- and desorption curves. These vessels are available for hydrogen quantities of 1 – 5 m^3 [409]. In addition to the small space requirements, they offer further advantages such as safe handling, purification effect and availability at higher pressure levels.

The energy density of hydride storage systems, including the vessel material, is in the range of 300 Wh/kg for the so-called low-temperature hydrides.

Separation of Hydrogen Isotopes via Hydride Formation. Some metals and alloys (TiNi, Ti_2Ni, V) show considerable differences in the plateau pressure of their hydrides and deuterides (see Fig. 102 D). This can be used for the enrichment of deuterium in deuterium-containing hydrogen streams [410]. The recombination of H and D atoms can lead to the formation of HD. The separation of tritium over vanadium monohydride in a temperature-swing process has been described [411].

Purification of Gases. Hydride-forming materials can be used to purify hydrogen as well as noble gases. Various mechanisms are thereby involved: oxygen, carbon dioxide, and water are removed by the hydride material because of its getter properties. Carbon monoxide is converted to methane, which is more easily removed, whereas inert gas components, such as the noble gases, can be removed by a short purging step. The hydrogen, which can then be recovered from the hydride bed, has a purity of $>$7.0, i.e., impurities content $<$0.1 ppm (mL/m^3) (see Section 7.1).

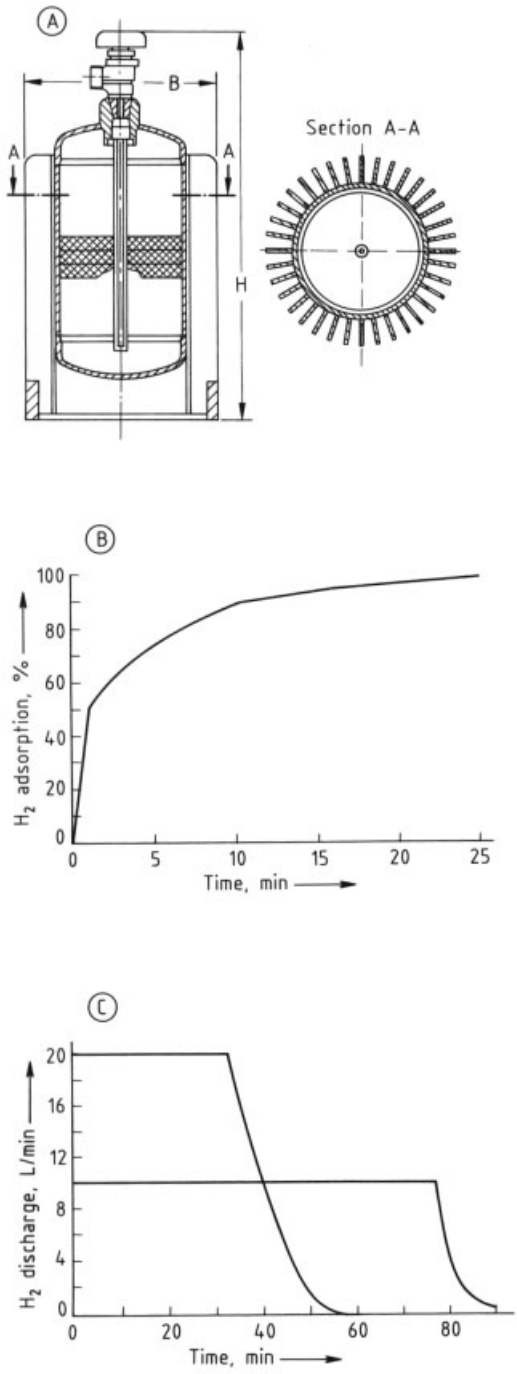

Figure 105. Hydrogen laboratory storage vessel and the pertaining adsorption and desorption curves
A) Schematic of a storage vessel; B) Loading at 0.5 MPa, water cooling at 20 °C; C) Unloading against 0.1 MPa, heat exchange medium is water at 80 °C

Hydrogen Recovery. The selective removal of hydrogen by means of hydride-forming metals can be used to separate hydrogen from a gas mixture. The feasibility of this method for recovery of hydrogen from the purge gas stream of an ammonia synthesis loop was demonstrated in a pilot plant. The unit operated with three absorber columns and produced hydrogen with a purity of 99 % and a recovery rate of 90 – 93 % of the hydrogen contained in the purge gas [412]. The process is adiabatic, the heat evolved during absorption is stored in the $LaNi_5$ hydride pellets, which contain a certain amount of ballast material. This stored heat is used for hydrogen desorption. The hydrogen uptake and liberation is pressure-controlled (adiabatic pressure-swing process). The complex dependency of the hydride bed lifetime on alloy type, trace components in the gas, poisons, and various combinations thereof has prevented commercial utilization until now [413].

Thermochemical Machines. Metal hydrides are promising materials for use in thermochemical machines such as heat pumps, heat transformers, refrigerators or hydrogen compressors. The principle is based on thermodynamic cycles in a closed system; a heat pump cycle is shown as an example in Figure 106. The equilibrium lines in the $\ln p - 1/T$ diagram are based on measurements of pressure – composition isotherms. The required heat output is assumed to be at 40 °C. Taking into account the different material imperfections (i.e., hysteresis, plateau slope) and the pressure drop necessary to drive the reaction, the level of the low-temperature heat source changes from 2.5 °C (ideal case) to 16.5 °C, while the level of the high-temperature source rises from 82 °C to 103 °C. An advantage is that hydrogen is handled in a closed loop without the risk of contamination. More than 10 developments are being followed up worldwide (United States, Federal Republic of Germany, Japan). The planned applications are in household heating, air-conditioning, refrigeration and power generation. The investigations concern reaction bed designs, flow of the heating or cooling media, heat transfer, etc., using fast-reacting alloys of $LaNi_5$, $LaNi_{4.9}Al_{0.1}$, FeTi for the low-temperature range and $CaNi_5$,

Mg_2Ni, $LaNi_{4.7}Al_{0.3}$ for the high-temperature range [414].

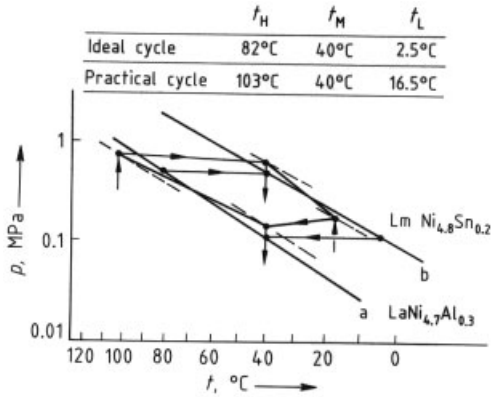

Figure 106. Thermodynamic cycle of a heat pump
a, b) Mean values of equilibrium lines for absorption and desorption
Dashed lines: pressures at end of plateau
Vertical arrows: inflow or outflow of heat
Horizontal arrows: transfer of hydrogen
($LmNi_{4.8}$ is a lanthanum-rich mischmetal)

Compression of Hydrogen. Hydrogen can be compressed thermally by absorption at low and desorption at higher temperature. A machine working on this principle as an open system with several stages is commercially available [415].

9.3.1.3. Liquid Organic Hydrogen Carriers

With the help of hydrogenation – dehydrogenation reactions it is possible to store hydrogen reversibly in a chemical compound. The combinations benzene – cyclohexane and toluene – methylcyclohexane have been investigated using noble metal – aluminum oxide carrier catalysts for the reversible reaction. Transportable hydrogenation – dehydrogenation systems operating at 380 – 500 °C and 1.1 MPa have been designed for a truck using hydrogen fuel; the necessary energy for the exothermic dehydrogenation reaction is taken from the exhaust gas of the engine. A specific energy density of 56 g hydrogen per liter liquid hydrocarbon is attained, but the weight of the necessary equipment must be taken into account [416].

The reversible uptake of hydrogen in liquid organic substances has also been suggested for transcontinental hydrogen transport. Existing facilities for gasoline could be used [417].

9.3.2. Combustion and Heating

The energy contained in the hydrogen can be released most simply by combustion with oxygen or with air. Characteristic combustion data are given in Chapter 2.

Hydrogen Content of Fuel Gases. Hydrogen mixtures have long been used in the form of town gas for heating purposes. Table 44 shows the hydrogen content of some fuel gases. The difference between LHV and HHV (condensation enthalpy of water formed during combustion) is greatest for pure hydrogen, because water is formed as the only product.

Emissions. Since only water is obtained as a product of the combustion, emissions, such as carbon monoxide, sulfur dioxide, incompletely combusted hydrocarbons, particles, soot, ash, which are obtained by combustion of fossil fuels, are avoided (see Section 9.2 for a discussion of the carbon dioxide problem). If hydrogen is burned in the presence of air, the high temperatures favor the formation of nitrogen oxides. The NO_x formation depends on the flame temperature and can be influenced by the value of excess air, λ. Figure 107 shows typical NO concentrations for a hydrogen – air flame. Maximum NO formation occurs in the range of the stoichiometric hydrogen – oxygen ratio, whereas under lean conditions (excess air) low nitric oxide concentrations may be attained [418].

Hydrogen Burners. Differences in combustion properties, i.e., flame speed and flame stability as well as density and heating value, make it necessary to use a different burner geometry when hydrogen or hydrogen-rich gases are to be burned. The flame speed of hydrogen – air mixtures is seven times higher than that of methane; the particular problem is therefore the flashback over a wide range of hydrogen – primary air mixtures.

The most important criteria for household burners are summarized, e.g., in [419]. The ratio of secondary to primary air must be increased, if hydrogen is used. Forced draft burners for

heating systems can be retrofitted by removal of the baffle plate and by shortening the ignition electrodes [420]. Industrial hydrogen burners are used for heat, steam, and electrical power production. The state of the art are premix burners or nozzle-mix burners with high mixture velocities. For supplying heat in certain industries (semiconductors, glass) the simultaneous presence of a reducing atmosphere is advantageous.

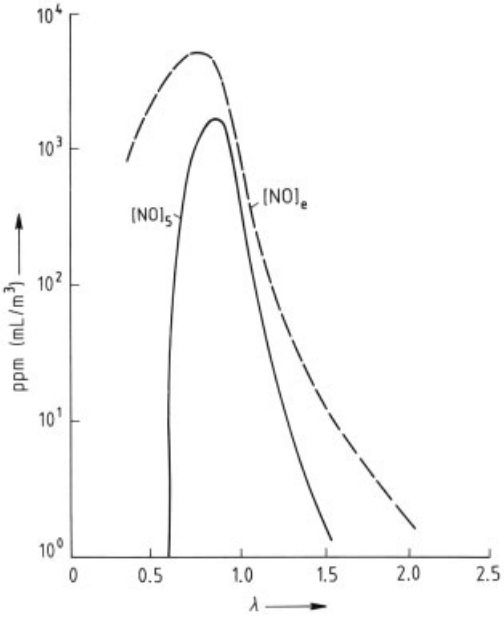

Figure 107. NO concentration resulting from hydrogen – air flames as a function of excess air value λ
($[NO]_e$ = equilibrium concentration; $[NO]_5$ = concentration behind flame front within 5 ms; p = 3.2 MPa)

Catalytic Combustion. The thermal energy of hydrogen can also be released by means of flameless catalytic combustion. Suitable catalysts, apart from platinum and palladium which initiate reaction at room temperatures, are metal oxides, such as $MnO_2 - CuO - Ag_2O$ (Hopcalite) or Co_3O_4. The surface can be enlarged accordingly by a suitable carrier material in the form of porous plates or honeycombs. Catalytic burners operate either on the diffusion principle or by premixing hydrogen with air. Figure 108 shows a catalytic diffusion burner. An overview of Japanese investigations is given [421].

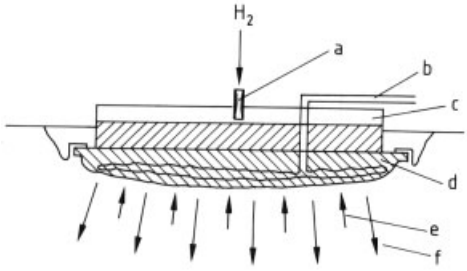

Figure 108. Catalytic diffusion burner
a) H_2 entrance port; b) Electric ignition wire; c) Distribution manifold; d) Catalytic combustion zone; e) Oxygen from air; f) Heat radiation

Catalytic heaters react very flexibly; the temperature can be adjusted and limited by means of the throughput; the heat is produced in the infrared range. The combustion is free of emissions. Since no stacks are required, almost 100 % of the heat set free can be utilized. In addition, the moisture content of the air can be regulated by the reaction product, water.

Transport to Small Consumers. Hydrogen could be distributed via present nets to industrial and household consumers and could substitute natural gas. The energy transport capacity of such a low-pressure network (ca. 10 kPa) leads to about the same heat flux for hydrogen as for natural gas.

9.3.3. Hydrogen Fuel Systems

In all sectors of transportation (space and aircraft propulsion, earthbound traffic systems including individual transport) the fuel systems hydrogen – air or hydrogen – oxygen can be used for the prime mover.

9.3.3.1. Hydrogen Propulsion Systems for Space

Because of the large specific enthalpy of combustion LH_2, combined with liquid oxygen (LOX), produces (apart from the system $LH_2 - LF_2$) the greatest specific impulse. Jet velocities up to 4500 m/s can be reached using combustion chamber pressures of 5 to 22 MPa.

The hydrogen – oxygen motor NASA Centaur (Pratt & Whitney) was used for the third

stage of the Atlas Centaur and the fourth stage of the Titan III rocket. For the Apollo project Rocketdyne motors were used for the second and third stage of the Saturn V [422]. The peak of the US development is the Space Shuttle main engine, a high-pressure motor with a combustion chamber pressure of 21.5 MPa.

The European Ariane carrier system uses LH_2 – LOX in its third stage. Using 10 t of this fuel combination, the HM7 motor develops a thrust of 60 kN over a period of 700 s. A further development for 800 kN thrust and a fuel requirement of 120 t with the designation HM60 is being developed [423].

9.3.3.2. Hydrogen as Aviation Fuel

In the future the following alternative aviation fuels will be available:

jet fuel "aviation grade" from coal (Synjet)
liquid methane (LCH_4)
liquid hydrogen (LH_2)

Liquid hydrogen has already been tested in 1957 in a B 57 Canberra by the NACA Lewis Research Center (Cleveland, Ohio) and its suitability as an aviation fuel was proven. Since 1973, especially in the United States, investigation of the use of LH_2 as an aviation fuel has been follwed up (overviews [424 – 426]). In 1988, test flights were made in the Soviet Union with a civil aircraft using LH_2 as fuel.

Hydrogen is suitable for turbines in the sub- and supersonic regions. Engine designs for turbines converted to hydrogen fuel have certain advantages: They are smaller, easier to control and have a longer lifetime than normal turbine fuels. The cryogenic fuel is used to cool engine oil and turbine cooling air, whereas the turbine core exhaust heats up the fuel before injection into the combustor. The savings in the specific fuel consumption amount to 8 %. Ecological benefits are the lower noise level, smaller emission of NO_x, and absence of CO, CO_2, and hydrocarbons.

The energy content related to volume and mass of LH_2 is the determining factor for the construction of a hydrogen aircraft. The four times greater fuel volume as compared to hydrocarbons for the same energy content and the cryogenic properties require a completely new concept for the aircraft fuselage and tanks. To minimize surface – volume ratio, the insulated tanks are placed both fore and aft of the passenger compartment. Weight advantages are gained by tank configurations which are integrated in the aircraft fuselage structure. For the complicated aircraft fuel system three absolutely equivalent fuel booster pumps per tank compartment are foreseen [427].

The 2.8 times higher energy content of LH_2 compared to kerosene (related to mass) makes it possible to have a much smaller lift-off weight for the same range and capacity. A comparison of design data and various performance characteristics of subsonic aircrafts for the fuels listed is shown in Table 45.

Similar studies have been presented for LH_2-fueled supersonic aircraft. Here the immense fuel requirements are even more in favor of LH_2. A comparison shows a reduction in the lift-off weight by ca. 50 %.

Laminar Flow Control (LFC). The cryofuel LH_2 makes it possible to use the so-called *cryogenic wall cooling* technology. By cooling major aerodynamic surfaces of the aircraft to ca. 150 K, laminar flow in boundary layers is stabilized with a consequent reduction of skin-friction drag. The necessary refrigeration can be taken from the evaporating LH_2 directly or via a secondary refrigeration system (e.g., LN_2). Overall drag reduction in the order of 20 % leads to a fuel saving of about the same amount at cruising speeds [428].

Airport requirements for LH_2 as fuel have been investigated in different studies. The facilities include the liquefaction plant, LH_2 storage capacity and LH_2 fuel handling systems [429, 430]. Because of planning and development issues, the use of LH_2 as an alternative fuel for aviation will not occur before the next two aircraft generations, i.e., about 2030.

9.3.3.3. Hydrogen for Automotive Vehicle Transport

Mobile Otto and Diesel internal-combustion engines for vehicles can be operated on hydrogen or hydrogen – gasoline mixtures. Ricardo (1924) and Burstall (1927) carried out some of the first investigations. In 1930, Erren made intensive studies on hydrogen – air and hydrogen

Table 45. Comparison of design and performance data of alternate fueled subsonic aircraft (basis: 400 passengers, 44 000 kg payload, 5500 NMi range, 0.85 Mach cruising speed)

	Liquid hydrogen (LH_2)	Liquid methane (LCH_4)	Synjet
Gross mass, kg	168 830	225 570	232 060
Block fuel, kg	21 620	58 980	72 530
Operating empty mass, kg	103 300	116 170	107 370
Wing area, m^2	296.8	385	380.3
Span, m	51.8	58.9	58.5
Fuselage length, m	65.7	61.4	60
Gross mass, kg	156 130		
Block fuel weight* , kg	15 270		
Specific fuel consumption (cruise), kg h^{-1} N^{-1}	0.206	0.504	0.615
Lift/drag (cruise)	17.4	19.21	19.13
Thrust per engine, N	135 000	177 000	185 000
Energy utilization, kJ $seat^{-1}$ km^{-1}	636	723	759

* with respect to laminar flow control.

– oxygen motors. The first internal-combustion engine car in the United States fueled by hydrogen was presented by BILLINGS in 1966 in Utah. At the moment further developments are in the Federal Republic of Germany, Japan, Australia and the Soviet Union. The literature on this topic is abundant. Overviews are given in [431 – 433].

Modification of the Engine. Some properties of hydrogen make engine modifications necessary; low ignition energy and high flame speeds can cause self-ignition during the mixture preparation or flame flash-back. The octane number of hydrogen is much lower than that of gasoline. However, the wide ignition range allows burning of lean mixtures and gives a large control range.

Various techniques are used to prepare the feed mixture to the combustion chamber. With *external mixing* a homogeneous hydrogen – air mixture is introduced. Uncontrolled preignition or flash-back into the intake manifold is prevented by adding ballast, preferentially water, and by timed individual port injection of hydrogen close to the cylinder intake. *Internal mixture* formation is achieved by direct injection into the combustion chamber. The necessary supply pressure must be at least 1.5 MPa, or even, depending on the time of injection, more than 10.0 MPa. This is only possible by using piston pumps for liquid hydrogen. Figure 109 shows the principle layout of internal and external mixture formation.

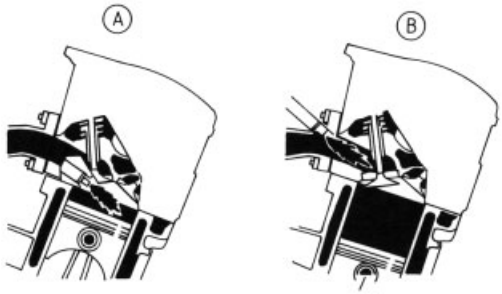

Figure 109. Internal mixture formation (A) using cryogenic hydrogen (direct injection) and external mixture formation (B) using ambient-temperature hydrogen

Attainable specific charge heating values (energy content per cylinder loading) are compared in Table 46 under various operating conditions. Revolutions per minute (rpm) and effective efficiencies are comparable to the gasoline motor. Because of the lower air quantities possible and the lower heating value of the mixture, *external mixture* formation with water injection gives power ratings comparable to that of Diesel motors, whereas with internal mixtures ca. 40 kW/L cylinder volumes can be attained [435].

Hydrogen-powered engines emit only water and NO_x. Numerous investigations concerning the calculation and measurement of the nitric oxide emission have been carried out, e.g., [436, 437]. In Figure 110 typical NO_x values for various modes of operation with hydrogen and gasoline are shown as a function of the equivalent

Table 46. Specific charge heating values of hydrogen – air mixtures in combustion engines compared to gasoline

Operating conditions	Maximum of spec. charge HV $H_{spec.max}$		Maximum of efficiency η_{emax}		Maximum of excess air φ_{min}	
	φ	kJ/L	φ	kJ/L	φ	kJ/L
Gasoline	1	37.7	1.1	34.4	0.83	31.6
Hydrogen (external mixture formation)	1	31.9	0.4	15.5	0.2	8.3
Hydrogen (internal mixture formation)	1	45.3	0.4	18.1	0.2	9

ratio ($\varphi = l/\lambda$). Especially in lean modes of operation, i.e., with excess air, hydrogen motors operate more or less emission-free.

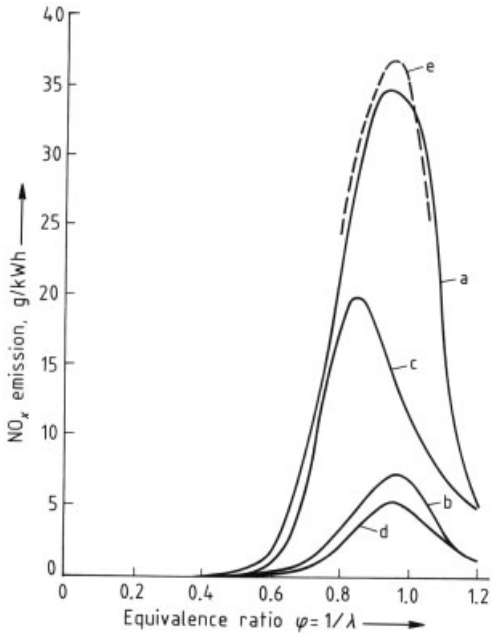

Figure 110. Typical NO_x values for various modes of operation of hydrogen (a – d) and gasoline engines
a) External mixture formation, load governing; b) External mixture formation, quality governing; c) External mixture formation, optimum attainable values; d) Internal mixture formation; e) Typical values for Otto and Diesel engines

On-Board Hydrogen Storage. At present three storage possibilities can be considered:

in the gaseous state in pressure vessels,
in the liquid state in vacuum-insulated tanks, or
chemically bound in metal hydride storage tanks.

Table 47 compares various mobile storage methods for vehicles. It is clear that none of the hydrogen storage systems have reached the undoubted advantages of the fossil energy carrier, gasoline.

Pressure gas storage vessels are disadvantageous because of their large weight and volume. The high storage pressure of $\geq$ 20.0 MPa raises safety and supply questions.

Liquid hydrogen tanks for vehicles are larger than gasoline tanks and require a complicated construction because of the low storage temperature. Characteristic data for a tank in the boot of a car (BMW-DFVLR experimental vehicle) are [434]:

double-walled cryo-vessel for 45 L of hydrogen,
vacuum superinsulation cooled by means of evaporating hydrogen,
mass (filled) of 45 kg,
operating pressure 0.2 MPa, lowest operation temperature -253 °C,
evaporation losses <2 %,
hydrogen delivery pressure via LH_2 piston pumps 1.5 – 2.0 MPa.

Problems exist concerning the evaporation rate, safety questions and tanking techniques. Tanking of the test vehicles occurred at a computer-controlled, half-automatic LH_2 station, so that maloperation was avoided. The tanking time was ca. 5 min.

Mobile hydrogen *hydride storage vessels* are used for example in Daimler Benz test vehicles. For details of the hydride technology see Section 9.3.1.2. Suitable hydride-forming metals are those, in which reversible hydrogen absorption occurs in the temperature range of -25 – 100 °C. These are *low-temperature* hydride materials, such as FeTi. *High-temperature* hydride materials, such as Mg_2Ni, have a higher capacity, but more energy at 350 °C is required to drive off the stored hydrogen. Figure 111 shows a hydride tank using a titanium – vanadium – manganese alloy for a vehicle. Addition or removal of heat is performed by a heat carrier, such as a

Table 47. Comparison of mobile storage systems for hydrogen (basis: 45 m^3 H_2 corresponding to 15 L gasoline)

	Liquid H_2	Gaseous H_2	Metal hydride-H_2
Hydrogen content	57 L	45 m^3	4 kg
Gross storage mass, kg	20	2×60	320
Hydride material, kg			220
Maximum operating pressure, MPa	0.4	30.0	5.0
Operating temperature, °C	−253	−20 – +50	−20 – 100
Energy densities,			
kWh/kg*	6 – 7	1.1	0.4
kWh/L*	0.95	0.55	0.8

* Energy density of a gasoline tank: 8 – 8 kWh/kg (8 – 9 kWh/L).

water – defrosting agent mixture connected externally during tanking or internally during operation of the vehicle. With a full storage vessel the minimum pressure of 0.2 MPa required to start the motor even at −20 °C is available [438]. High-purity hydrogen (99.999 %) must be used to avoid a passivation of the active material. A quick tanking operation with gaseous hydrogen at 5.0 MPa takes ca. 10 min.

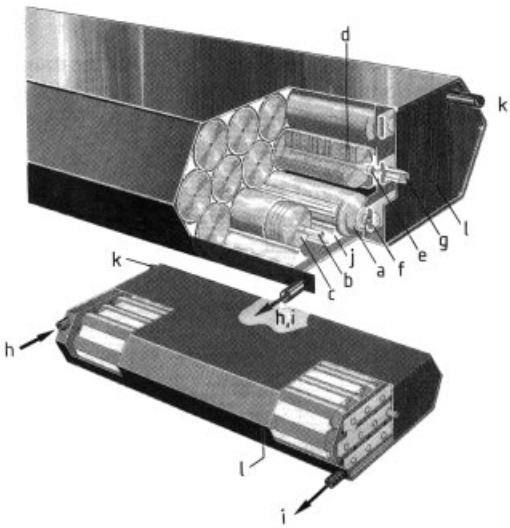

Figure 111. Hydride storage tank for motor vehicle drives of HWT
a) Storage tube; b) H_2-guide tube; c) Lamella; d) Hydride; e) Filter (sintered metal); f) Gas-collecting tube; g) H_2 connection; h) Water inlet; i) Water outlet; j) Filling body; k) Vent valve connection; l) Shell

The motor concept chosen for a vehicle depends on the method of storing the hydrogen on board. Low-pressure gaseous hydrogen allows only external mixture formation, whereas liquid hydrogen, because of its cryogenic properties, is more flexible (liquid compression, cooling, injection).

State of the Art. Representative for the many investigations being carried out in several countries, two development projects in the Federal Republic of Germany are described:

Between 1984 and 1986 Daimler Benz tested a fleet of 10 hydrogen vehicles under normal operating conditions in Berlin. Delivery vans (Fig. 112) were equipped with a 2.3 liter spark-ignition engine with external mixture formation and water injection and a power of ca. 77 kW. Hydrogen storage was by four low-temperature, liquid-heated hydride storage units with a total mass of 560 kg and a hydrogen capacity of 66 m^3. This was sufficient for a range of 120 km in city traffic. The total mileage for the entire fleet amounted to 160 000 km [439].
Deutsche Forschungsanstalt für Luft- und Raumfahrt (DFVLR) has been working with BMW since 1979 on vehicles with LH_2 tanks and different approaches for the mixture formation. The present state of development is the 745i Sedan with a 3.5 liter spark ignition engine with a so-called "late internal mixture formation," i.e., hydrogen injection during the compression stroke. The power output is claimed to be ca. 150 kW [440].

9.3.4. Electricity Generation from Hydrogen

Apart from the direct utilization of hydrogen for heating purposes (see Section 9.3.2) the generation of electricity is important in the hydrogen energy concept. This can be done indirectly via combined heat – power processes or directly by electrochemical means.

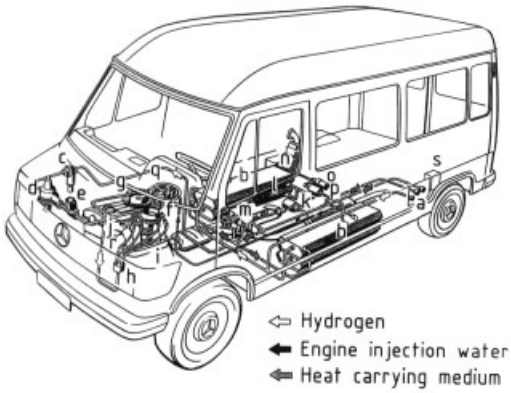

Figure 112. Daimler-Benz delivery van with modified Otto engine for hydrogen as fuel and onboard hydride hydrogen storage
a) Refueling connectors; b) Hydride hydrogen storage; c) Filter; d) Pressure-reducing device; e) Magnetic shut-off valve; f) Hydrogen metering device; g) Differential pressure controller; h) Hydrogen distributor; i) Inlet manifold; j) Hydrogen injection nozzles; k) Recirculating pump; l) Exhaust gas – water heat exchanger; m) Exhaust flaps; n) Storage for engine-water injection system; o) Water feed pump; p) Filter; q) Water metering device; r) Water injection nozzles; s) Electronic control unit

9.3.4.1. Heat – Power Processes

Suitable heat – power processes for power generation from hydrogen are [441]:

1) conventional steam turbine processes with hydrogen-fueled boilers,
2) open hydrogen – air gas turbine processes, and
3) hydrogen – oxygen steam turbine processes

The thermal efficiency of various hydrogen-fired power station processes with up to 100 MW power is given in Figure 113 as a function of the range of turbine-entrance temperature t_E. A hydrogen – oxygen power station with condensation attains an efficiency of 52 % at full load. This type of power station (line a) is most suitable for peak-load power production. For immediate increase of power output of fossil-fired ground-load or medium-load power stations a hydrogen – oxygen steam production unit can be integrated (see Fig. 113, line b instantaneous reserve plant).

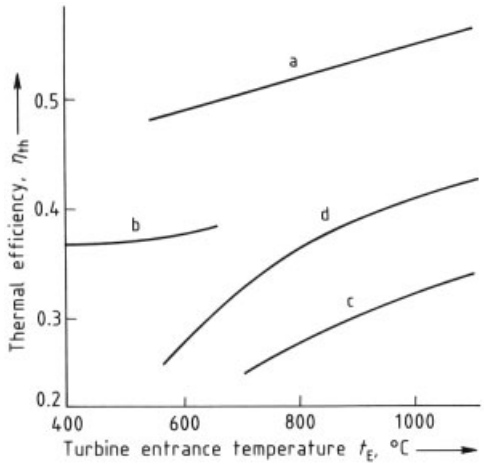

Figure 113. Thermal efficiency of various hydrogen-fired power station processes
a) Hydrogen-oxygen power station; b) Conventional hydrogen power station; c) Hydrogen power station with gas turbine; d) Hydrogen power station with gas turbine, improved design

A new component suggested for power stations is the hydrogen – oxygen steam producer. An experimental version for a thermal capacity of 15 – 40 MW exists at the DVFLR (Fed. Rep. of Germany). A schematic is shown in Figure 114. Hydrogen and oxygen are introduced through a suitable lance and equally distributed in the combustion chamber before burning. The combustion product, the temperature of which is 3000 °C, is cooled down to the required steam temperature by water quenching and fed to the turbine. It is particularly important to maintain the stoichiometric ratio of the fuel mixture in order to avoid noncondensable gas components (excess oxygen or hydrogen). This is achieved by means of a sophisticated control strategy. Starting from zero, full load can be reached within 1 s (here 40 MW); steam with a pressure of 4.0 – 9.0 MPa and a temperature of 560 – 950 °C can be produced [442].

9.3.4.2. Electrochemical Energy Conversion

In a reversal of the electrolysis process, the chemical energy of hydrogen can be converted directly into electrical energy. This takes place in fuel cells by allowing the "cold" combustion of hydrogen and oxygen to occur electrochemically (→ Fuel Cells) [443].

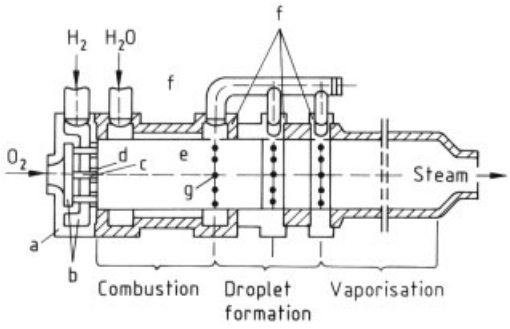

Figure 114. Schematic of the DFVLR $H_2 - O_2$ steam producer
a) Injection head; b) Gas distribution; c, d) Injection manifold; e) Combustion chamber; f) Injection rings; g) Radial water injection

At room temperature the maximum possible voltage of the hydrogen – oxygen system is 1.23 V. In practice, cell voltages of 0.7 V are reached. Since heat – power conversions are avoided, efficiencies of 40 – 60 % can be attained. For details of the mode of operation, electrodes, catalyst materials and construction see [444, 445]. The most developed versions are the *low-temperature fuel cells*, which are usually identified by the electrolyte employed, as alkaline fuel cells (AFC), phosphoric acid fuel cells (PAFC), and solid polymer electrolyte fuel cells (SPEFC).

Alkaline fuel cells are used for power production in space as well as for special applications (relay stations, emergency power supply, military purposes). Without exception, they use pure hydrogen and carbon dioxide-free oxygen and have a low specific mass (7.2 kg/kW) and a long lifetime. They are, however, very expensive (1500 $/kW) [446].

Phosophoric acid fuel cells operate at 200 °C and use hydrogen or hydrogen – carbon monoxide mixtures produced from natural gas and air. The complete unit contains not only the cell modules but also various components, such as utility supplies, systems for temperature control, means to remove product water, and controls for the electrolyte pumping.

High-temperature fuel cells are still in the development stage; *molten carbonate fuel cells* (MCFC) operate at 600 °C and use an alkali-metal carbonate melt as electrolyte. *Solid-oxide fuel cells* (SOFC) contain ceramic ZrO_2 membranes, (solid electrolytes); on these electrolytes hydrogen reacts with air at 800 – 1000 °C. The hydrogen production from methane and steam can be integrated into the cell [447].

Fuel Cell Power Plants. Hydrogen, hydrogen-rich gases, or gases which can be converted to hydrogen can serve as fuel for fuel cell power plants. As depicted in Figure 115, such a facility for district electricity and heat generation comprises three subsystems; a fuel processor, a power section made up of a number of modules and a power conditioner. The suitability of the phosphoric acid fuel cell for this purpose has been proven in the United States in a field test (46 40-kW PAFC units) [449]. In Japan two 1 MW blocks have been built as an alternative energy production to thermal power generation [450].

9.4. Future Developments

Several books and monographs dealing with the perspectives and planning of the utilization of hydrogen as a major universal energy carrier have been published [386, 389, 451 – 453].

9.4.1. Production Schemes

Possible Schedule. The introduction of hydrogen as an energy carrier can be assumed to be governed mainly by economic aspects. The following developments can be expected [454]:

1) *First stage of utilization.* Future hydrogen utilization will be based on current uses of hydrogen, which are mainly nonenergetic. Hydrogen produced from non-hydrocarbon sources (normally from electrolysis) will be introduced to serve similar purposes.
   *Primary energy*will be supplied by nuclear or hydropower stations with energy reserves available during off-peak periods. The economic conditions for electrolytic production of hydrogen are especially favorable in France (nuclear power) [455] and Canada (hydropower) [456].
2) *Special Applications.* The combined production and utilization of hydrogen and oxygen by electrolysis could provide an additional economic impetus. Possible fields of utilization are:

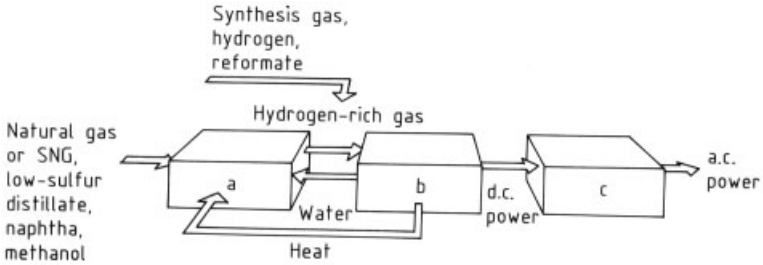

Figure 115. Fuel cell power plant [448]
a) Fuel processor; b) Fuel cell power section; c) Power conditioner

heavy oil upgrading (hydrogen for hydrogenation, oxygen for residue gasification) [457, 458]
wood gasification combined with methanol production [459]
all other kinds of coal, residue, or waste gasification with H_2, CH_4, CH_3OH, etc. as products
biological process such as aerobic wastewater treatment (oxygen required). Hydrogen together with any methane produced in anaerobic stages, could be used as fuel for power production with gas motors or for a denitrification process.

3) *Introduction as a Direct Energy Supply.* Use of hydrogen will start as a supplement to actual energy markets, addition of up to 10 % hydrogen in natural gas nets or use as a fuel in transportation (city buses, underground/underwater devices, aircraft).
The *primary energy supply* for the uses in both last sections would be the same as for the utilization as energy off peak power. In addition, wind, water, and solar units, which use electrolytically produced hydrogen for long-term storage would also be used.
4) *Advanced Stage of Utilization.* In countries with high solar radiation intensity but little industry, hydrogen could be used as a means of storing solar energy [460]. The solar radiation is converted into electric power using solar collectors, photovoltaic units, or Stirling motors driven by solar heat.
First decentralized applications for hydrogen as an energy carrier could be for refrigerating large-scale units and for supplying heat in agricultural and industrial operations.
Schemes for *supplying* the *total energy* requirements to remote areas by hydrogen have also been suggested, e.g., energy requirements of an island in Alaska supplied via wind energy and hydrogen [461].
5) *Hydrogen-Energy World.* The final goal of a world selfsufficient in energy (that does not depend on fossil resources) is the erection of large solar farms in the sunflooded desert areas of Africa, Asia, and Australia. Countries in these regions could export hydrogen (or electric power) to industrial regions with less sun. For more details see [454, pp. 297 – 304].
According to this study, an area of 0.14×10^6 km^2 (0.1 % of the land surface of the globe), will be required for the production of 1000×10^6 tce/a. The total surface of suitable areas in desert regions is 0.6×10^6 km^2 which is more than sufficient.
The material requirements for the construction of a solar farm are also within the capabilities of an industrialized country. This is shown in Table 48 [454, p. 321] for the Federal Republic of Germany. Nickel and silicon are the exceptions, the first because of the limited resources available and the latter because appropriate production technologies still have to be developed. Supply of other key items of solar farms such as solar cell panels, heliostat mirrors, Stirling motors, power generators, and electrolysis units, is also adequate (see Fig. 116) [454, p. 329].

Projects. Already existing hydrogen projects serve and will serve the following purposes:

1) Demonstration of feasability
2) Study of technical problems occurring during operation under realistic conditions
3) Optimization and coordination of the various systems involved (e.g., mechanical – pho-

Table 48. Comparison of material requirements for hydrogen plants with the consumption of primary raw materials in the Federal Republic of Germany (1983). Projected annual production of hydrogen plants ca. 155 PJ/a (equivalent to the energy produced by 100 100-MW-units per year, usable ca. 4000 h/a) [389]

Raw material	Annual consumption 1983*, 10^3 t/a	Consumption for production of solar plants, % of annual consumption (1983)			
		Photovoltaic solar cell	Solar tower	Paraboloid mirrors, solarthermic	Wind converter
Steel	26 600	12.7	32.0	24.0	11.8
Aluminum	1085	11.5	16.6	18.4	1.8
Nickel	63	95.2	206.3	135.0	47.6
Glass	1240	126.6	209.0	178.2	6.5
Concrete	210 000	10.6	18.3	21.0	5.0
Silicon	0.36	16 667			

* Annual primary energy use in 1980: World 300×10^3 PJ/a; Western Europe 76×10^3 PJ/a ; Fed. Rep. of Germany 7.6×10^3 PJ/a ; North America 90×10^3 PJ/a.

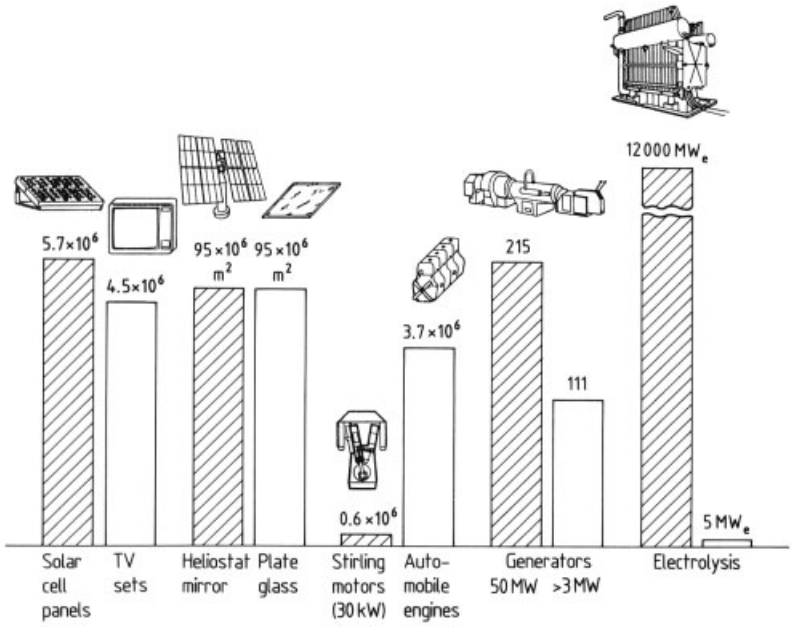

Figure 116. Comparison of annual production of certain industrial products in the Federal Republic of Germany and the required comparable items for hydrogen plants for the hydrogen energy concept [460]

tovoltaic systems, electronic – photovoltaic systems)

4) Moving from the "tailor-made" stage of the components to a prototype production stage
5) Demonstration of self-sufficiency in terms of energy supply without fossil fuel or nuclear power

Although some individual components of a future hydrogen economy have already been tested (see Section 9.3), few projects have realized the concept in its entirety from hydrogen production to its utilization. In 1979, R. E. Billings built a house in Independence, Missouri, in which the energy supply, including that for car and tractor, was based on hydrogen. The primary energy was by hydropower, storage by means of metal hydrides and solar energy was used as subsidiary energy for heating purposes.

In Harnøsand, Sweden, O. Tegstrøm has converted the energy supply of his car and his house, to hydrogen. Wind is used to supply the primary energy via and turbines with 55 kW. Metal hydrides are used for hydrogen storage.

Hysolar [462]. Founded in 1985, Hysolar (a joint venture between the Federal Republic of Germany and Saudi Arabia) foresees the instal-

lation of three photovoltaic electrolysis plants: a 100-kW (electric power) plant is to be built in Saudi-Arabia; two plants with 10 and 2 kW at a German and a Saudi Arabian university respectively serve research and demonstration purposes [462].

Solar Hydrogen Bavaria (SWB) is scheduled to go on stream in the Federal Republic of Germany in 1989 [463]. Figure 117 shows a diagram of the plant. Project costs amount to more than 50×10^6 DM (33×10^6 DM for the plant, 12×10^6 DM for personnel, 5×10^6 DM for infrastructure).

Plant data:

Solar generator – 500 kW_{el} from various modules
  Photovoltaic cells: total surface area 7000 m^2
Electrolysis unit:
  100 kW_{el} conventional KOH electrolysis
  100 kW_{el} zero gap KOH/NaOH electrolysis
  80 kW_{el} solid polymer membrane electrolysis
Gas storage:
  5000 m^3 (STP) of H_2 at 3 MPa
  500 m^3 (STP) of O_2 at 3 MPa
Fuel cells:
  6 – 8 kW_{el} alkaline type
  80 kW_{el} phosphoric acid type
Catalytic combustion: 4 kW_{th}
Gas boiler: 20 kW_{th}

Euro-Quebec Project [464]. In this study initiated in the Federal Republic of Germany, the transport of hydroelectric power from Canada to Europe by means of hydrogen is being investigated. The Canadian hydropower is converted into hydrogen by electrolysis. The hydrogen is transported in one of three forms: (1) as liquid hydrogen shipped in special tankers (or eventually by aircraft); (2) as liquid ammonia shipped in special tankers; or (3) as methylcyclohexane shipped in oil tankers. The hydrogen is used in Europe for electricity, heat generation, vehicle and aviation propulsion, and hydrogen as an additive to natural gas for domestic or industrial use.

Figure 118 A shows the mass flow diagram developed for Phase I of the study; the energy flow diagram is shown in Fig. 18 B.

Other Projects. Apart from these direct hydrogen projects, a great number of solar energy stations and wind farms (particularly common in California) can be seen as precursor of the hydrogen energy economy.

All hydrogen projects to date convert the universal but expensive energy carrier electricity with notable losses to hydrogen. Sometimes the cycle is completed and the hydrogen is converted back to electricity.

Direct production of hydrogen from solar radiation (e.g., by photochemical or biological methods) is still under research.

9.4.2. Hydrogen Energy Economics

Various factors can accelerate the introduction of the hydrogen technology, but do not exclude other solutions for the energy supply such as drastic savings or introduction of new energy forms. For time schedules for the introduction of hydrogen technology and other prognoses see [451, 454, 465]. The political decision to use hydrogen as an energy carrier reflects the following:

1) *Technological and Ecological Aspects.* The utilization of fossil and nuclear energy can be reduced in favor of energy savings, renewable resources, and solar energy. This could be forced by climate changes and environmental pollution.
2) *Economic Aspects.* Increased energy costs and storage costs for conventional primary energy and energy carriers could accelerate the introduction of the hydrogen economy.
3) *Political Aspects.* National hydrogen energy economics could be favored by the effect of primary energy import on the balance of trade, the creation of jobs by national energy programs, and the improvement of the structure of the economy.
4) *Security of Supply.* Energy produced from a local primary energy source can be stored in the form of hydrogen.
5) *Social Compatibility.* Energy production is coupled with an environmentally acceptable energy carrier.

Price estimates for hydrogen based on present-day technologies (see Fig. 119) [454, p. 341] depend on many factors. Comparisons of hydrogen production by means of solar cell

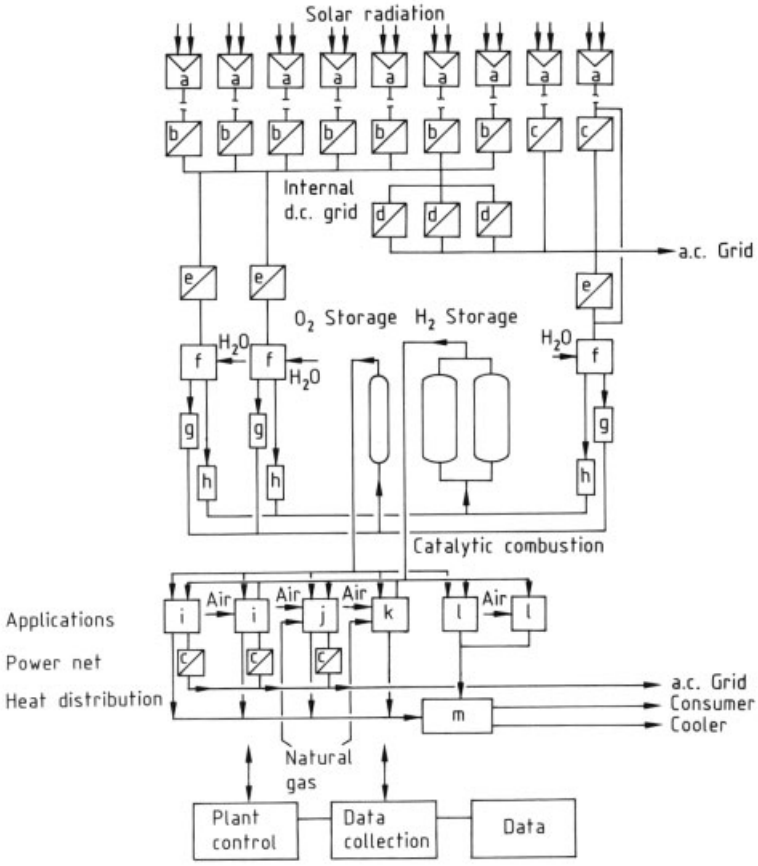

Figure 117. Block diagram of the Bavaria Solar Hydrogen Plant (planning status)
a) Photovoltaic cell; b) d.c. Converter; c) Power net; d) a.c./d.c. Converter; e) Electrolysis power supply; f) Electrolysis unit; g) Oxygen purification; h) Hydrogen purification; i) Alkaline fuel cell; j) Phosphoric acid fuel cell; k) Gas heater; l) Gas heater; m) Heat storage

plants, solar collector plants, parabolic mirror plants, or wind farms cannot consider the innovative potential of each technology over the projected time span.

Another method to assess the role of hydrogen technology in the future energy supply is to compare the efficiency of energy supply systems. In Figure 120 the efficiencies of room heating using electric power produced by photovoltaic means are compared in the Federal Republic of Germany. The power is generated inside the country and then distributed either in a hydrogen pipeline (A) or as such (B) to the user. The much more efficient power production in the Sahara is also considered. Energy can be transported directly as current (D) or as hydrogen (C).

9.4.3. International Research

A particular advantage of hydrogen technology is that all necessary systems and components are in an advanced state of development. Some technologies, such as hydrogen transport and storage, have been used industrially for decades. In spite of this, intensive research is still required in important areas. These areas are being investigated by several countries which cooperate under the auspices of the International Energy Agency, IEA (Table 49) [467].

Canada. Canada plans to generate hydrogen by hydropower and to test applications in pilot projects. Some activities are listed in Table 49.

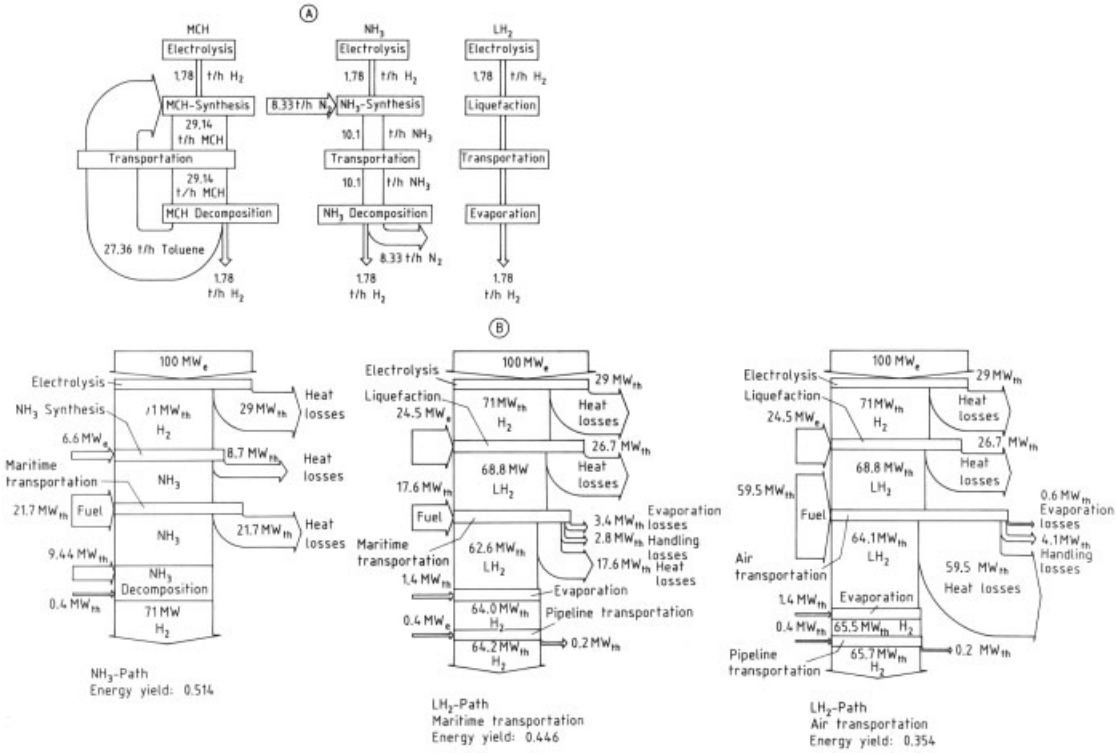

Figure 118. Flow diagrams for the transportation of hydrogen from Canada to Europe (Euro – Quebec project). It is planned to transport hydrogen in liquid form or chemically bound as methylcyclohexane (MCH) or ammonia by sea or air
A) Mass flow diagrams (transportation energy is neglected)
B) Energy diagram (in the energy diagram for chemically bound hydrogen only ammonia is shown because MCH is very similar and slightly less effective, $\eta = 0.5$ instead of 0.514)

Table 49. Hydrogen research activities of some member countries of the International Energy Agency (IEA) [467]

Subtask	Subject	Federal Republic of Germany	Japan	Sweden	Switzerland	United States
Storage	Metal hydride storage	×	×	×	×	×
	Liquefaction of hydrogen	×				
	Hydrogen storage on carbon					×
Conversion	Engine with inert gas recirculation		×			
	LH_2-Pump for internal combustion engines	×				
	Reversible hydrogen storage electrode		×			
Safety	Alternation of material properties by hydrogen embrittlement	×	×			
	Safety aspects of hydrogen combustion	×				
	Man years 1986:	13	10.5	1.5	3.2	4.5
	Man years 1987:	11.8	10.5	1.5	4	4.5
	Man years 1988:	11	10.5	1.5	4	4.5

Systems analysis studies regarding special applications for hydrogen have also been carried out [468]. Canadian activities involve basic research in universities, industry, (especially in the field of electrolysis), and national research centers (sponsored by the National Research Council, NRC).

Federal Republic of Germany [452, 466]. Industry, research institutions, and universities are continuing the development of hydrogen technology with the help of government funds. Pilot projects are described in Section 9.4.2. In the 1990s, work will concentrate on following areas:

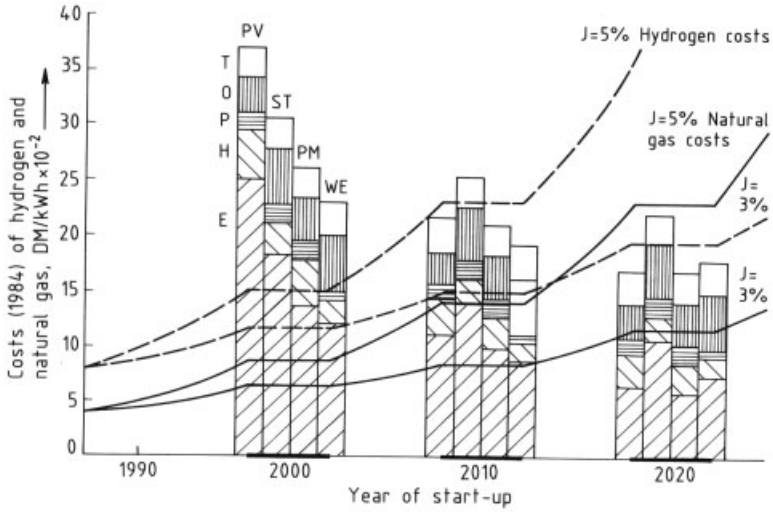

Figure 119. Hydrogen production costs for four hydrogen plants and three different start-up dates (interest rate: 8 %, depreciation: 30 a, construction: 4 a, inflation: 5 %). Comparison with real escalating hydrogen (– – –) and natural gas (——) costs (J = annual real rate of escalation, cost of electricity production = E, of hydrogen production = H, of piping = P, of operation = O, and T of transport for 3300 km)
The plants are: PV = photovoltaic solar cell plants, ST = solar thermic, solar power plants, PM = parabolic mirror solar thermic plants, WE = wind energy farms [454]

1) Energy generation (photovoltaic and solar thermal techniques in cooperation with countries with high solar radiation intensities)
2) Hydrogen production (electrolysis, advanced alkaline electrolysis, high-temperature electrolysis, basic research on biological hydrogen generation)
3) Applications (fuel cells, stationary power applications, peak power, power – heat combined cycle)
4) Materials and safety

The Federal Republic of Germany takes the leading role in the international funding of hydrogen technology. State funding in the energy and renewable resources areas amounts to 200×10^6 DM/a; 100×10^6 DM of this sum are to be spent in the 1990s on hydrogen technology.

Japan. Japanese activities are concentrated in the Sunshine Project of the Ministry of International Trade and Industry (MITI). According to annual reports on this topic [469], the following areas are being investigated (1986):

1) Hydrogen production by SPE water electrolysis (see Section 4.2)
2) Storage and transportation of hydrogen by using metal hydrides
3) Utilization of hydrogen (combustion, reciprocating engines, cars, etc.)
4) Safety (explosion prevention).
5) Photochemical processes, thermochemical cycles (Br^- system cycle), high-temperature – high-pressure water electrolysis, and hydrogen from biomass

Funding has decreased continuously from a maximum of 950×10^6 Yen in 1980 to 190×10^6 Yen in 1987. However, funds for solar energy (which amounted to 7560×10^6 Yen in 1987) and overhead costs are not included in these figures. Japan is also a member of the IEA (see Table 49).

United States. Research in the United States deals principally with energy generation via solar radiation and thus only indirectly with hydrogen technology, although a remarkable amount of solar energy is generated, in the South and the West of the United States in particular. This energy is fed directly into the grid. Hydrogen is at present not under consideration as an energy carrier.

Basic research at various universities takes place within the IEA framework and is sponsored by industry and government.

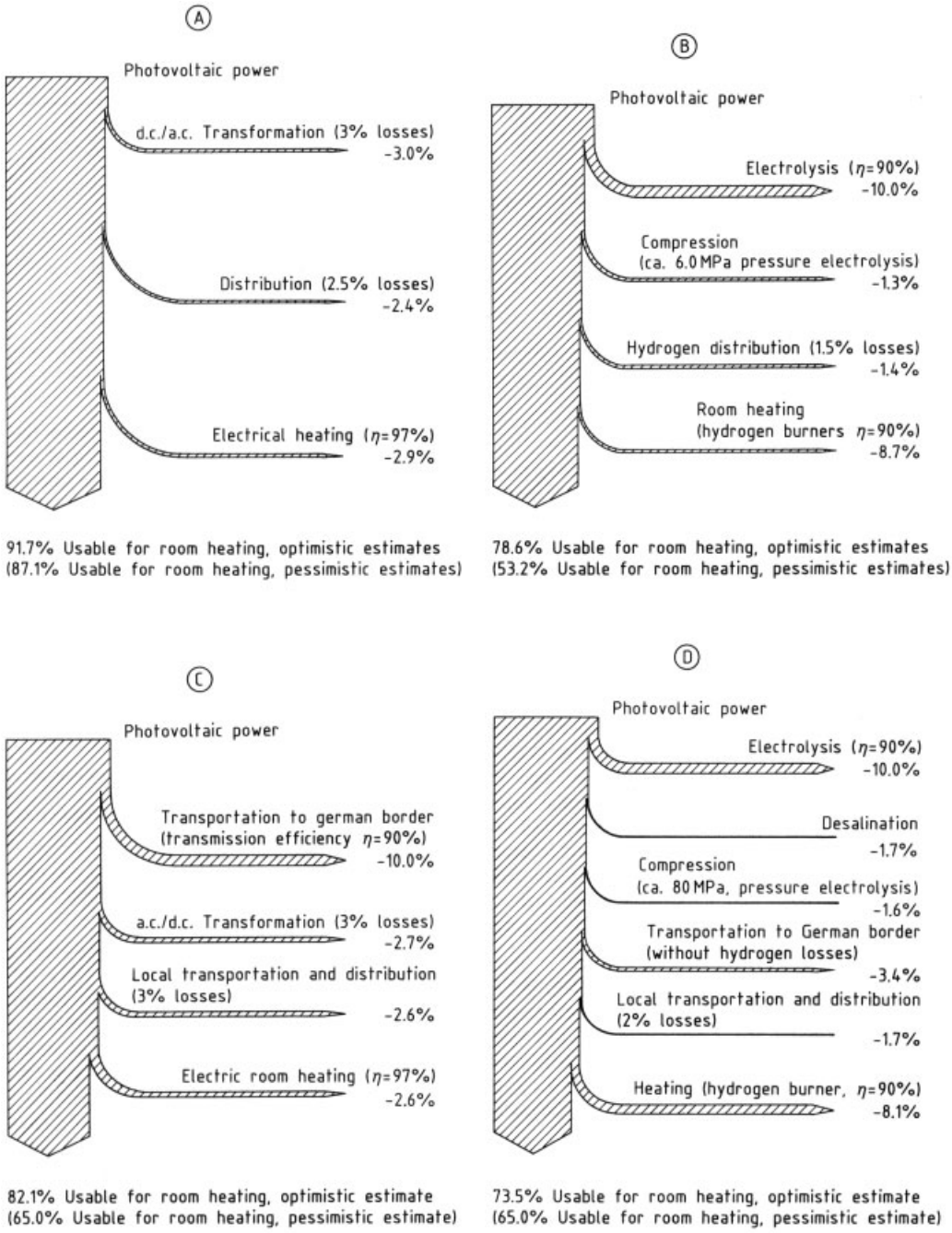

Figure 120. Comparison of photovoltaic energy generation in the Federal Republic of Germany (A, B) and in arid regions in North Africa (Sahara) (C, D), transportation in the form of hydrogen (A, C) or in the electric grid (B, D). End use: room heating in the Federal Republic of Germany [466]

Soviet Union. Proof of the high standard of research in hydrogen technologies was the 1988 report of the flight of a Tupolev aircraft powered by liquid hydrogen (see Section 9.3).

10. References

1. *Gmelin* System no. **2**, 8.
2. *Ullmann*, 3rd ed., **18**, 501.
3. *Ullmann*, 4th ed., **24**, 243.
4. R. D. McCarthy: *Hydrogen Technology Survey – Thermophysical Properties*, NASA SP-3089, Washington D.C. 1975.
5. JANAF: *Thermochemical Tables*, NSRD NBS 37, Washington D.C. 1975.
6. H. M. Roder in R. D. McCarthy, J. Hord (eds.): *Selected Properties of Hydrogen*, Dept. of Commerce NBS Report, Boulder 1981.
7. K. E. Cox, K. D. Williamson, Jr. (eds.): *Hydrogen: Its Technology and Implications*, **2nd vol. 1 – 5**, Boca Raton 1979.
8. L'Air Liquide: *Encyclopedie des Gaz*, Elsevier, Amsterdam 1976.
9. C. L. Newton, *Chem. Process. Eng. (London)* **48** (1967), no. 12, 51 – 58.
10. European Space Agency Contract Report, Contract 5977/84/NL/PB(SC), Chilton, United Kingdom, Jan. 1986.
11. K. F. Mucker, D. White et al., *Phys. Rev. Lett.* **15** (1965) 586.
12. N. Sullivan et al., *Recherche* **11 (111)** (1980) 587, see also *Bull. Inst. Int. Froid* **2** (1984) 484.
13. G. A. Neece et al., *J. Comput. Phys.* **7** (1971) 621.
14. F. V. Grigorev, S. B. Kormer, O. L. Mikhailov, *JETP Lett. (Engl. Transl.)* **16** (1972) no. 5, 201.
15. R. Hawke, *Phys. Rev. Lett.* **41** (1978) 994.
16. *Landolt-Börnstein* **IV 2c**, Springer Verlag, Berlin-Heidelberg-New York 1980.
17. C. L. Young (ed.): *IUPAC Solubility Data Series*, vol. 5/6; Hydrogen and Deuterium, Pergamon Press, Oxford 1981.
18. D. Behrens, R. Eckermann (eds.): *DECHEMA Chemistry Data Series* vol. 6; "Vapor-Liquid Equilibria for Mixtures of Low Boiling Substances," Dechema, Frankfurt 1982.
19. J. R. Lacher, *Proc. R. Soc. London, Ser. A* **161** (1937) 526.
20. W. Mueller, J. Blackledge, G. Libowitz (eds.): *Metal Hydrides*, Academic Press, New York – London 1968.
21. G. Alefeld, J. Völkl (eds.): *Hydrogen in Metals*, vol **1, 2**, Springer – Berlin – Heidelberg – New York 1978.
22. H. J. Hoge, R. D. Arnold, *J. Res. Natl. Bur. Stand. (U.S.)* **47** (1951) 63.
23. H. U. Karwat, *Chem. Ing. Tech.* **32** (1960) 605.
24. P. Protopapas et al., *Hydrogene Met. Congr. Int.* 1972, 414.
25. G. Holleck, *J. Phys. Chem.* **74** (1970) 503.
26. D. R. Stull et al. in *JANAF Thermochemical Tables*, 2nd ed., NSRD NBS, Washington D.C. 1971.
27. J. W. Colton, *Hydrocarbon Process. 60* (1981) 177.
28. P. A. Giguere, *J. Chem. Educ.* **56** (1979) 571.
29. D. J. G. Ives, G. J. Janz: *Reference Electrodes*, Chap. 2, Academic Press, New York 1961.
30. N. N., *Pure Appl. Chem.* **57** (1985) 531.
31. J. Hord, *Int. J. Hydrogen Energy* **3** (1978) 157.
32. I. L. Drell, F. E. Belles: *Survey of Hydrogen Combustion Properties*, NACA Report 1383, Washington D.C. 1952.
33. M. Fischer, H. Eichert, *DFVLR-Nachr.* **34** (1981) 33.
34. W. C. Eichelberger et al., *Chem. Eng. Prog.* **57** (1961) no. 8, 94.
35. *Tritium in the Physical and Biological Sciences*, vol. **1**, Int. Atomic Energy Agency, Vienna 1962, p. 56.
36. *Kirk Othmer*, **7**, 539.
37. G. Vasaru: *Deuterium and Heavy Water – A Selected Bibliography*, Elsevier, Amsterdam – Oxford – New York 1975.
38. R. Prydz: *The Thermodynamic Properties of Deuterium*, NBS Report 9276, Boulder (Col.) 1966.
39. D. H. Liebenberg, R. L. Mills, J. C. Bronson, LA-7071-MS Informal Report, Los Alamos 1978.
40. P. C. Souers et al.: Three-Phase Region of D2-DT-T2, Lawrence Livermore Laboratory Report UCRL – 79 036, 1977.
41. H. Gutowski, *Kerntechnik* **12** (1970) no. 5/6, 233.
42. Y. W. Wong et al., *Sep. Sci. Technol* **15** (1980) 423.
43. G. D. Sandrock, E. L. Huston, *Chem. Ing. Tech.* **11** (1981) 754.
44. K. B. Wiberg, *Chem. Rev.* **55** (1955) 713.
45. E. A. Evans: *Tritium and its Compounds*, 2nd ed., J. Wiley & Sons, New York 1974.
46. A. Roberts, *Sci. Am.* **206** (1963) no. 6, 94.
47. G. Winnewisser: *Cosmochemistry*, Springer Verlag, Berlin 1973.

48. E. Goebel et al., *Oil Gas J.* **81** (1984, May 7) 215.
49. N. Getoff: *Wasserstoff als Energieträger*, Springer, Wien – New York 1977, p. 5. NASA/ASEE Systems Design Study "Hydrogen Energy Carrier," I, II (1973)
50. H. Bertling, G. Nashan, *Erdöl Kohle Erdgas Petrochem.* **34** (1981) 397 – 401.
51. G. Dalluge, P. Polster, *Chem. Tech. (Leipzig)* **33** (1981) 636 – 640.
52. G. Bernard, J. Vidal, *Pétrole et techniques* **307** (May 1984) 28 – 38.
53. J. F. Meckel, C. Flockenhaus, *Chem. Anlagen + Verfahren* 1981, May, 122 – 138.
54. Y. Osumi, *CEER Chem. Econ. Eng. Rev.* **17** (June 1985) 5 – 20.
55. J. G. Kronseder, M. J. P. Bogard, *Encycl. Chem. Process* **9** (1979) 299 – 328.
56. G. G. Mayfield, V. H. Agreda, *Energy Prog.* **6** (1986) no. 4, 214 – 218.
57. J. F. Clausen, C. A. Zee: *TRW-Systems and Energy*, EPA contract 68–02–2635.
58. A. K. Kuhn, *Chem. Eng. Prog.* (1982) no. 4, 64 – 68.
59. W. N. Clark, R. L. Litzinger, I. R. Straughan, *Energy Prog.* **7** (1987) no. 2, 99 – 104.
60. B. Brunke et al., *Erdöl, Erdgas* **103** (1987) 289 – 293.
61. D. H. Cortez, C. J. La Delfa, *Hydrocarbon Process.* **61** (1981, Feb.) 111.
62. F. A. Clauson, C. P. Marion, *AIChE – IMIQ Energy Meeting*, Acapulco, Oct. 1980.
63. Uhde GmbH, Dortmund, private communication (1988).
64. H. Jungfer, R. Lohmüller, *Erdöl Kohle Erdgas Petrochem.* **39** (1986) no. 4, 188 – 1892.
65. C. P. Marion, J. R. Muenger, AiChE, (Houston, Texas, USA, 1981) 4.
66. H.-J. Madsack, *Hydrocarbon Process.* **61** (1982) no. 7, 169 – 172.
67. Y. Shimizu, *CEER Chem. Econ. Eng. Rev.* **10** (1982) no. 7, 9 – 14.
68. Linde AG, DE 34 14 716.0, 1984 (R. Lohmüller, M. Heisel, P. Hesse, U. Lahne).
69. H. Jungfer, *Linde Reports on Science and Technology* **40** (1985) 14 – 20.
70. R. M. Eccles, A. M. Gray, W. B. Livingston, *Oil Gas J.* **79** (1982, Apr. 12) 123 – 129.
71. Osaka Gas Corp. JP 108 1726, 30, 34.
72. G. W. Bridger, *Chem. Process Eng. (London)* **53** (1972) 38.
73. *Catalyst Handbook* ICI, Wolfe Scientific Books, London 1972.
74. J. Rostrup-Nielsen, *Chem. Eng. Prog.* **73** (1977) no. 9, 87 – 92.
75. Toyo Engineering, US 4 025 457, 1977 (T. Tomita, K. Kikuchi, T. Sakamoto).
76. R. G. Minet et al., EPRI-Report EM 1487 (1980), EM 2096 (1981)
77. *Nitrogen*, **144** (1983) 33.
78. D. R. Stull, E. F. Westrum, G. C. Sinke: *The Chemical Thermodynamics of Organic Compounds*, Wiley, New York 1969, p. 631 ff. W. D. Seider, R. Gautam, C. W. White: "Computation of Phase and Chemical Equilibrium. A Review," *ACS-Symp. Ser.* **124** (1980) 115 – 134.
79. J. P. van Hook, *Catal. Rev. Sci. Eng.* **21** (1980) no. 1, 1 – 51.
80. J. C. de Deken, E. F. Devos, G. F. Froment, *ACS Symp. Ser.* **196** (1982) 181 – 197.
81. A. P. Murray, T. S. Snyder, *Ind. Eng. Chem. Process Des. Dev.* **24** (1985) 286 – 294.
82. C. P. P. Singh, D. N. Saraf, *Ind. Eng. Chem. Process Des. Dev.* **18** (1979) no. 1, 1 – 7.
83. F. J. Dent et al., *Trans. Inst. Gas Eng.* **95** (1945/46) 602 – 709.
84. S. Paloumbis, E. E. Petersen: "Chemical Reaction Engineering," *ACS Symp. Ser.* **196** (1982) 489 – 497.
85. J. W. Colton, *Hydrocarbon Process.* **60** (1981) no. 1, 177 – 184.
86. D. L. Trimm, *Catal. Rev. Sci. Eng.* **16** (1977) no. 2, 155 – 190.
87. K. H. Brachthäuser, R. R. J. Jungerhans, H. Tielen, *Gas Wärme Int.* **22** (1973) no. 6, 209 – 214.
88. M. R. Agarwal, T. Bajpai, *Chem. Age India* (1977) no. 11, 995 – 1010.
89. A. Watson, *Hydrocarbon Process.* **62** (1983) no. 3 91 – 95.
90. H. D. Marsch, J. J. Herbort, *Hydrocarbon Process.* **61** (1982) no. 6, 101 – 105.
91. *Ann., Nitrogen* **166** (1987) no. 2, 24 – 31.
92. W. Balthasar, D. J. Hambleton, *Int. J. Hydrogen Energy* **5** (1980) 21 – 31.
93. W. F. van Weenen, J. Tielrooy, Proc., 4th World Hydrogen Energy Conf., Pasadena, California, USA, 1982.
94. S. P. Goff, S. I. Wang, *Chem. Eng. Prog.* (1987) no. 8, 46 – 53.
95. J. L. Heck, T. Johansen, *Hydrocarbon Process.* **57** (1978) no. 1, 175 – 177.
96. S.-J. Wang, *Oil Gas J.* **80** (1982) no. 11, 55 – 62.
97. J. R. Rostrup-Nielsen, H. Stahl, N. R. Udengaard, Fuel Cell Seminar, Tucson, Arizona, USA, 1985.

98. Endurance Testing of a High-Efficiency Steam Reformer for Fuel Cell Power Plants, EPRI AP-6071, Project 2192–1 Final Report, October 1988.
99. United Technologies Corp., US 4 071 330, 1978 (R. A. Sederquist).
100. J. Singh, H. F. Nielsen, R. Streicher, *Brennst. Wärme Kraft* **33** (1981) 412 – 416.
101. L. Silberring, Proc. of British Sulphur Corp., 4th Conf., paper 5, London, 1981, pp. 93 – 112.
102. M. Oertel et al. *Chem. Eng. Technol.* **10** (1987) 248 – 255.
103. E. J. Nobles in A. V. Sluck, G. Russel James (eds.): *Ammonia*, vol. **I**, Marcel Dekker, New York 1973, pp. 275 – 290.
104. M. Fytzani-Stephanopoulos, G. E. Voecks, *Energy Progress* **1** (1981) nos. 1 – 4, 52 – 58.
105. Alsands Projekt, *Oil Gas J.* **78** (1980) no. 24, 61.
106. G. R. Charamonte, R. Sharma, *Hydrocarbon Process.* **62** (1982) no. 9, 255 – 257.
107. R. R. Dean, J. L. Mauleon, W. S. Letzsch, *Oil Gas J.* **80** (1982) no. 40, 75 – 80; no. 41, 168 – 176.
108. Atlantic Richfield Comp., G. P. Masologites, L. H. Beckberger, R. R. Edison, company leaflet, 1974, Harvey, Illinois, United States.
109. R. Müller, Proc. World Hydrogen Energy Conf., 4th, Pasadena, California USA, 1982.
110. J. G. Wragg, M. A. Kaleel, C. S. Kim, *Coal Processing Technology VI, Am. Inst. Chem. Eng.* (1980) 186 – 192.
111. H. Wendt in C. J. Winter, J. Nitsch (eds.): *Wasserstoff als Energieträger*, Springer Verlag, Berlin 1986, p. 179.
112. C. Carpetis, *Dtsch. Forsch. Versuchsanst. Luft Raumfahrt Nachr.* **34** (1981) 15.
113. H. Wendt, *Chem. Ing. Tech.* **56** (1984) no. 4, 265 – 272.
114. J. Divisek, *Brennst. Wärme Kraft* **38** (1986) no. 11, 512 – 515.
115. H. Vandenborre, R. Leysen, *Electrochim. Acta* **23** (1978) 803 – 804.
116. J. Divisek, P. Malinowski, *J. Electrochem. Soc.* **133** (1986) no. 5, 915 – 920.
117. M. S. Casper, *Chemical Technol*, Review no. 102, Noyes Data Corp. (Park Ridge, N.J., 1978).
118. G. Sandstede, *Chem. Ing. Tech.* **61** (1989) 349 – 361.
119. Brown Boveri, R. Oberlin, M. Fischer, *Technik 8 – 86*, 1986, pp. 445 – 450.
120. Japan's Sunshine Project, *Annual Summary, 1983 – 1986 of Hydrogen Energy*, R& D, Pub. Japan Ind. Tech. Ass., Tokyo 1987.
121. G. Imarisio, A. A. Strub (eds.): *Hydrogen as an Energy Carrier Proc., 3rd Int. Seminar*, Lyon 1983, Dordrecht, Netherlands 1983, pp. 237 – 243.
122. W. Baukal, *Chem. Ing. Tech.* **41** (1969) 791.
123. W. Dönitz, R. Streicher, *Chem. Ing. Tech.* **52** (1980) 436.
124. E. Erdle, W. Dönitz, *VDI-Ber.* **602** (1987) 51 – 51.
125. A. O. Isenber, *Solid State Ionics* (1981) no. 3/4, 431 – 437.
126. K. Iwahara, *Kagaku Sochi* **28** (1986) no. 1, 90 – 91.
127. K. H. Quandt, R. Streicher, *Int. J. Hydrogen Energy* **11** (1986) no. 5, 309 – 315.
128. D. Bergner, M. Hartmann, R. Staab, *Chem. Ing. Tech.* **59** (1987) no. 4, 271 – 280.
129. I. Barin, O. Knacke: *Thermochemical Properties of Inorganic Substances*, Springer Verlag, Berlin – Heidelberg – New York – Düsseldorf 1973.
130. J. E. Funk, R. M. Reinstrom, *Ind. Eng. Chem. Proc. Res. Dev.* **5** (1966) 366.
131. B. M. Abraham, F. Schreiner, *Ind. Eng. Chem. Fundam.* **13** (1974) 30.
132. H. Hofmann, *Chem. Ing. Tech.* **48** (1976) 87.
133. G. E. Beghi, *Int. J. Hydrogen Energy* **10** (1985) 431.
134. H. Engels, J. E. Funk, K. Hesselmann, K. F. Knoche, *Int. J. Hydrogen Energy* **12** (1987) 291.
135. R. Schulten: *Nuclear Energy as a Primary Energy Source for Hydrogen Production*, 2nd World Hydrogen Conference, Zürich 1978.
136. M. G. Bowman: *Interfacing Primary Heat Sources and Cycles for Thermochemical Hydrogen Production*, 3rd World Hydrogen Energy Conference, Tokyo 1980.
137. C. E. Bamberger, D. M. Richardson, *Cryogenics* **16** (1976) 197.
138. C. E. Bamberger, D. M. Richardson, *Cryogenics* **18** (1978) 170.
139. G. DeBeni, *J. Electrochem. Soc.* **128** (1982) 1.
140. G. E. Besenbruch et al.: *Hydrogen Production by GENERAL ATOMIC Sulfur Iodine Process. A Progress Report*, 3rd World Hydrogen Energy Conference, Tokyo 1980.
141. K. F. Knoche, H. Schepers, K. Hesselmann: Second Law and Cost Analysis of the Oxygen Generation Step of the GENERAL ATOMIC Sulfur-Iodine Cycle. Proceedings of the 5th World Hydrogen Energy Conference, Toronto 1984

142. H. Engels, K. F. Knoche, M. Roth: *Direct Dissociation of Hydrogen Iodide—An Alternative to the GENERAL ATOMIC Process*. Proceedings of the 6th World Hydrogen Energy Conference, Vienna 1986.
143. S. Sato et al. in : T. N. Veziroglu, J. B. Taylor (eds.): "Studies on the Nickel-Iodine-Process for Hydrogen Production III," *Hydrogen Energy Progress V*, vol **2**, Pergamon Press, New York 1984, pp. 457 – 465.
144. S. Shimizu, *Int. J. Hydrogen Energy* **12** (1987) 687.
145. K. F. Knoche, J. E. Funk, *Int. J. Hydrogen Energy* **2** (1977) 377, 387.
146. J. M. Sedlak et al., *Hydrogen production using solid-polymer-electrolyte technology for water electrolysis and hybrid sulfur cycle*, General Electric Company, Wilmington, Mass. and Electric Power Research Institute, Palo Alto, CA. (ed.), EM-1185, Research Project 1086–3, 1979, pp. 6/1–8-1.
147. K. Petrov, I. Nikilov, T. Vitanov, *Int. J. Hydrogen Energy* **10** (1985) 245.
148. B. D. Struck, et al. in G. Imarisio, A. S. Strub (eds.): *Hydrogen as an energy carrier*, Development and scaling up of an electrolytic cell for the anodic oxidation of sulphur dioxide and cathodic production of hydrogen for the sulphuric acid hybrid cycle: EUR 8651, EUR 8300 D. Reidel Publishing Company, Dordrecht, 1983, pp. 35 – 45.
149. E. Bilgen, C. Bilgen, *Int. J. Hydrogen Energy* **11** (1986) 241.
150. O. M. Bockris, B. Danapani, D. Cocke, J. Ghoro-ghchian, *Int. J. Hydrogen Energy* **10** (1985) 179.
151. J. Lede, F. Lapique, J. Villermaux, *Int. J. Hydrogen Energy* **8** (1983) 675.
152. H. H. G. Jellinek, H. Kachi, *Int. J. Hydrogen Energy* **9** (1984) 677.
153. J. Lede et al., *Int. Chem. Engineering* **26** (1986) 647.
154. J. Lede, J. Villermaux, R. Ouzane, M. A. Hossain, R. Ouahes, *Int. J. Hydrogen Energy* **12** (1987) 3.
155. A. Farhataziz, M. A. Rodgers: *Radiation Chemistry*, VCH Verlagsgesellschaft, Weinheim, Germany 1987.
156. A. Danno, *CEER Chem*, Econ. Eng. Rev. (1974) 7.
157. W. Kerr, D. P. Majumdar in T. N. Veziroglu (ed.): *Hydrogen Energy*, Part A, Plenum Press, New York 1975, pp. 167.
158. J. W. T. Spinks, R. J. Woods: *An Introduction to Radiochemistry*, J. Wiley & Sons, New York, 1964.
159. I. Tanaka, T. Carrington, H. P. Broida, *J. Chem. Phys.* **35** (1961)
160. K. Kalyanasundaram, M. Grätzel, *Angew. Chem. Int. Ed. Engl.* **18** (1979) 70.
161. M. Grätzel, *Ber. Bunsenges. Phys. Chem.* **84** (1980) 981.
162. M. Tomkiewicz, H. Fay, *Appl. Phys.* **18** (1979) 1.
163. H. Gerischer, W. Mindt, *Electrochim. Acta* **13** (1968) 1329.
164. K. Kalyanasundaram, E. Pelizetti, M. Grätzel, *Coord. Chem. Rev.* (1989) in print.
165. D. Duhong, N. Serpone, M. Grätzel, *Helv. Chim. Acta* **67** (1984) 1012.
166. P. Candon, *Nature (London)* **262** (1976) 715.
167. E. N. Kondratieva, I. N. Gogotov in A. Fiechetr (ed.) *Adv. Biochem. Eng. Biotechnol.* **28** (1983) 139 – 191.
168. J. M. Olson, J. D. Bernstein, *Ind. Eng. Chem. Prod. Res. Dev.* **21** (1982) 640.
169. H. Gest, M. D. Kamen, *Science (Washington, D.C.)* **109** (1949) 558.
170. R. Bollinger, H. Zürrer, R. Bachofen, *Appl. Microbiol. Biotechnol.* **23** (1985) 147.
171. A. Daday, A. H. Mac Kerras, G. D. Smith, *J. Gen. Microbiol* **131** (1985) 231.
172. K. K. Rao, L. Rosa, D. O. Hall, *Biochem. Biophys. Res. Commun.* **68** (1976) 21.
173. *Techno Japan* **19** (1986) no. 7, 104.
174. P. B. Tarman, R. Biljetina: *The Steam-Iron-process for Hydrogen Production*, 85th National Meeting of the AIChE, Philadelphia 1978.
175. W. H. Seitzer, US 3 928 550, 1975.
176. D. C. Erickson: *Hydrogen from Coal via Tin Redox Process*, Final Report; Energy Concepts Company, Annapolis, USA 1981.
177. G. Kurz, *Proc*, Eng. (1976, Oct.) 97.
178. G. Strickland, *Int. J. Hydrogen Energy* **9** (1984) 759.
179. T. Yamamoto, *CEER Chem. Econ. Eng. Rev.* **13** (1981) no. 1 – 2, 11.
180. J. C. Amphlett et al., *Can. J. Chem. Eng.* **59** (1981) 720.
181. J. C. Amphlett, M. J. Evans, R. F. Mann, R. D. Weir, *Can. J. Chem. Eng.* **63** (1985) 605.
182. K. Restin, P. Jurkat, H. Hiller, *GWF Gas Wasserfach Gas Erdgas* **123** (1982) 105.
183. R. W. Bartlett: *Preliminary Evaluation of Processes for Recovering Hydrogen from Hydrogen Sulfide*, File No. 79–447, SRI International, July 1979, p. 55.
184. M. E. D. Raymond, *Can. Sulfur Symp. Calgary*, Canada 1974.

185. Y. Kotera, N. Todo, K. Fukuda, US 3 962 409, 1976.
186. T. Chivers, J. B. Hyne, C. Lau, *Int. J. Hydrogen Energy* **5** (1980) 499.
187. W. C. Chen, US 4 066 739, 1978.
188. M. Dokiya, H. Fukuda, T. Kameyama, *Bull. Chem. Soc. Jpn.* **51** (1978) 150.
189. I. G. Nixon, *Chem. Br.* **May 5**, (1974) 179.
190. T. Chivers, C. Lau, *Int. J. Hydrogen Energy* **12** (1987) 561.
191. T. Kameyama, *Int. J. Hydrogen Energy* **8** (1983) 5.
192. S. A. Naman, S. M. Aliwi, K. Al-Emara, *Int. J. Hydrogen Energy* **11** (1986) 33.
193. H. Kalenda, G. Ruckelhaus, BMFT-Forschungsbericht T 81–1012 (1981).
194. J. Schulze, H. Gaensslen, *Chem. Ind.* **36** (1984) no. 3, 135 – 140;no. 4, 202 – 208.
195. R. Lohmüller, *Chem. Ind.* **36** (1984) no. 3, 147 – 151.
196. G. Bauer in [126], p. 195
197. C. R. Baker, NASA Contractor Report 159 163 (1979).
198. A. L. Kohl, F. C. Riesenfeld: *Gas Purification*, 4th ed., Gulf Publishing, Houston 1985.
199. H. Baldus, K. Baumgärtner, H. Knapp, M. Streich, "Verflüssigung von Gasen," in *Winnacker, Küchler*, 4th ed., vol. **2**, Hanser Verlag, Wien – München 1983.
200. *Landolt-Börnstein*, **IV, 2 c** , Springer Verlag, Berlin – Heidelberg – New York 1980.
201. M. G. Zellner, J. M. Claitor, J. M. Prausnitz, *Ind. Eng. Chem. Fundam.* (1970) no. 9, 549 – 564.
202. H. C. Rowles, D. M. Nicholas, H. L. Vines, M. F. Hilton, *Energy Prog.* **61** (1986) no. 3, 25 – 32.
203. W. Förg, *Chem. Process Eng. (London)* **52** (1971) no. 2, 57 – 68.
204. A. Haslam, P. Brook, H. Isalski, *Hydrocarbon Process.* **55** (1976) no. 1, 103 – 106.
205. T. Matsuoka, *Chem. Age India* **30** (1979) no. 3, 119 – 128.
206. W. Scholz, *Linde-Ber. Tech. Wiss.* **45** (1979) 9 – 17
(LINDE Reports on Science and Technology).
207. *Technical Data Book of Petroleum Refining*, vol. **2**, American Petr. Inst. 1982, pp. 9 – 17.
208. H. Becker et al., *Ger. Chem. Eng.* **7** (1984) no. 2, 91 – 101.
209. Petrocarbon, GB 10 189.71, 1971 (K. S. Doherty).
210. B. J. Grotz, *Hydrocarbon Process.* **46** (1967) no. 4, 197 – 202.
211. E. Karwat, *Erdöl Kohle Erdgas Petrochem.* **17** (1964) 439 – 447.
212. R. Fabian, D. Tillmann, *CPP Ed. Europe* (1988) no. 3, 35 – 37.
213. J. S. Davis, J. R. Martin, *Chem. Eng. Prog.* **76** (1980) , no. 2, 72 – 79.
214. S. I. Wang, D. M. Nicholas, S. P. DiMartino, *Oil Gas J.* **82** (1984) no. 5, 111 – 117.
215. With permission of W. Schmid, LINDE AG Haus der Technik Vortrag 1985.
216. W. Scholz, *DECHEMA Monogr.* **58** (1968) 31.
217. W. Förg, *GWF Gas Wasserfach: Gas/Erdgas* **113** (1972) 538 – 540.
218. W. Förg, *Chem. Anlagen + Verfahren* 1970, no. 3, 33 – 44.
219. D. W. Breck: *Zeolite, Molecular Sieves*, J. Wiley & Sons, New York 1974.
220. D. M. Ruthven: *Principles of Adsorption and Adsorption Processes*, J. Wiley & Sons, New York 1974.
221. A. Mersmann, U. Münstermann, J. Schadl, *Chem. Ing. Tech.* **55** (1983) 446 – 458.
222. K. Knoblauch, H. Jüntgen, W. Peters, *Erdöl Kohle Erdgas Petrochem.* **32** (1979) no. 12, 551 – 556.
223. J. H. Collins, W. C. Miller, J. E. Philcox, *Union Carbide Corp., Air Poll. Contr. Assoc., 65th Meeting*, Miami Beach 1972.
224. F. G. Wießner, *Gas Separation and Purification* **2** (1980) no. 3, 115 – 119.
225. E. Richter, K.-B. Harder, K. Knoblauch, H. Jüntgen, *Chem. Ing. Tech.* **56** (1984) no. 9, 684 – 691.
226. Union Carbide, US 3 986 849, 1975 (A. Fuderer, E. Rudelstorfer).
227. D. H. Werner, G. A. Schlichtharle, *Ammonia Plant Saf.* **24** (1980) 12 – 18
228. A. Watson, *Hydrocarbon Process.* **62** (1983) no. 3, 91 – 95.
229. F. J. Brykowski (ed.): *Ammonia and Synthesis Gas, Recent Energy-Saving Processes*, Noyes Data Corp., Park Ridge, New Jersey 1981, pp. 130 – 147.
230. D. S. Newsome, *Catal. Rev. Sci. Eng.* **21** (1980) no. 2, 275 – 318.
231. F. J. Brykowski (ed.), [229], pp. 147 – 156.
232. J. M. Moe, *Chem. Eng. Prog.* **58** (1962) no. 3, 33 – 36
233. F. J. Brykowski (ed.), [229], 156 – 162.
234. P. N. Hawker, *Hydrocarbon Process.* **61** (1982) no. 4, 183 – 187.
235. E. Kuijpers, *Appl. Catal.* **25** (1986) 139 – 147.
236. W. van der Wal, E. Kuijpers, P. Berben, J. W. Gens, *Proc. Int. Gas Res. Conf.*, 1986, Toronto, pp. 1134 – 1143.

237. D. W. Allen, W. H. Yen, *Chem. Eng. Prog.* **69** (1973) no. 1, 75 – 79.
238. Engelhard Min. & Chem., US 4 238 468, 1980.
239. J. H. Cramer, L. E. Thompson, T. H. Hsiumg, W. T. McShea, 2nd Latin American Petrochemical Congress, Mexico City, Nov. 1978.
240. J. C. Bonacci, T. G. Otchy, *AIChE Symp*. (Denver, Co., Aug. 1977).
241. R. Assmann, *GWF Gas Wasserfach: Gas/Erdgas* **121** (1980) no. 1, 23 – 27.
242. A. L. Kohl, F. C. Riesenfeld (eds.): *Gas Purification*, 4th ed., Gulf Publishing Company Book Division, Houston – London – Paris – Tokyo 1985.
243. S. A. Newman (ed.): *Acid and Sour Gas Treating Processes*, Gulf Publishing Company Book Division, Houston – London – Paris – Tokyo 1985.
244. H. W. Schmidt, H. J. Henrici, *Chem. Ztg.* **96** (1972) 154.
245. R. N. Tennyson, R. P. Schaaf, *Oil Gas J.* **75** (1978) 78.
246. Proc. Symp. Ammonia from Coal, TVA Muscle Shoals, May 1979.
247. LINDE AG, US 4 332 596, 1982 (G. Ranke).
248. K. Takeuchi, K. Matsumura, K. Yaginuma, *Fluid Phase Equilib.* **14** (1983) 255.
249. G. Ranke, *Linde Reports on Science and Technology* **18** (1973) 7.
250. W. Scholz, *Linde Reports on Science and Technology* **30** (1979) 9.
251. G. E. Pack: *Investigation of Sulfur Removal Using Direct Oxidation Processes*, 78th Annual Meeting of the Air Pollution Control Association, Detroit June 1985.
F. Rosendahl, *Erdöl Kohle Erdgas Petrochem.* **34** (1981) 132.
252. M. Heisel, F. J. Marold, *Hydrocarbon Process.* **66** (1987) 35.
253. *Ullmann*, 4th ed., **1**, 134.
254. *Kirk Othmer*, **7**, 639.
255. G. J. Grashoff, C. E. Pilkington, C. W. Corti, *Platinum Met. Rev.* **27** (1983) 157.
256. Matthey Metals Ltd, Company Brochure, Diffusion Units.
257. "Special Report: Permeation – Membrane Separation," *Hydrocarbon Process.* **62** (1983) no. 8, 43 – 62.
258. S. Egli, A. Ruf, A. Buck, *Swiss Chem.* **6** (1984) 90.
259. A. K. Fritsche, R. S. Narayan, *CEER Chem. Econ. Eng. Rev.* **19** (1987) nos. 1, 2, 3 (19).
260. R. Rautenbach, W. Dahm, *Chem. Eng. Process.* **21** (1987) 141.
261. *Hydrogen Separation Systems, PRISM Separators*, Monsanto, Company Brochure, 1981.
262. D. L. Mac Lean, C. E. Prince, Y. C. Chae, *Chem. Eng. Prog.* **76** (1980) March, no. 98.
263. R. Barron: *Cryogenic Systems*, McGraw-Hill, New York 1966.
264. H. W. Wooley, R. B. Scott, F. G. Brickwedde, *Journal Res. NBS* **41** (1948) 379, RP 1932.
265. J. A. Barclay, W. A. Steyert, *Magnetic Refrigeration for Space Applications, Report on a Design Study, Los Alamos Sci. Lab. Rep.* **LA-8134** (1980).
266. T. Hasimoto, T. Numasawa, M. Shino, T. Okada, *Cryogenics* 21 (1981) 647.
267. H. Blechschmidt, *Kälte* **9** (1976) 357.
268. C. L. Newton, *Chem. Process. Eng. (London)* **48** (1967) no. 12, 51 – 58.
269. G. G. Haselden: "Refrigeration and Liquefaction Cycles," in G. G. Haselden (ed.): *Cryogenic Fundamentals*, Academic Press, London 1971, pp. 17 – 89.
270. W. Peschka: *Flüssiger Wasserstoff als Energieträger*, Springer Verlag, Wien – New York 1984, pp. 33 – 37.
271. H. Gutowski, M. Wanner, *Haus Tech. Vortragsveröff.* **448** (1982) 60 – 64.
272. C. R. Baker, R. L. Shanner: "A Study of the Efficiency of Hydrogen Liquefaction," *Int. J. Hydrogen Energy* **3**, (1978) 321 – 334.
273. J. A. Barclay, ASME Paper 81-HT-82, 20th Joint ASME/AiChE National Heat Transfer Conf., Milwaukee, Wisc., Aug 1981.
274. W. A. Steyert, *J. Appl. Phys.* **49** (1978) 1227 – 1230.
275. J. G. Bednorz, K. A. Müller, *Z. Phys. B: Condens. Matter Quanta* **64** (1986) 189.
276. R. O. Voth, *Cryogenics* **25** (1985) 511 – 517.
277. C. Sindt, *Cryogenics* **10** (1970) 372.
278. W. Tunn, *Erdöl Kohle Erdgas Petrochem.* **26** (1973) 498.
279. O. Bernauer, C. Halene, *J. Less Common Met.* **131** (1987) 213.
280. E. Turnwald, *LINDE Ber. Techn. Wiss.* **36** (1975) 15.
281. W. Peschka, *Int. J Hydrogen Energy* **7** (1982) 661 – 670.
282. D. T. Wade, L. L. Ansell, W. R. Epperly, *Chem. Tech. (Heidelberg)* **12** (1982) 242.
283. K. Baumgärtner, R. Ewald, *Chem. Ing. Tech.* **59** (1987) 296.
284. G. Kaske, H. G. Fasold, P. Schmidt in D. Behrens (ed.): *Transport- und Verteilungsleitungen in Wasserstofftechnologie*, DECHEMA, Frankfurt/Main 1986, p. 462.

285. W. Diehl, *Gas Aktuell* **16** (1978) 20.
286. G. G. Leth: *Transmission of Gaseous Hydrogen*, Messer Griesheim, Company Brochure.
F. J. Edeskuty, K. O. Williamson "Liquid Hydrogen Storage and Transmission," in E. Cox, K. D. Williams Jr. (eds.): *Hydrogen, Its Technology and Implications*, vol. **2**, CRC Press, Boca Raton 1979.
287. G. Beghi et al.: *Hydrogen, Oxygen and Natural Gas by Pipelines*, Comparative Transport Costs. Rep. EUR-5103 e, Euratom-C.C.R., Ispra (Italy) 1973.
288. G. D. Brewer (ed): *LH2 Airport Requirements Study*, NASA CR 2700, Oct. 1976.
289. C. Carpetis in C. J. Winter, J. Nitsch (eds.): *Wasserstoff als Energieträger*, "Speicherung, Transport und Verteilung von Wasserstoff," Springer Verlag, Berlin – Heidelberg – New York – Tokyo 1986, p. 245.
290. C. Carpetis, *Int. J. Hydrogen Energy* **7** (1982) 191.
291. L. Paterson, *Int. J. Hydrogen Energy* **8** (1983) 53.
292. J. A. Paivanas, O. P. Roberts, D. I. J. Wang, *Adv. Cryog. Eng.* **10** (1965) 197.
293. W. Peschka (ed.): *Flüssiger Wasserstoff als Energieträger*, Springer, Wien – New York 1984.
294. J. Hord, W. R. Parrish in: K. E. Cox, K. D. Williamson (eds.): *Hydrogen—Its Technology and Implications*, "Economics of Hydrogen," vol 5, CRC Press, Boca Raton 1979.
295. N. Hallet: *Study, Cost and System Analysis of Liquid Hydrogen Production*, NASA—Rep. CR 73–226, 1968.
296. H. R. Gray et al.: *Potential Structural Materials Problems in a Hydrogen Energy System*, NASA TM-X71 752, June 1975.
297. R. A. Oriani, J. P. Hirth, M. Smialowski (eds.): *Hydrogen Degradation of Ferrous Alloys*, Noyes Publications, Park Ridge, USA 1985.
298. W. Thomson, I. M. Bernstein (eds.): *Effect of Hydrogen on Behaviour of Metals*, Metal Soc. AIME, New York 1976.
299. C. G. Interrante, G. M. Pressouvre (eds.): *Current Solutions to Hydrogen Problems in Steel*, ASM Metals Park, Ohio 1982.
300. J. Eastman et al. in M. Bernstein, A. W. Thomson (eds.): *Hydrogen Effects in Metals*, AIME, New York 1981, p. 397.
301. C. S. Carter: *ARPA Handbook on Stress Corrosion and Corrosion Fatigue*, "Stress Corrosion Cracking and Corrosion Fatigue of Medium-Strength and High-Strength Steels," 1977.
302. G. A. Nelson: *Hydrogen Plant Steels*, Proc. API 29 M (III) (1949) 163.
303. W. A. Bonner, *Oil Gas J.* **77** (1977, July 25) 172.
304. F. H. Vitovec: *The Groth Rate of Fissures During Hydrogen Attack of Steels*, Proc. API 44 III 179 (1964).
305. W. Gayk: "Werkstoffauswahl bei Heißgasbeanspruchung," *DECHEMA Monogr.* **87** (1980) 73.
306. B. A. Hands (ed.): *Cryogenic Engineering*, Academic Press, London 1986.
307. D. Ervans, J. T. Morgan in [306] p. 271.
308. R. V. Homsy, C. A. Glaton, *Review of Literature on Catalytic Recombination of Hydrogen Oxygen*, ORNTL-MT 55, May 1968.
309. M. P. Sherman: *The Behaviour of Hydrogen During Accidents in Light Water Reactors*, Sandia Laboratories, NUREG/CR-1561, August 1980.
310. H. Karwat: *Hydrogen Mitigation*, Report at CEC Brussel, Belgium 1982.
311. L. B. Thompson, J. J. Haugh, R. G. Zalosh, *Nucl. Saf.* **25** (1984) 350.
312. R. Heck, *Atomkernenerg. Kerntech.* **53** (1988) no. 1, 56.
313. NASA Lewis Research Center, *Hydrogen Safety Manual*, NASA Tech. Memo TM-X 52 454 (1968).
314. J. Hord, *Int. J. Hydrogen Energy* **3** (1978) 157.
315. K. M. Kalyanam, D. R. Hay: *Safety Guide for Hydrogen*, National Research Council Hydrogen Safety Committee, Ottawa 1987.
316. R. L. Custer, R. G. Bright: *Fire Detection*, State of the Art, NASA CR 134 642, NBS TN 839 June 1974.
317. H. Eichert, M. Fischer, *Int. J. Hydrogen Energy* **11** (1986) 117.
318. W. Balthasar, J. W. M. van Rijnsoever: *Hydrogen is Safe*, KTI Publication, Zoetermeer, NL 1981.
319. K. Baumgärtner, R. Ewald, *Chem. Ing. Tech.* **59** (1987) 296.
320. J. Hord, *Int. J. Hydrogen Energy* **5** (1980) 579.
321. Occupational Safety and Health Act of 1970, PL 91–596, in United States Statutes at Large, *91st Congress*, Second Session 84, Part 2, US Government Printing Office, Washington, DC 1971, p. 1590.
322. C. Gentry, R. Schott, *Anal Chem.* **42** (1970) 7.
323. M. Riederer, W. Sawodny, *J. Chromatogr.* **179** (1979) 337.

324. K. Fujita, T. Kwan, *Int. Chem. Eng.* **8** (1968) 552.
325. C. Laycock, B. Foxall, *Iron and Steel Int.* (1978, Aug.) 223.
326. J. Plessers, R. Maes, E. Vangelooven, *Stahl Eisen* **108** (1988) 85.
327. Bruker Analytische Messtechnik, Company Brochure, *Bruker Minispec Application Notes*, Karlsruhe 1987.
328. J. Schulze, H. Gaenssten, *Chem. Ind.* **36** (1984) no. 3, 135 – 140; no. 4, 202 – 208. M. A. S. Guth, *Int. J. Hydrogen Energy* **10**, (1985) no. 1, 1 – 10.
329. H. Kalenda, G. Ruckelshauss, (Bundesministerium für Forschung und Technologie) – Forschungsbericht T 81–012 (1981).
330. G. Kaske: *Wasserstofftechnologie*, DECHEMA Studie, Frankfurt/Main 1986, p. 488.
331. H. G. Eickhoff, D. Martinsen, M. Walbeck, *Int. J. Hydrogen Energy* **9** (1984) 232.
332. S. Kasper, *Int. J. Hydrogen Energy* **8** (1983) 183.
333. *Chem. Bus. Suppl. of Chem. Market. Reporter* **11** (1985) 13.
334. M. A. S. Guth, *Int. J. Hydrogen Energy* **10** (1985) 1.
335. Y. Osumi, *CEER Chem. Econ. Eng. Rev.* (1985) June no. 5.
336. E. Wicke, *Chem. Ing. Tech.* **54** (1982) 41.
337. M. Fischer, G. Kreysa, G. Sandstede, *Int. J Hydrogen Energy* **12** (1987) 39.
338. W. Van Deelen: *Proc. 3rd World Energy Conference*, vol. **4**, Tokyo 1980, p. 2323.
339. J. G. Santangelo, G. T. Chen: "Hydrogen Recovery with Metal Hydrides," *ACS Symposium on Advances in Hydrogen Manufacture*, Los Angeles 1982.
340. T. Grundt, K. Christiansen, *Int. J. Hydrogen Energy* **7** (1982) 247.
341. L. Green Jr. *Int. J. Hydrogen Energy* **7** (1981) 335.
342. H. L. Blomelburg, *Plant Oper. Prog.* **1** (1982) 175.
343. H. F. Mason, R. S. Tolberg, *AIChE Symp. Ser.* **148** (1975) no. 71, 220.
344. H. J. Satrina (ed.): *Hydroprocessing Catalyst for Heavy Oil and Coal*, Noyes Data Corp., Park Ridge, NJ, 1982.
345. International Refining Catalyst Compilation 1987, *Oil Gas J.* **85** (1987, Oct. 5) 41.
346. 1986 Refining Process Handbook, *Hydrocarbon Process.* **65** (1986) no. 9, 83.
347. R. A. Meyers (ed.): *Handbook of Petroleum Refining Processes*, McGraw Hill, New York 1986.
348. M. Kuno, *Hydrocarbon Process.* **60** (1981) 124.
349. B. Schütze, H. Hofmann, *Erdöl Kohle Erdgas Petrochem.* **36** (1983) 457.
350. W. Krönig, Kohlehydrierung in J. Falbe (ed.): *Chemierohstoffe aus Kohle*, Thieme Verlag, Stuttgart 1977.
351. E. E. Donath, History of Catalysis in Coal Liquefaction, in J. R. Anderson, M. Bondart (eds.): *Catalysis*, vol. **3**, Springer Verlag, Berlin – Heidelberg – New York 1982, p. 1.
352. P. Nowacki (ed.): Coal Liquefaction Processes, Noyes Data Corp., New Jersey 1979, pp. 76 – 159.
353. S. Ueda, Y. Miki, M. Naka, M. Wada, Status of Synfuel Development in Japan, *19th IECEC*, San Francisco, CA, 1984.
354. K. H. van Heek, W. Wanzl, *Erdöl Erdgas* **105** (1989) 30.
355. R. Fladerer, L. Schrader, *Chem. Ing. Tech.* **54** (1982) 884.
356. J. Falbe (ed.): *Chemierohstoffe aus Kohle*, Thieme Verlag, Stuttgart 1977.
357. J. Fahey, "Industrial Chemicals via C_1-Processes," *ACS Symp. Ser.* **328** (1986) .
358. J. Falbe (ed.): *New Syntheses with Carbon Monoxide*, Springer Verlag, Berlin – Heidelberg – New York 1980.
359. F. Asinger (ed.): *Methanol, Chemie- und Energierohstoff*, Springer Verlag, Berlin – Heidelberg – New York – London – Paris – Tokyo 1986.
360. C. D. Frohning et al. in [357], Chap. 8, pp. 219 – 299.
361. Ch. Masters, *Adv. Organomet. Chem.* **17** (1979) 61 – 103.
362. M. A. Vanice, *Catal. Rev. Sci. Eng.* **14** (1976) 153.
363. H. C. Anderson, J. L. Wiley, A. Newall, *Bibliography of the Fischer – Tropsch – Syntheses*, Bull. 544, Bureau of Mines, United States Goverment Printing Office, Washington 1954.
364. M. E. Dry, *CHEMTECH* **12** (1982) 744.
365. V. U. S. Rad, R. J. Germly, *Hydrocarbon Process.* **59** (1980) no. 11, 139.
366. L. König, J. Gaube, *Chem. Ing. Tech.* **55** (1983) 14.
367. C. D. Frohning, Polymethylene Synthesis in J. Falbe (ed.): *New Syntheses with Carbon Monoxide*, Springer Verlag, Berlin – Heidelberg – New York 1980.

368. F. W. Koeller, H. Roberts, B. Britz, *Hydrocarbon Process.* **53** (1974) no. 4, 69.
369. B. Cornils: "Hydroformylation, Oxo Synthesis, Roelen Reaction" in J. Falbe (ed.): *New Syntheses with Carbon Monoxide*, Springer Verlag, Berlin – Heidelberg – New York 1980.
370. H. Bahrmann, B. Cornils, *Chem. Ztg.* **104** (1980) 39.
371. R. L. Augustine, "Organic Functional Group Hydrogenation," *Catal. Rev. Sci. Eng.* **13** (1976) 285.
372. M. Freifelder (ed.): *Practical Catalytic Hydrogenation*, Wiley Interscience, New York 1971.
373. M. Freifelder (ed.): *Catalytic Hydrogenation in Organic Synthesis, Procedures and Commentary*, Wiley Intercience, New York 1978.
374. R. J. Peterson (ed.): *Hydrogenation Catalysts*, Noyes Data Corporation, Park Ridge, NJ 1977.
375. R. Albrecht, A. Strätz, G. Vollheim, *Chem. Ing. Tech.* **52** (1980) 582.
376. R. Steffen, H. B. Lüngen, *Stahl Eisen* **108** (1988) 339.
377. E. Mazank, A. Brachany, C. Bryk, *Stahl Eisen* **102** (1982) 3.
378. F. Habashi, R. Dugdale, N. Nagmori, *Metall (Berlin)* **28** (1974) 1051.
379. Rockwell Int. Corp., DE-OS 30 428 878, 1981 (J. Friedmann et al.).
380. W. Pötke, R. Jeschdar, G. Kehse, *Stahl Eisen* **108** (1988) 581.
381. U. J. Gährs, P. Rutten, G. Schnorr, *Gas Aktuell*, Messer Griesheim brochure, Frankfurt 1987.
382. U. Gieger et al., *Cryogenics* **11** (1976) 451.
383. P. Hoffmann: *The Forever Fuel*, Westview Press, Boulder, CO, 1981.
384. G. M. Woodwell, *Sci. Am.* **238** (1978) no. 1, 34 – 44.
385. C. D. Keeling et al.: "Atmospheric Carbon Dioxide Variations. Hawaii," *Tellus* **28** (1976) no. 6, 538 – 551.
386. J. O. M. Bockris: *Energy: The Solar Hydrogen Alternative*, Wiley & Sons, New York 1980.
387. W. Bach et al. (eds.): *Renewable Energy Prospects*, Pergamon Press, Oxford 1980.
388. H. E. Landsberg, *Sol. Energy* **5** (1961) 95 – 98.
389. C. Voigt in C. J. Winter, J. Nitsch (eds.): *Wasserstoff als Energieträger*, Springer Verlag, Berlin 1986, p. 301.
390. H. Tributsch in H. Scheer (ed.): *Die gespeicherte Sonne*, Piper, München 1987, pp. 119 – 155.
391. J. Cotillon, *Houille Blanche* **37** (1982) 381 – 390.
392. C. Voigt in [389], p. 305.
393. M. Sappa, *Proc. 3rd World Hydrogen Energy Conf.*, vol. **3**, Tokyo 1980, pp. 1373 – 1406.
394. R. L. Le Roy: *The Metallurgical Society of CIM*, annu. vols. 1 – 10, 1978.
395. F. Conrad, *Energie* **40** (1988) no. 6, 46 – 53.
396. H. Wendt, *Chem. Ing. Tech.* **56** (1984) 265 – 272.
397. W. Schnurnberger, W. Seeger, H. Steeb in [389], pp. 205 – 243.
398. W. Doenitz, R. Schmidberger, *Int. J. Hydrogen Energy* **7** (1982) 321 – 330.
399. C. Carpetis, W. Peschka, *Int. J. Hydrogen Energy* **5** (1980) 539.
400. J. S. Noh, R. K. Agarwal, J. A. Schwarz, *Int. J. Hydrogen Energy* **12** (1987) 693.
401. G. Alefeld, J. Völkl (eds.): *Hydrogen in Metals*, vol. I and vol. II. Topics and Applied Physics, vols. 28, 29, Springer Verlag, Berlin – Heidelberg – New York 1978.
402. G. G. Libowitz, G. D. Sandrock (eds.): *Proceedings and Applications of Metal Hydrides*, vols. 1 and 2, Elsevier, Amsterdam 1980.
403. H. Wenzl, *Int. Met. Rev.* **27** (1982) 140.
404. G. D. Sandrock, S. Suda, *** Applications in L. Schlapbach (ed.): *Hydrogen in Intermetallic Compounds*, Springer Verlag, Berlin – Heidelberg – New York 1986.
405. F. A. Kuijpers, H. H. VanMal, *J. Less-Common Met.* **23** (1971) 395.
406. P. D. Goodell, G. D. Sandrock, E. L. Huston, *J. Less-Common Met.* **73** (1980) 135.
407. M. J. Song, M. Pezat, B. Darrier, P. Hagenmüller, *J. Solid State Chem.* **56** (1985) 191.
408. O. Bernauer, C. Halene, *J. Less-Common Met.* **131** (1987) 213.
409. HWT Gesellschaft für Hydrid- und Wasserstofftechnik mbH, Mülheim/Ruhr, company brochure 1986.
410. H. Buchner, *Int J. Hydrogen Energy* **3** (1981) 259.
411. F. B. Hill, Y. W. Wong, Y. N. I. Chan, *AIChe J.* **28** (1982) 1.
412. J. G. Santangelo, G. T. Chen, *Hydrogen Recovery with Metal Hydrides*, ACS Symposium on Advances in Hydrogen Manufacture, Las Vegas 1982.
413. E. L. Houston, *Development of a Commercial Metal Hydride Process for Hydrogen Recovery*, Final Report vols. 1 and 2, MPD Technology Corp., Wyckoff, New Jersey, 1984.

414. L. Schlapbach, M. Groll, *Metal Hydrides for Energy Technologies*, IEA Report Task VII, Storage, Conversion and Safety, March 1986.
415. Ergenics Inc., USA; company brochure.
416. M. Taube et al., *Int. J. Hydrogen Energy* **10** (1985) 595.
417. G. Giacomazzi, CEC Joint Research Centre, Report EUR-11 330 – EN, Ispra (Italy) 1986.
418. K. Hoyermann, H. Janaer, H. G. Wagner, *Ber. Bunsenges. Phys. Chem.* **79** (1975) 858.
419. J. Pangborn, M. C. Scott, *Domestic Uses of Hydrogen in* K. E. Cox, K. D. Williamson, Jr. (eds.): *Hydrogen: Its Technology and Implications*, CRC-Press, Boca Raton, Florida 1979, p. 151.
420. *Einsatzmöglichkeiten neuer Energiesysteme*, Programmstudie des BMFT, part III: Wasserstoff, Bonn 1975.
421. M. Haruta, H. Sano, *Int. J. Hydrogen Energy* **7** (1982) 729, 737, 801.
422. J. L. Sloop, *Liquid Hydrogen as a Propulsion Fuel*, The NASA History Series, BASA-SP-4404, TL 785 S 58, 1978.
423. H. Dederra, E. Kirner, MBB: Vulcain HM60-Thrust Chamber Critical Development Items, 15th ISTS-Congress, Tokyo, May 1986.
424. D. Brewer, *Astronaut. Aeronaut.* **12** (1974) 40.
425. P. Hofmann *The forever Fuel. Hydrogen as Aircraft Fuel*, p. 139, Westview Press, Boulder, CO, 1982.
426. International Symposium (DGLR mit DFVLR) *Hydrogen in Air Transportation*, Sept. 11th to 14th, 1979, Stuttgart.
427. G. D. Brewer, *Int. J. Hydrogen Energy* **7** (1982) 21.
428. E. Reshoto, *J. Aircr.* **16** (1979) 584.
429. G. D. Brewer (ed.): NASA Contractor Report CR 2700, Washington, D.C., 1976.
430. H. P. Alder, *Int. J. Hydrogen Energy* **12** (1987) 571.
431. W. Peschka, *Flüssiger Wasserstoff als Energieträger*, Springer Verlag, Wien – New York 1984, pp. 129 – 184.
432. H. Buchner, *Int. J. Hydrogen Energy* **9** (1984) 501.
433. P. Hofmann: *The Forever Fuel: The Story of Hydrogen*, Westview Press, Boulder, CO, 1982, pp. 105 – 138.
434. BMW AG, *Hydrogen Vehicle, company brochure*, Munich 1986.
435. BMFT Studie, *Neuen Kraftstoffen auf der Spur, Bonn* 1974.
436. L. A. Sinclair, J. S. Wallace, *Int. J. Hydrogen Energy* **12** (1984) 123.
437. H. S. Homan, P. C. T. De Boer, W. J. McLean, *Int. J. Hydrogen Energy* **8** (1983) 131.
438. K. Feucht, R. Povel, W. Gelse, "Wasserstoff-Energietechnik," *VDI Ber.* **602** (1987) 185.
439. G. Withalm, W. Gelse, *The Mercedes Benz Hydrogen Engine for Application in a Vehicle Fleet*, VI World Hydrogen Energy Conference, Vienna 1986.
440. W. Strobl, W. Peschka, "Wasserstoff-Energietechnik", *VDI-Ber.* **602** (1987) 203.
441. H. J. Sternfed, H. Wojkowsky, W. Schnurrenberger, *Brennst. Wärme Kraft* **34** (1982) 351, 401.
442. H. J. Sternfeld, K. Wolfmüller, *VAB Kraftwerkstech.* **66** (1986) 793.
443. H. Liebhafsky, E. J. Cairns: *Fuel Cells and Fuel Cell Batteries*, Wiley, New York 1968.
444. K. K. Ushiba, *CHEMTECH* **14** (1984) 300.
445. H. Wendt, W. Jenseit, *Chem. Ing. Tech.* **60** (1988) 180.
446. K. Kordesch, J. C. T. Olivera, *Int. J. Hydrogen Energy* **13** (1988) 411.
447. W. Dönitz, *State of the Art and Future Developments of Solid Oxide Electrolyte Fuel Cells*, Proceedings of the UNESCO Workshop on Fuel Cells, June 1985.
448. A. P. Fickett, *Int. J. Hydrogen Energy* **8** (1983) 617.
449. S. Knable in E. A. Gillis, (ed.): Fuel Cell Seminar 1986, Program and Abstracts, Tucson Ariz., 1986, pp. 27.
450. N. Itoh, Science & Technology in Japan **5** (1986) no. 18, 16.
451. N. Getoff: *Wasserstoff als Energieträger*, Springer Verlag, Wien – New York 1977.
452. D. Behrens (ed.): *Wasserstofftechnologie. Perspektiven für Forschung und Entwicklung*, DECHEMA, Frankfurt 1986.
453. K. E. Cox, K. D. Williamson (eds.): *Hydrogen, its Technology and Implications*, vols. I – V, CRS Press, 1979.
454. J. Nitsch, C. Voigt in [389], pp. 288 – 310
455. R. Aureille, J. Pottier, *Proc. 5th World Hydrogen Energy Conf.*, vol. **1**, Toronto 1984, pp. 279 – 288.
456. A. G. Barnstaple, A. J. Petrella, Report no. 81 105 and 82 452, Ontario Hydro, Toronto 1981, 1982.
457. G. C. Crawford, A. K. Stuart, *Int. J. Hydrogen Energy* **9** (1984) no. 7, 619 – 625.
458. R. H. Shannon, R. D. Richardson, *Int. J. Hydrogen Energy* **8** (1983) no. 10, 783 – 792.

459. A. J. Petrella, D. Chisholm, A. G. Barnstaple, *Hydrogen study*, vol. 4, Report no. 82 645, Ontario Hydro, Toronto 1982.
460. J. Nitsch, C. Voigt in [389], p. 358.
461. T. Donakowski, C. Blazek, M. Novil, E. Daniels, *Int. J. Hydrogen Energy* **9** (1984) no. 7, 613 – 618.
462. *Hysolar—Solar Hydrogen Production and Utilization*, Projektvereinbarung Riad/Bonn, March 1986.
463. R. Meggle, *DECHEMA Monogr.* **112** (1988) 325 – 534.
464. J. Gretz, J. P. Baselt, O. Ullmann, H. Wendt: "The 100 MW Euro-Quebec Hydro-Hydrogen Pilot Project," *VDI-Rep.* **725** (1989) 81 – 91.
465. C. Marchetti, *Int. J. Hydrogen Energy* **10** (1985) no. 4, 215 – 219.
466. *Solare Wasserstoffenergiewirtschaft*, BMFT-Ausschuß, Bonn, Feb. 1988.
467. International Energy Agency, *Program of Work 1986 – 1989*, Deutsche Forschungs- und Versuchsanstalt für Luft- und Raumfahrt, Köln 1986.
468. *New Uses for H_2 in Canadian Energy Systems*, International Energy Agency, Task VII reports, Nov. 1985.
469. *The Sunshine Project*, Agenca of Ind. Sci. Tech. of MITI, Tokyo 1987.
1986 Annual Summary of Hydrogen Energy R + D, Japan Industrial Technology Association, Tokyo 1987.