United States Patent [19]

Cover

[11] **Patent Number: 4,465,964**

[45] **Date of Patent: Aug. 14, 1984**

[54] **ENERGY CONVERSION SYSTEM**

[76] Inventor: **John H. Cover**, 24742 Via San Fernando, Mission Viejo, Calif. 92691

[21] Appl. No.: **457,627**

[22] Filed: **Jan. 13, 1983**

Related U.S. Application Data

[63] Continuation-in-part of Ser. No. 342,391, Jan. 25, 1982.

[51] **Int. Cl.**[3] **H02N 4/02**; C25B 1/00

[52] **U.S. Cl.** ..... **322/2 R**; 204/59 R; 204/129; 310/11; 310/300

[58] **Field of Search** ..... 322/2 R, 2 A; 310/306, 310/300, 11; 290/43, 54; 323/906; 204/129, 130, 59 R

[56] **References Cited**

U.S. PATENT DOCUMENTS

3,375,664	4/1968	Wells, Jr.	310/11
3,443,129	5/1969	Hammit	310/11
3,616,334	10/1971	Aker et al.	204/129
3,878,410	4/1975	Petrick et al.	310/11
3,999,089	12/1976	Barros	310/11
4,127,453	11/1978	Radebold	310/300 X
4,191,901	3/1980	Branover	310/306 X

FOREIGN PATENT DOCUMENTS

2405134	8/1975	Fed. Rep. of Germany	310/11

Primary Examiner—R. J. Hickey

Attorney, Agent, or Firm—Knobbe, Martens, Olson & Bear

[57] **ABSTRACT**

A system is disclosed for converting one form of energy into an alternate form of energy by means of a low-temperature process. A liquid flow loop with two vertical columns that are interconnected at the top and bottom circulates a fluid. A convective flow of this fluid is established by heating the fluid in one of the columns and cooling the fluid in the other column to establish a weight differential between the fluid in the two columns. An electric generator is placed on this loop so that, as the fluid flows through the loop and through the generator, electrical energy is generated. This electrical energy is used to electrolize a second fluid, such as a solution of sulphuric acid, into gasses such as hydrogen and oxygen. The gasses so generated are used to increase the rate of flow of the fluid, and consequently the rate of electric energy production. In one embodiment, the gasses are injected into the rising column of the fluid to increase the weight differential between the fluid in the two columns and enhance the convective flow of that fluid. These gasses, which contain chemical energy, are then removed from the loop at the top of this column. Alternatively, the gasses can be accumulated at high pressure, and the pressure used to inject a volatile fluid into the loop.

16 Claims, 11 Drawing Figures

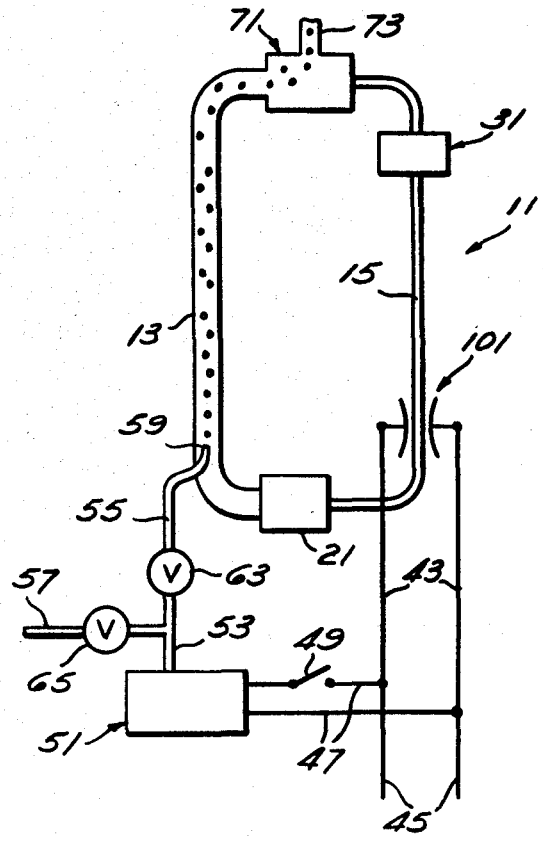

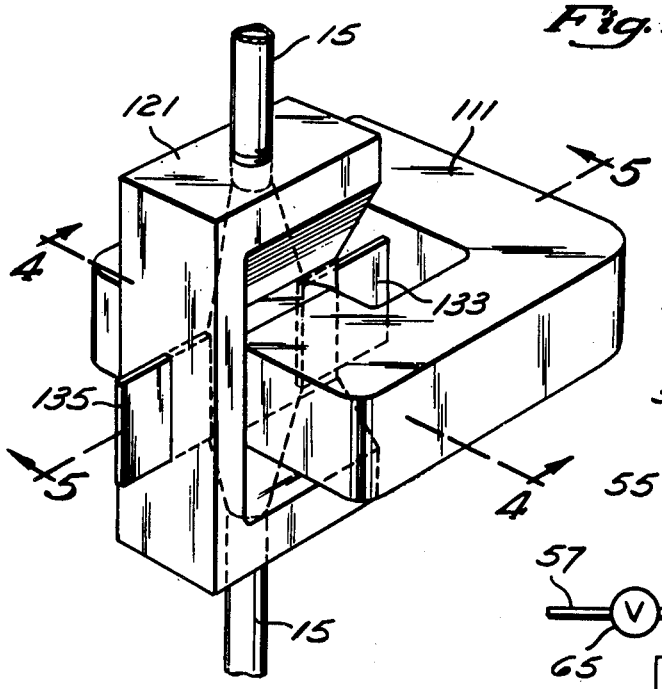

Fig. 2

Fig. 1

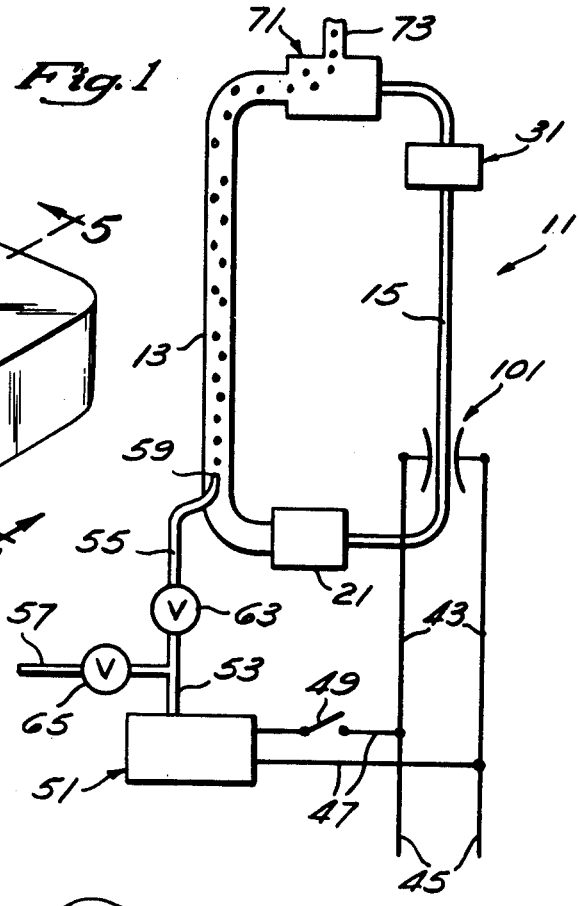

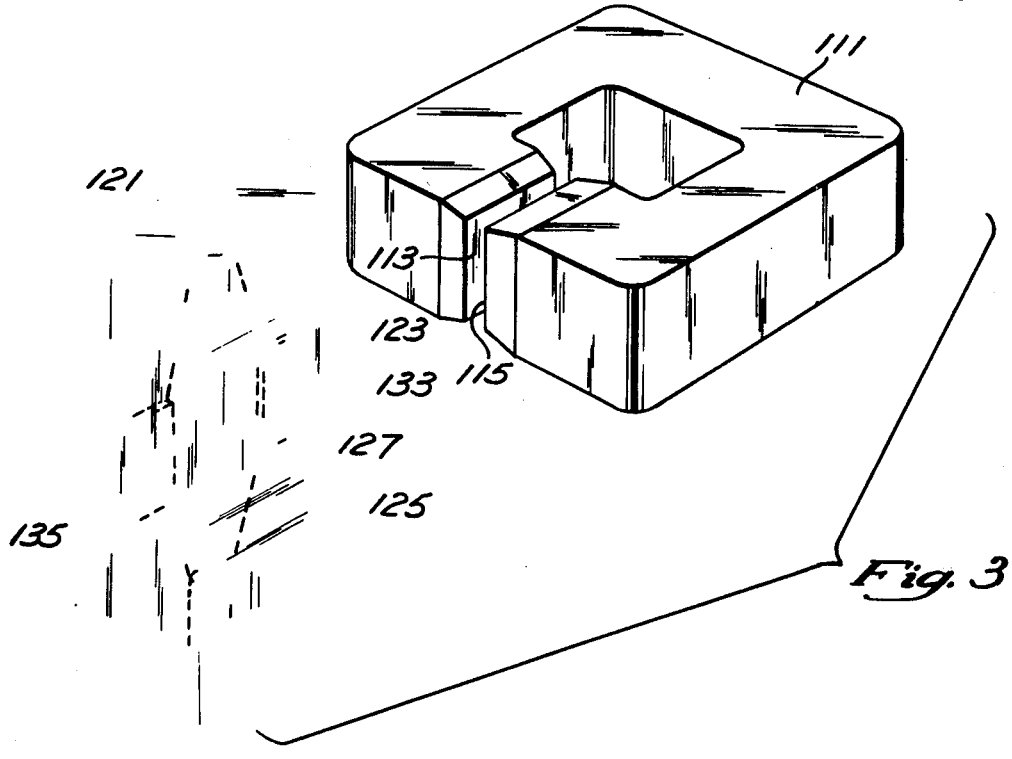

Fig. 3

Fig. 6

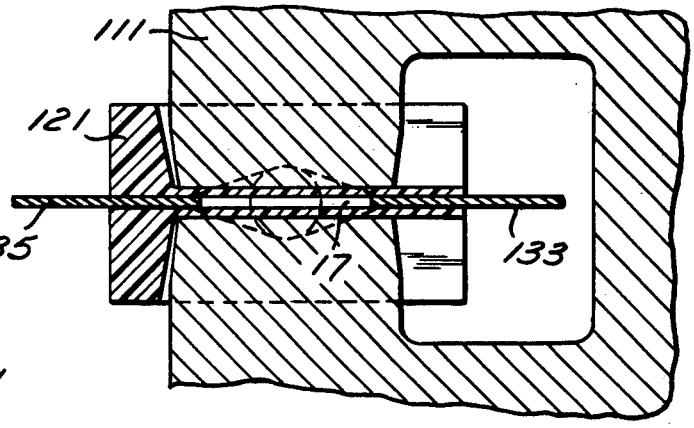

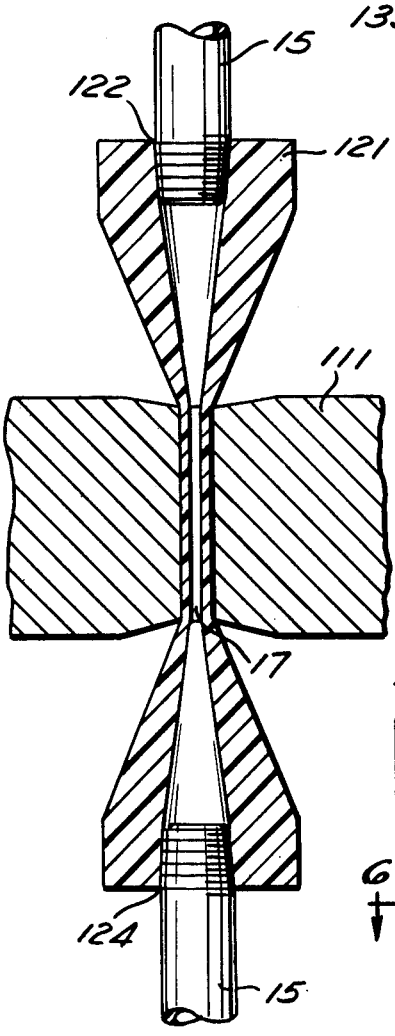

Fig. 4

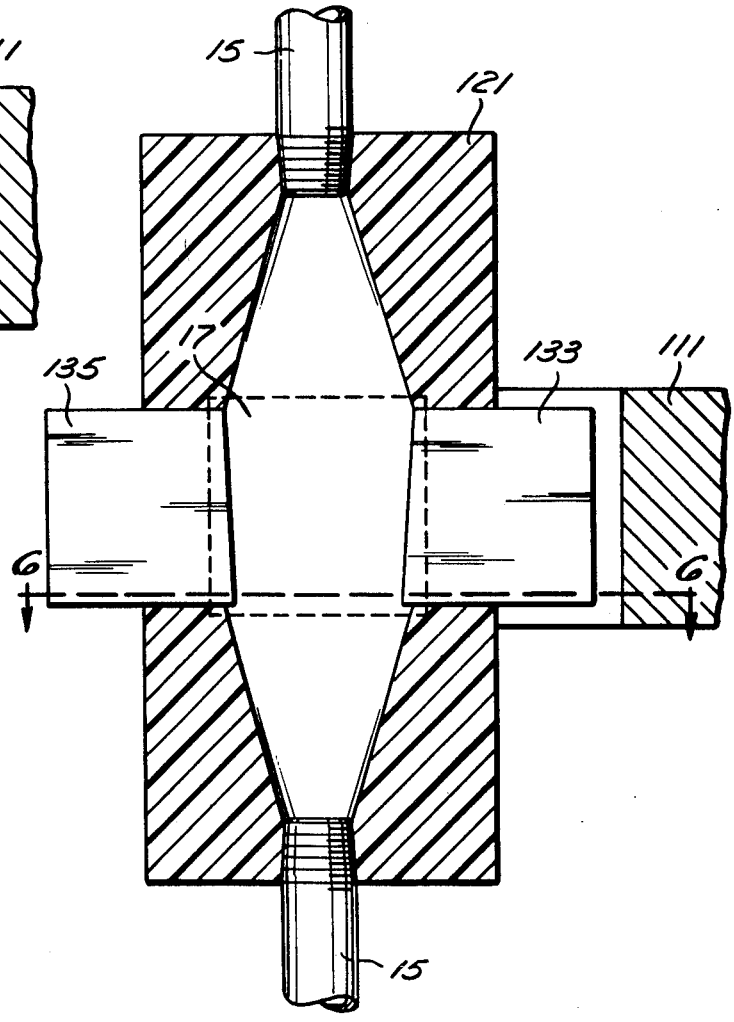

Fig. 5

Fig. 7

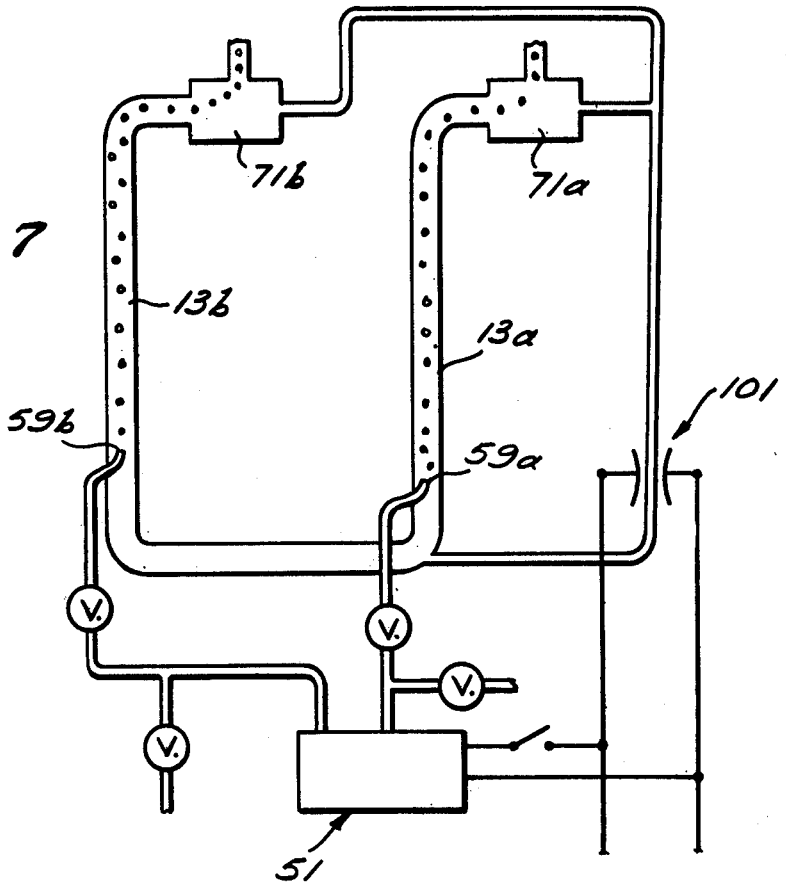

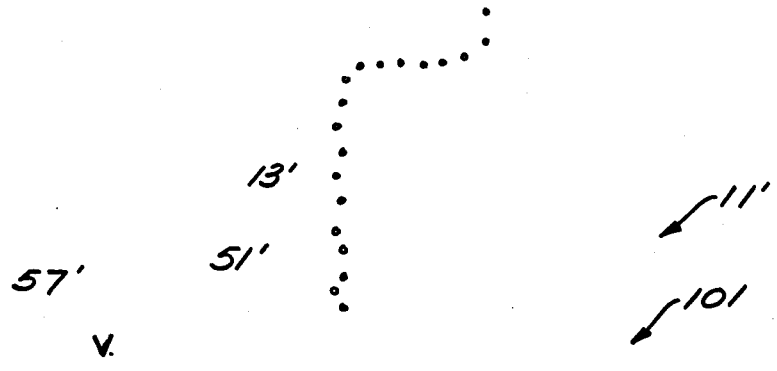

21

Fig. 8

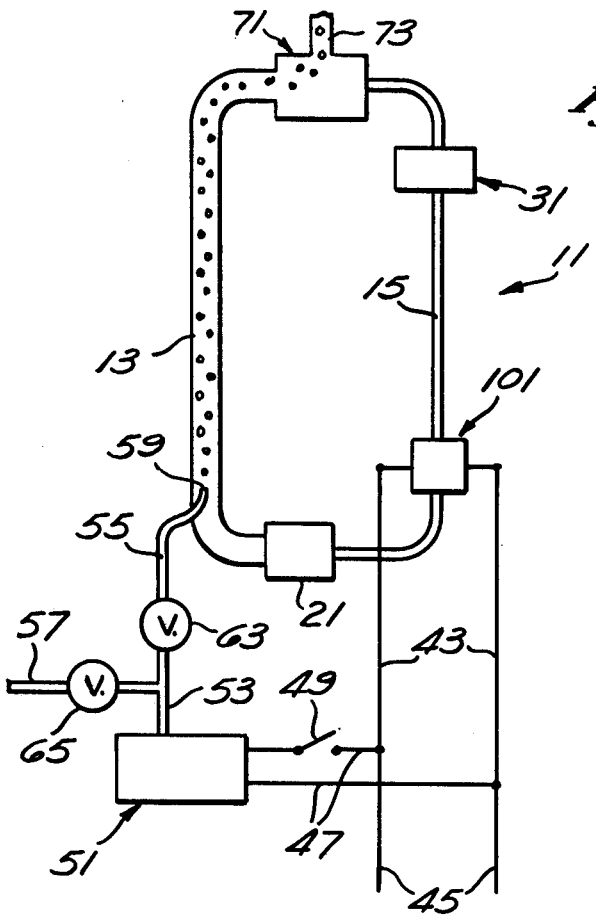
71
73
31
11
15
13
101
59
55
21
57
63
43
53
49
65
47
51
45

Fig. 9

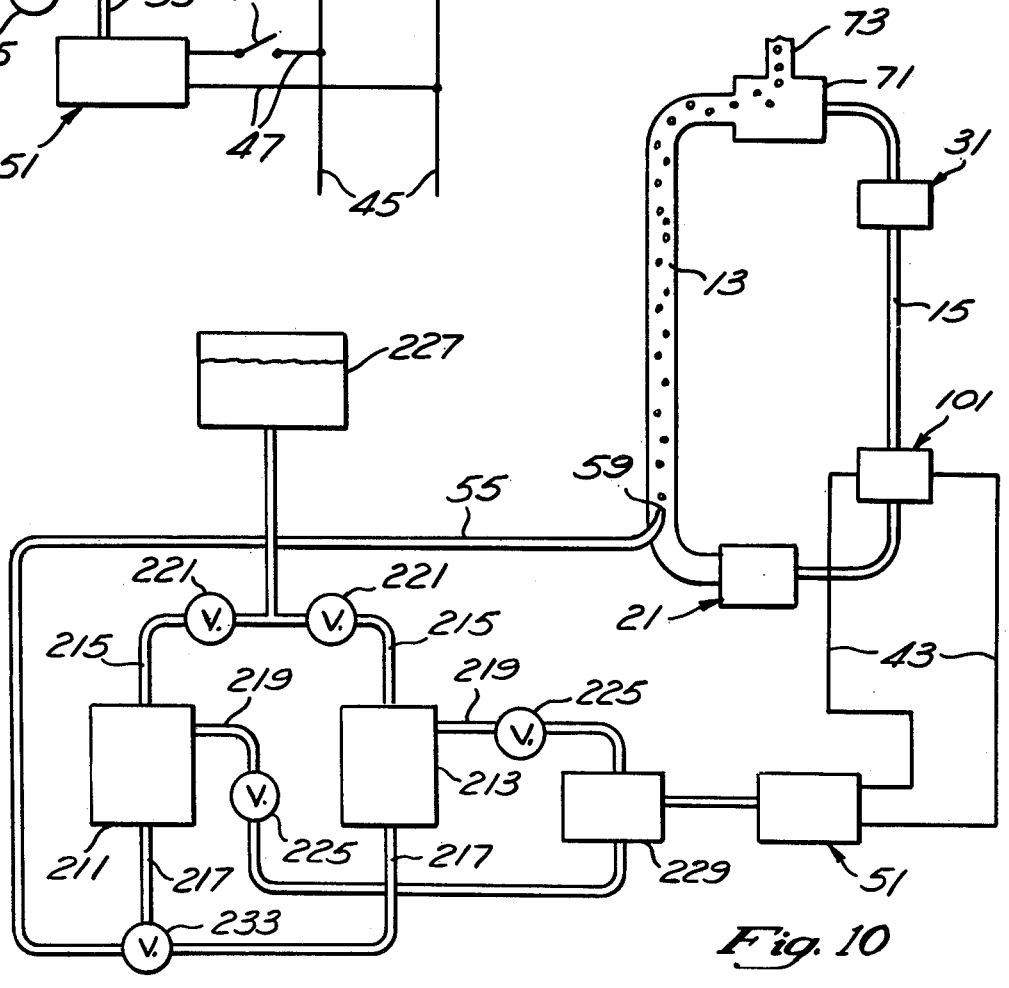
73
71
31
13
15
227
101
59
55
221
221
21
215
215
43
219
219
225
213
225
211
217
217
229
51
233

Fig. 10

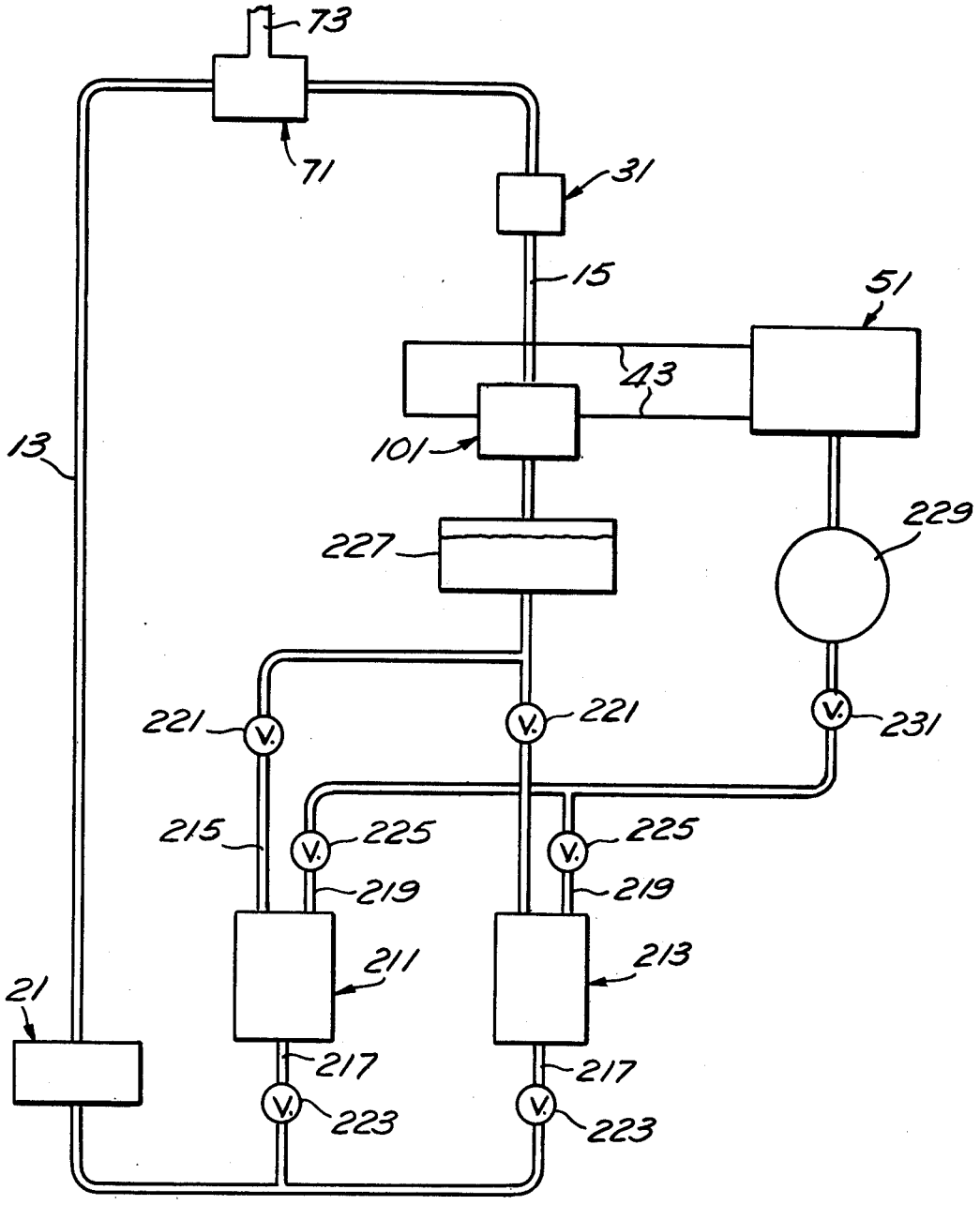
73
71
31
15
51
43
101
13
227
229
221
221
231
215
225
225
219
219
211
213
21
217
217
223
223

Fig. 11

ENERGY CONVERSION SYSTEM

RELATED APPLICATIONS

This application is a continuation-in-part of application Ser. No. 342,391, filed Jan. 25, 1982, and entitled "Thermal Energy Conversion."

BACKGROUND OF THE INVENTION

With the advent of higher prices for the energy the world consumes, much interest has been generated in new sources of energy and in more efficient uses of this energy. One of the energy conversion devices for which promise has been held is the magnetohydrodynamic generator (MHD). The basis for the operation of an MHD is that passing an electrically conducting fluid through a strong magnetic field will produce an electric potential between opposite sides of the throat through which the conducting fluid flows. The magnitude of the power generated with a given fluid is proportional to the velocity of the fluid through the throat.

MHD development has typically focused on the use of high temperature, high pressure gas or plasma, although some systems have been developed using an electrically conducting liquid. The temperature of the plasma or liquid used in these devices is usually on the order of several hundred to a few thousand degrees Celsius. The pressure under which the working fluid operates is also very high in most systems, on the order of several hundred to a few thousand pounds per square inch. The use of such high temperature and pressure fluids limits the choice of materials out of which the system can be made. The high temperatures and high pressures in these systems also make the systems prone to leaks and contribute to the rapid deterioration of machinery such as pumps used in the system.

To provide the flow of conducting fluid through the MHD throat, some systems have incorporated means for establishing a convective flow of the fluid around a closed loop. This convective flow is established by heating the fluid at one point in the loop and cooling it at another. Such a system is shown in U.S. Pat. No. 3,375,664 to Wells. It has been found, though, that the low velocity thus obtained has not been sufficient to permit the MHD to generate more than a few milliwatts of power even with vertical leg members up to 100 feet tall. Another means of causing a flow of the conducting fluid through an MHD loop has been to establish a convective flow by introducing a gas into part of the loop to create a density differential between the fluid in different sections of the loop. This has typically been accomplished by boiling either the conducting liquid or a second fluid and using the vapor bubbles to leviate one column of the fluid. A system that operates in this manner is disclosed in U.S. Pat. No. 3,443,129 to Hammitt. Such systems, however, have been troublesome, since boiling the fluid takes thermal energy from the system, reducing the heat in the conducting fluid in the rising column. Also, the height and temperature of the rising column are severely constrained by the need to prevent condensation of the gas bubbles before they reach the top of the column.

SUMMARY OF THE INVENTION

The present invention includes an apparatus for converting one form of energy into an alternate form of energy, and comprises a fluid conduit through which flows a fluid, a first means for establishing a flow of said fluid through the fluid conduit, an electric generator coupled to the conduit to generate electric energy from the flowing fluid, a gas generator that uses a portion of the electric energy generated by the electric generator to form a gas, and an apparatus that uses at least a portion of the gas generated by the gas generator to increase the rate of flow of the fluid through the conduit.

The present invention efficiently converts thermal energy (heat) into an alternate form of energy by means of a low-temperature process. The invention consists of a fluid flow loop with two vertical columns interconnected at the top and the bottom. The fluid that flows in this loop is an electrically conducting fluid, preferably a liquid such a mercury. The column in which the fluid rises is heated to a temperature of approximately 40°–150° C. by a thermal source and the column in which the fluid flows down is cooled to a temperature of approximately 0°–30° C. by means of a lower temperature heat sink. The difference in the density of the fluid in these columns induces a convective flow of that fluid through the loop. An MHD is coupled to one of these vertical columns. The MHD includes a magnet that creates a strong magnetic field perpendicular to the flow of the fluid. As the fluid flows through throat sections that have electrodes in contact with the fluid, an electric potential is generated between the electrodes, causing an electric current to flow through the electrodes and through an external electric circuit, from which power may be drawn. The key to the present invention is that the electric power so produced is largely fed back to augment, or speed up, the flow of the conducting liquid. This is accomplished by using the electric power to dissociate water molecules in an electrolytic solution, such as sulfuric acid, H_2SO_4, and inject some or all of the gasses obtained (H_2 and O_2) into the rising column of conducting liquid. The gas is removed from the loop at the top of the rising column and may be put to any of a number of uses. The remainder of the gasses, which are not injected into the loop may be taken directly from the electrolysis and put to use. Among the possible uses for the gasses produced by this system are burning to produce heat, power and pure water using them to synthesize other fuels, such as methane or methanol. The introduction of the gas into the rising column greatly reduces the density and weight of the rising column of electrically conducting liquid, and hence increases the weight difference between the two columns of liquid. As the weight difference between the columns is increased, the convective flow of the liquid is increased, further increasing the production of electrical energy. With the increased electrical output, more gasses are produced, and the convective flow velocity of the liquid is further increased, which additionally increases the amount of electric power generated by the MHD. The rate of generation of the electrolyzed gasses is increased until an equilibrium is established between the generation of the gasses and the viscous and other flow retarding forces.

The Thermal Energy Conversion System of the present invention has numerous advantages over the MHD systems previously developed. These advantages include:

(1) lower operating temperatures for the working fluid;

(2) lower pressures in the system loop;

(3) less severe constraints on the design and size of the system components;
(4) less severe constraints on the choice of materials out of which the system components are made; and
(5) greater power output with a smaller system due to increased operating efficiency.

BRIEF DESCRIPTION OF THE DRAWINGS

FIG. **1** is a schematic drawing of the Thermal Energy Conversion System of the present invention.

FIG. **2** is a perspective view of the **20** magnetohydrodynamic generator coupled to the fluid flow loop.

FIG. **3** is a perspective view of the magnetohydrodynamic generator with the magnet withdrawn from the throat section of the fluid flow loop.

FIG. **4** is a cross-sectional view of the magnetohydrodynamic generator used in the present invention taken along lines **4—4** of FIG. **2**. FIG. **5** is a cross-sectional view taken along line **5—5** of FIG. **2**.

FIG. **6** is a cross-sectional view taken along line **6—6** of FIG. **2**.

FIG. **7** is a schematic drawing of a first alternative embodiment of the Thermal Energy Conversion Sytem.

FIG. **8** is a schematic drawing of a second alternative embodiment of the Thermal Energy Conversion System.

FIG. **9** is a schematic drawing of a third alternative embodiment of the Energy Conversion System of the present invention.

FIG. **10** is a schematic drawing of a fourth alternative embodiment of the Energy Conversion System of the present invention.

FIG. **11** is a schematic drawing of a fifth alternative embodiment of the Energy Conversion System of the present invention.

DESCRIPTION OF THE PREFERRED EMBODIMENT

General System

The system of the present invention is shown schematically in FIG. **1**. It comprises a fluid loop **11** that is preferably closed, including first and second vertical columns or legs **13** and **15** that are interconnected at the top and bottom. A conducting fluid, such as liquid mercury, flows through the loop **11**. Liquid mercury is advantageous because of its high electrical conductivity, high density, and low specific heat value, but other electrically conductive fluids such as a electrolytic solutions may also be used, depending on cost considerations, equipment design or availability, or other factors. On the second column **15** is an electric generator **101**, such as a magnetohydrodynamic generator (MHD) **101**. Electrical leads **43** transmit the electric potential generated by the MHD **101**.

A source of thermal energy **21** is coupled to the loop near the bottom of the first column **13**. This source **21** may be virtually any type of thermal energy source, including a burner for fossil fuels or a heat exchanger drawing heat from a reservoir heated by either solar energy or geothermal energy. The temperature increase provided by the thermal energy source **21** depends upon the environment in which the system operates. This temperature increase can range from 20° to 100° C. or more, and is preferably at least 40° C.

A heat exchanger or other device for removing thermal energy from the working fluid **31** is connected to the loop near the top of the second column **15** to draw heat from the conducting fluid and transfer it to a heat sink, such as a large body of cool water that is isolated from the sun, or some other low temperature body, which may be a body of ice if the system is used in a particularly cold environment.

A gas injector **59** for introducing gas into the system loop is placed near the bottom of the first column **13**. Gas injector **59** is a gas nozzle outlet of conventional design and is substantially centrally located in column **13**.

A gas separator **71** is coupled to the loop near the top of the first leg **13**. Separator **71** may be of conventional design for drawing gas from a two-phase flow. Gas separator **71** permits the liquid mercury to continue flowing around the loop, while removing the gasses introduced by gas injector **59** to be drawn off through outlet **73**. Outlet **73** is connected so that the gasses may be put to other uses, such as burned to produce heat or power, stored to be burned later, or used to synthesize other fuels, such as methane or methanol.

An electrolytic gas generator **51** uses the electrical energy generated by the MHD **101** to electrolyze an electrolyte, such as a solution of sulfuric acid (H_2SO_4) to generate hydrogen and oxygen gas, which contain chemical energy. The pressure at which the gas generator must be capable of producing the gasses depends upon the static pressure in column **13** at gas injector **59** caused by the column of mercury, since, to enter the column, the gas must be at a pressure at least as great as that of that static pressure. This static pressure depends on the height of the columns **13** and **15**. For a small system with short columns, the gas generator **51** need only produce the gas at a pressure of a few pounds per square inch, while a gas generator coupled to a system using much taller columns needs to produce the gas at a pressure on the order of a few hundred pounds per square inch.

Outlet **53** from the gas generator **51** is preferably designed to keep the oxygen and hydrogen formed by the gas generator separate, since together they form a potentially explosive mixture. Outlet **53** branches into pipes **55** and **57**. Pipe **55** leads to gas injector **59**, so that part or all of the gasses generated by the electrolytic gas generator **51** may be injected into the first column **13**. Valve **63** is provided on pipe **55** to control the volume of gas entering the fluid flow loop. Pipe **57** leads to a device for either storing or using the gasses. Advantageously, pipe **57** also keeps the gasses segregated, so that some of whichever of the gasses is injected into the column **13** may, if desired, also be diverted away from the flow loop, and stored or used directly. Valve **65** on pipe **57** controls the volume of gas being diverted away from the flow loop. Adjusting the valves **63** and **65** permits careful control of the portion of gasses that goes directly to other uses and the portion introduced into the fluid flow loop.

Electrical leads **43** and **47** permit the power generated by the MHD **101** to be transferred to the electrolytic gas generator **51**. This feedback of the power generated back into the system greatly increases the system's efficiency. Leads **45** permit power that is not used to operate the gas generator **51** to be drawn off the system and used for other purposes.

The MHD

The MHD **101**, shown in FIGS. **2–6**, includes a magnet **111** with closely juxtaposed north and south poles **115** and **113**, a nonferromagnetic block **121**, and elec-

trodes **133** and **135**. Between the poles **115** and **113** is a throat section **17** of the block **121** (FIG. **4**). This throat section **17** is defined by two closely juxtaposed rectangular walls **127** and **129** to allow a thin sheet of the mercury to pass between the poles of the magnet. The magnetic poles **113** and **115** are closely juxtaposed to maximize the intensity of the magnetic field across the sheet of mercury passing through throat section **17**. Block **121** further includes threaded openings **122** and **124** for receiving the ends of the tubular piping that forms the remainder of the second column **15**. The passage through which the mercury passes is tapered within the portions of the block **121** above and below the throat section **17** to form a transition between the tubular section of the second leg **15** and the thin throat section **17**. As shown in FIG. **2**, the exterior of the block **121** is also narrowed at throat section **17** so it will fit between the poles **113** and **115** of the magnet **111**.

Electrodes **133** and **135** (FIG. **5**) are placed on either side of this throat section **17** to tap the electric potential created between these two sides of the throat section. These electrodes are advantageously shaped so that continuous contact between the electrodes and the mercury flowing through the throat section **17** is promoted.

The throat section **17** is sized so that a venturi effect provides a ratio of approximately five to one between the speed of the mercury through the throat and the speed through the other sections of the loop.

The fluid flow passage through the MHD **101** must be constructed to contain the mercury flowing through it, particularly at the threaded openings **122** and **124**, and at the points at which electrodes **133** and **135** enter throat section **17**. But the passage is not subjected to the very high pressures that the MHD throat sections of systems that use a plasma as the working fluid must contain.

The Electrolytic Gas Generator

Electrolysis occurs when an electric current is passed through an electrolyte between two electrodes, an anode and a cathode. Ions in the solution move to and from the anode and cathode so that material may be transported and deposited on one of the electrodes, new compounds may be formed, or gasses may be liberated. Certain electrolytes, such as sulfuric acid, sodium hydroxide, and potassium carbonate, when dissolved in water, cause the water itself to decompose into its component parts, hydrogen and oxygen, when a current is passed through the solution.

The amount of material or gas formed by the electrolysis can be found using Faraday's Laws, which say that (1) the amount of chemical change produced by an electric current is proportional to the quantity of electricity and (2) the amount of different substances liberated by a given quantity of electricity are proportional to their chemical equivalent weights. (Equivalent weight=atomic weight divided by valence change.) Thus, the amount of material or gas produced is proportional to the current passed through the solution. When water is electrolyzed, the volume of hydrogen and oxygen produced is proportional to the current passed through the solution.

An example of a simple electrolytic gas generator that may be installed in the present system as gas generator **51** is a fully charged automobile storage battery comprising lead plates immersed in a solution of sulfuric acid. As current is passed through the solution in the cell the water in the solution is dissociated into hydrogen and oxygen. The hydrogen is given off at one of the electrodes, and the oxygen at the other. As the electrolyte solution is dissociated into its component parts to form the gasses, the water must be replaced, but the acid itself remains in the solution.

The gasses produced should be kept separate, since, in the case of hydrogen and oxygen, the two gasses together form an explosive mixture. This separation can be maintained by placing a membrane between the electrodes.

Since the amount of gas produced is proportional to the current, but not the pressure under which the cell operates (except at the extremes), the gasses may be produced at relatively high pressures with negligible increases in the power consumed. Generation of gasses at a pressume of forty atmospheres is possible with electrolysis. Even by conservative estimates, the electrolytic process can produce high pressures in gasses 15% more efficiently than standard mechanical pumps.

Other types of electrolytic cells may also be used as gas generator **51**. A cell comprising a nickle anode and iron cathode immersed in a solution of sodium hydroxide in water produces oxygen at the anode and hydrogen at the cathodes. Nickel electrodes immersed in a solution of potassium carbonate may also be used to produce hydrogen and oxygen.

The Thermal Energy Source

The thermal energy source **21** may be one of a number of available apparatuses for transferring thermal energy to the fluid circulating in the loop. The purpose of the thermal energy source **21** is to increase the temperature of the liquid in column **13** relative to the liquid in column **15** so that a density differential is established between the mercury in the two columns, causing a convective flow of the fluid liquid around the loop. Thus, the greater the temperature differential that can be established, the greater the convective flow of the liquid.

Particularly appropriate as a thermal energy source, in light of the interest in renewable resources, is a heat exchanger drawing heat from a solar heated reservoir. Panels for heating liquids such as water using solar energy are commercially available in many sizes from numerous sources, as are containers for storing the solar heated water. Heat exchangers are also readily available that can be coupled to the closed loop and are suitable for circulating the heated water from the reservoir and transferring its heat to the mercury circulating in the closed loop. Such apparatus can provide a 40° C. temperature differential, which is suitable for operation of the system.

Also appropriate would be the use of a heat exchanger circulating geothermally heated water. Geothermally heated water often is at a much higher temperature than solar heated water would be, on the order of 120°–180° C., and thus would be able to produce a greater temperature differential between the mercury in column **13** and the mercury in column **15**. This increased temperature differential is advantageous in that the density differential between the mercury in the two columns is greater, and consequently the convective flow of the mercury is increased. But, the availability of geothermal energy is limited.

In addition to the sources of thermal energy just discussed, a fossil fuel burner of conventional design may be used as thermal energy source **21** to directly heat the circulating mercury.

Since the important consideration for operation of the system is the temperature differential between the liquid in the two columns **13** and **15**, heat exchanger **31** must be connected to a heat sink capable of absorbing from the liquid the heat transferred to it by thermal energy source **21**. In a system located in a temperature climate, this is most effectively done by circulating in the heat exchanger cool water drawn from a large reservoir kept cool by isolating it from exposure to the sun. In a colder climate, a large body of ice may be used, which would permit the temperature of the mercury to be reduced to 0° C., or perhaps lower.

Alternatives for Energy Input

The thermal energy source **21** inputs energy into the system to create the flow of fluid through the conduit to allow the electrical generator **101** to produce electrical energy. Thus, the thermal energy source **21** can be replaced by any of a number of other mechanisms for inputting energy to the fluid, such as a pump that impacts kinetic energy directly to the fluid.

The flow creator **21** begins the movement of fluid around the loop and through the electric generator **101** so that the production of electric energy is begun. Once the production of electric energy has begun, the gas generator **51** can be used to produce gas, and the gas can be used by the flow augmentation means to increase the rate of flow, and consequently increase the rate of production of electric energy. The input of energy through the energy source **21** continues to ensure the continued flow of fluid through the conduit.

If the flow creator **21** is a pump or other non-thermal energy source, then obviously the heat sink **31** is not necessary at the top of the second column **15**, since there is no additional heat in the working fluid that must be removed.

Operation of the System

In operation, thermal energy is added by heat source **21** to the conducting fluid in the first column **13** to lower the density of the fluid in that column, thereby inducing a convective flow of the mercury. The heat so introduced into the conducting fluid is removed by the heat exchanger **31** at the top of the second column **15** to ensure the continuation of the temperature differential (and the density differential) between the mercury in the first and second columns. As the fluid flows downward in the second column, it flows through the throat section **17** of the MHD **101** in a direction perpendicular to the magnetic field established by the magnet **111**. This flow, by reason of Faraday's Laws, creates an electric potential between the sides of the throat section **17**, which is tapped by the electrodes **133** and **135**. This purely temperature-induced convective flow through the MHD will generate a very low power output. The power output is low due to the low velocity of the electrically conducting fluid through the MHD.

The electric potential is produced in the following manner: When a sheet of conducting material, e.g., mercury, is passed through a magnetic field that is perpendicular to the direction in which the conducting material is moving, an electric potential develops between points on the sheet of conductive material that lie on an axis perpendicular to both the direction of movement of the conductive sheet and the direction of the magnetic field.

As the conductive fluid flows with velocity v through the perpendicular magnetic field B, a force is exerted on each charge carrier in a third, mutually perpendicular direction. This force F is given by the vector equation:

$$F=qv\times B$$

in which q is the charge of each charge carrier. The electric field intensity (E) resulting from this force is given by the vector equation:

$$E=(F/q)=v\times B.$$

This electric field yields an electric potential between two sides of the channel through which the conductor flows. This potential is:

$$E=\int E\cdot dL=\int(v\times B)\cdot dL$$

in which L represents the width of the sheet of conductive fluid.

In the MHD loop, flow equilibrium is reached when the electromotive force so generated equals the force driving the fluid flow, the difference in the weight of the mercury in the two columns.

By using the electric power generated by the MHD **101** to electrolyze a second fluid in gas generator **51** and introduce the gasses so generated into the rising first column **13**, the efficiency of the system can be greatly increased due to the increased rate of flow of the electrically conducting fluid through the MHD. When the gasses produced by the electrolytic gas generator **51** are introduced into the first column **13**, the density and weight of the mercury in that column is substantially decreased, which increases the density and weight differentials between the fluid in the first column **13** and the fluid in the second column **15**. This increased differential greatly enhances the convective flow of the mercury around the loop, increasing the rate of flow of the conducting fluid through the throat **17** of the MHD section of the loop. As this flow through the throat section is increased, so is the power produced by the MHD. This increase continues until a new flow equilibrium is reached. The gas injected into the upflow column **13** also contains mechanical energy, because it is under pressure. When the gas is injected, it occupies a small volume because of the high pressure at which the gas generator **51** creates it. As the gas bubbles rise in the column **13**, the pressure of the surrounding fluid decreases, allowing the gas to expand. It has been found that the energy of compression of the gas is converted into kinetic energy of the working fluid as the expanding gas works on the fluid.

The gasses introduced into the loop, which also contain chemical energy, are separated from the conducting fluid at the top of the loop by the gas separator **71** and may be put to any of a number of uses, as mentioned above.

Each cycle of flow (once around the loop) extracts an amount of energy proportional to the weight difference between the two columns (represented by the equation $E=dW\times h$, in which dW is the difference in weight and h is the height of the column). The amount of power that can be obtained from the system depends upon the speed or time it takes to complete the stroke, i.e., the rate at which the work is done. Thus, the power is given by the equation $P=dW\times v$, in which v is the speed of the fluid flow.

As the system continues to operate, the MHD **101** may generate more power than is needed to operate the electrolytic gas generator **51**. When this occurs, electrical leads **45** may be attached to an external load suitable for using this excess power. Alternately, electrical leads **45** may be connected to a battery to store the power for later use. Accordingly, the system may be advantageously used to convert the thermal energy supplied by thermal energy source **21** to both chemical energy in the form of gasses and electrical energy.

Alternative Embodiments

General System

Alternatively to using a single upflowing column **13** in the MHD loop **11**, two or more columns **13*a*** and **13*b*** may be used, as shown in FIG. **7**. In this embodiment, one of the gasses produced by electrolytic gas generator **51**, for example the oxygen may be injected into column **13*a*** and the other gas, the hydrogen, may be injected into column **13*b***. In this way, both the gasses produced may be used to supplement the convective flow, while keeping the gasses separate. Since both gasses produced by the gas generator are used, the utility of the feedback of the electrical energy generated by the MHD **101** is enhanced. This embodiment requires at least two gas separators **71*a*** and **71*b*** (one to separate each gas out of the flow), and a gas injector **59*a*** and **59*b*** for each column **13*a*** and **13*b***.

The Electrolytic Gas Generator

As an alternative to using a liquid metal such as mercury in the MHD loop **11** and electrolyzing a separate electrolyte in gas generator **51**, an electrolyte may be circulated through the MED loop **11'** (FIG. **8**) and passed through electrolytic gas generator **51'** so that the MHD working fluid itself is electrolyzed. From gas generator **51'** part or all of the gasses may be injected into the column **13'**. Pipe **57'** allows whatever of the gasses are not injected into column **13'** to be diverted and put directly to use.

Alternative Electrical Generator 101

As an alternative magnetohydrodynamic generator as the electric generator **101**, any of a number of electric generators that generate electrical energy from a moving fluid can be used. FIG. **9** is a schematic drawing of the system with a general designation for the electrical generator **101**. For example, the electrical generator **101** can be a homopolar or Faraday Disk type of generator. Another example of such an alternative electric generator is a common turbine generator, in which the moving fluid turns the blades of the turbine to generate electrical energy in a known fashion. FIG. **9** shows the system of FIG. **1** with a more general representation of the electric generator **101**.

It would be apparent to those skilled in this art of electrical energy generation that any type of generator that converts the kinetic energy of a moving fluid to electric energy can be used as the means for generating electric energy from the moving fluid.

First Alternative Flow Augmentation Means

Referring now to the embodiment of the system of the invention shown in FIG. **10**, the overall system is roughly the same as that described above, with a pair of substantially vertical flow conduits **13,15**, an electric generator **101**, and a gas generator **51** that uses the electric energy generated by the electric generator **101**. The gas generator **51** and the electric generator **101** are connected by the electrical leads **43**. The system again includes an energy input means **21**, such as a thermal energy source or other means to begin the flow of fluid through the conduit, such as a pump.

Rather than injecting the gasses developed by the electrolytic gas generator **51** directly into the working fluid in the upflow column **13**, the system of this alternative embodiment uses the gasses generated by the electrolytic gas generator **51** to pressurize a volatile fluid, which is then injected into the upflow tube **13**, where it changes to its gas form and reduces the density of the working fluid to further increase the rate of flow of the working fluid through the conduit.

A pair of fluid containers **211,213** each have fluid inlets **215**, fluid outlets **217**, and gas inlets **219**. Each of these inlets **215,219** and outlets **217** is controlled by a valve **221,223,225** to control the flow of fluid into and out of the container **211,213**.

The gas from the gas generator **51** is alternately supplied to the first and second fluid containers **211,213**. Initially, the fluid inlet valve **221** on the first fluid container **211** is opened and the first container is substantially filled with the volatile fluid from the reservoir **227**. This volatile fluid readily changes from the liquid phase to the gas phase at relatively low temperatures, on the order of the temperature of the working fluid in the conduit loop. When the volatile fluid enters the first container **211**, it is in the liquid phase. After the first container **211** has been substantially filled with the fluid, the fluid inlet valve **221** is closed, and the gas inlet valve **225** is opened. The gas is supplied from the gas generator **51** to the gas inlet **219** at a high pressure, so the gas builds the pressure inside the container **211**. When the pressure reaches a specified level, the fluid outlet valve **223** is opened, and the pressure inside the fluid container **211** drives the volatile fluid out of the first fluid container **211** through the injection conduit **55** and into the injection nozzle **59**. The injection nozzle **59** is similar to the injection nozzle **59** of the embodiment shown in FIG. **1** and described above.

As the volatile fluid is injected into the upflow column of the fluid conduit **13**, the fluid is transformed to its gas phase by the heat of the working fluid that surrounds the injection nozzle **59**. As the volatile fluid is at a very high pressure as it enters the upflow tube **13** of the conduit, the gas bubbles it forms are rather small. As the gas bubbles move up in the column with the upflowing fluid, these bubbles expand in size as the external pressure on them is less. These expanding bubbles further increase the flow of the working fluids through the conduit.

While the first fluid container **211** is being pressurized, the fluid inlet valve **221** for the second fluid container **213** is opened and the volatile fluid is allowed to flow into the second fluid container **213** to substantially fill it. The second fluid container **213** is then pressurized in the same way as first fluid container **211** while the volatile fluid is being driven out of the first fluid container **211**.

While the second fluid container **213** is being pressurized, the first container **211** is again filled with the volatile fluid. As the volatile fluid is driven from the second fluid container **213**, the first container **211** is again pressurized. This alternating process continues indefinitely, using the two fluid containers **211,213** to maintain a constant flow of volatile fluid through the injection

conduit **55** at a high pressure. A mixer **233** where the two outlets **27** from the fluid containers **211,213** join ensures that the flow from the containers is properly alternated.

Obviously, more than two of the fluid containers **211,213** may be used in a system that operates such as this to further increase the supply of the volatile fluid to the conduit.

To minimize the need for pumps and other expensive equipment, the fluid containers **211,213** are fed from the reservoir **227** that is at an elevation higher than the elevation of the fluid containers **211,213**. In this way, when the fluid inlet valve **221** on one of the fluid containes **211,213** is open, the fluid will flow into the container by gravitational force, eliminating the need for a pump or other fluid moving apparatus to fill the containers.

To ensure an adequate high pressure supply of gas to pressurize the fluid containers **211,213**, a gas accumulator **229** is connected to the output of the gas generator **51**. This accumulator **229** collects the gas generated by the gas generator **51** and allows the gas to build up to a very high pressure. It is well known that the electrolysis process of gas generation can produce gasses at very high pressures without significant loss in efficiency or increase in overall energy consumption. Thus, the gas accumulator **229** allows the pressure of gas to be built up before it is fed through the gas inlets **219** to the first and second fluid containers **211,213**.

The gas separator **71** at the top of the upflow column **13** allows the gaseous volatile fluid to be removed from the conduit loop.

Second Alternative Flow Augmentation Means

Referring now to the embodiment of the system of the invention shown in FIG. **11**, the overall system is again roughly the same as that described above, with a pair of flow tubes **13, 15**, an electric generator **101**, and a gas generator **51** that uses the electric energy generated by the electric generator **101**. The gas generator **51** and the electric generator **101** are connected by the electrical leads **43**. The system includes an energy input means **21**, such as a thermal energy source or other means to begin the flow of fluid through the conduit, such as a pump. If the thermal energy source is used, then, as with the previously described system, the heat exchanger **31** is again necessary to remove the heat from the fluid to maintain the temperature differential between the portions of the fluid in each column.

Rather than using the gas generated by the gas generator **51** to reduce the density of fluid in the upflow column **13**, however, the embodiment shown in FIG. **10** uses the gas generated by the gas generator **51** to build up pressure behind the fluid to drive the fluid through the conduit in an efficient manner.

To use the gas to propel the fluid through the conduit, a pair of fluid containers **211,213** each has a fluid inlet **215** and fluid outlet **217**, in addition to a gas inlet **219**. Each of these inlets **215,219** and outlets **217** is controlled by a valve **221,223,225** to control the flow of fluid into and out of the container **211,213**.

The gas from the gas generator **51** is supplied alternately to the first and second fluid containers **211,213**. Initially, the fluid inlet valve **221** on the first fluid container **211** is opened and the first container **211** is substantially filled with the system working fluid. Then the fluid inlet valve **221** is closed, and the gas inlet valve **225** is opened. The gas is supplied to the gas inlet **219** at a high pressure, so the gas builds the pressure inside the container **211**. When the pressure reaches a specified level, the fluid outlet valve **223** is opened, and the pressure inside the fluid container **211** drives the fluid out of the first fluid container **211** through the upflow tube **13** and down through the downflow tube **15** and the electric energy generator **101**. As the flow is driven by the pressure, it is at a higher rate than the initial flow, thus increasing the production of electric energy by the electric generator **101**.

While the first fluid container **211** is being pressurized, the fluid inlet valve **221** for the second fluid container **213** is opened and the fluid is allowed to flow into the second fluid container **213** to substantially fill it. The second fluid container **213** is then pressurized in the same way as the first fluid container **211** while the fluid is being driven out of the first fluid container **211**.

While the second fluid container **213** is being pressurized, the first container **211** is again filled with fluid. As the fluid is driven from the second fluid container **213**, the first container **211** is again pressurized. This alternating process continues indefinitely, using the two fluid containers **211,213** to maintain a constant flow of fluid through the conduit **13,15**.

Obviously, more than two fluid containers may also be used in a system that operates such as this to further increase the fluid flow.

To minimize the need for pumps and other expensive equipment, the fluid containers **211,213** are fed from a reservoir **227** that is at the bottom of the downflow tube **15**, and at an elevation higher than the elevation of the first and second fluid containers **211,213**. In this way, when the fluid inlet valve **221** on one of the fluid containers **211,213** is opened, the fluid will flow into the container by gravitational force, eliminating the need for a pump or other fluid moving apparatus.

To ensure an adequate high pressure supply of gas to pressurize the first and second fluid containers **211,213** a gas accumulator **229** is connected to the output of the gas generator **51**. This accumulator **229** collects the gas generated by the gas generator **51** and allows the gas to build up to a very high pressure. It is well known that the electrolysis process of gas generation can produce gasses at very high pressures without significant loss in efficiency or increase in overall energy consumption. Thus, the gas accumulator **229** allows the pressure of gas to be built up before it is fed through the gas inlets **219** to the first and second fluid containers **211,213**.

A gas separator **71** at the top of the upflow column **13** allows any gas that has been introduced into the working fluid by the fluid flow augmentation to be removed before the working fluid flows downward through the second column **15** and the electric generator **101**.

I claim:

1. An apparatus for converting thermal energy into an alternate form of energy, comprising:

(1) a fluid loop through which flows a liquid, said loop comprising:

(a) a first substantially vertical column;

(b) a second substantially vertical column;

(c) interconnection means between the top of said first column and the top of said second column; and

(d) interconnection means between the bottom of said first column and the bottom of said second column;

(2) means for creating a temperature differential between portions of said liquid in each column by

heating the portion of said liquid in said first column and cooling the portion of said liquid in said second column to form a density differential in said liquid and establish a convective flow of said liquid through said loop;

(3) electrical generator means for generating electrical energy from said flowing liquid, the amount of electrical energy generated being proportional to the velocity of the flow of said liquid; and

(4) means for supplementing said convective flow to increase the electrical energy generated by said electrical generator means by increasing the density differential between the liquid in each of said columns, comprising:

(a) an electrolytic gas generator coupled to said electrical generator means for using at least a portion of said electrical energy to electrolyze a second liquid to form a gas, said gas containing chemical energy;

(b) means for introducing a portion of said gas into said first column to decrease the density of the portion of said liquid in said first column and increase the density differential between the portions of said liquid in each column; and

(c) means for removing said gas near the top of said first said column.

2. An apparatus for converting one form of energy into an alternate form of energy, comprising:

(1) a fluid conduit through which flows a fluid;

(2) first means for establishing a flow of said fluid through said conduit;

(3) second means coupled to said conduit for generating electrical energy from said flowing fluid, the amount of electrical energy generated being proportional to the velocity of the flow of said fluid;

(4) third means coupled to said second means for using at least a portion of said electrical energy to form a gas; and

(5) a fluid container having an outlet coupled to said fluid conduit, wherein:

(a) said container is adopted to receive a second fluid; and

(b) said container is additionally coupled to said third means so that said gas formed by said third means pressurizes said second fluid in said container so that when said outlet is opened said second fluid is propelled out of said container into said conduit to increase the rate of flow of said first fluid through said conduit.

3. The apparatus defined in claim 2, additionally comprising a second fluid container, substantially identical to said first fluid container, and additionally coupled to said fluid conduit so that said second fluid may be alternately propelled from said first fluid container and from said second fluid container.

4. An apparatus for converting one form of energy into an alternate form of energy, comprising:

(1) a fluid conduit through which flows a fluid;

(2) first means for establishing a fluid of said fluid through said conduit;

(3) second means coupled to said conduit for generating electrical energy from said flowing fluid, the amount of electrical energy generated being proportional to the velocity of the flow of said fluid;

(4) third means coupled to said second means for using at least a portion of said electrical energy to form a gas; and

(5) a fluid container having an outlet coupled to said fluid conduit, wherein said fluid container is additionally coupled to said third means so that said gas formed by said third means pressurizes the fluid in said container so that when said outlet from said container is opened, said fluid is propelled out of said container through said fluid conduit.

5. The apparatus defined in claim 4, additionally comprising a second fluid container, substantially identical to said first fluid container, and additionally coupled to said fluid conduit so that fluid may be alternately propelled from said first fluid container and from said second fluid container into said conduit.

6. An apparatus for converting one form of energy into an alternate form of energy, comprising:

(1) a fluid conduit through which flows a fluid;

(2) first means for establishing a flow of said fluid through the conduit;

(3) second means coupled to said conduit for generating electrical energy from said flowing fluid;

(4) third means coupled to said second means for using at least a portion of said electrical energy to form a gas, said gas pressurized by said third means; and

(5) fourth means for using at least a portion of said gas pressurized by said third means to increase the rate of flow of said fluid through said fluid conduit.

7. The apparatus defined in claim 6, wherein said fourth means comprises introducing means for introducing into said conduit at least a portion of the gas formed by said third means so that the rate of flow of said fluid is increased.

8. The apparatus defined in claim 7, additionally comprising means for removing said gas from said conduit.

9. An apparatus for converting one form of energy into an alternate form of energy, comprising:

(1) a fluid conduit through which flows a fluid;

(2) first means for establishing flow of said fluid through said conduit;

(3) second means coupled to said conduit for generating electrical energy from said flowing fluid;

(4) third means coupled to said second means for using at least a portion of said electrical energy to form a gas; and

(5) a fluid container having a fluid outlet that can be selectively opened and closed, wherein said container is coupled to said third means so that said gas pressurizes a second fluid in said container so that when said fluid outlet is opened said second fluid is propelled out of said container into said fluid conduit to increase the rate of flow of said first fluid in said conduit.

10. The apparatus defined in claim 9, additionally comprising means for removing said second fluid from said conduit.

11. The apparatus defined in claim 9, wherein said fourth means additionally comprises a gas accumulator having an inlet coupled to said third means and an outlet coupled to said fluid container so that said gas accumulator:

(1) receives said gas from said third means;

(2) stores said gas at a pressure; and

(3) supplies said gas under pressure to said fluid container.

12. The apparatus defined in claim 9, additionally comprising a fluid source coupled to said fluid container to supply said fluid container with said second fluid.

13. The apparatus defined in claim 12, wherein:

(1) said second fluid is a volatile liquid; and

(2) said fluid source is a reservoir located at a higher elevation than said fluid container so that said second fluid flows into said fluid container due to gravitational force.

14. The apparatus defined in claim **6**, wherein said fourth means comprises a fluid container having a fluid outlet that can be selectively opened and closed, wherein said container is coupled to said third means so that said gas pressurizes said fluid in said container so that said fluid is propelled out of said container into said fluid conduit to increase the rate of flow of said fluid in said conduit.

15. The apparatus defined in claim **6**, wherein:

(1) said one form of energy is thermal energy;

(2) said first means for establishing a flow of said fluid through said conduit comprises means for adding thermal energy to said fluid, to create a flow of said fluid; and

(3) said gas formed by said third means contains chemical energy.

16. The apparatus defined in claim **6**, wherein:

(1) said fluid conduit comprises:

(a) a first, substantially vertical leg;

(b) a second, substantially vertical leg;

(c) first communication means between the top of said first leg and the top of said second leg; and

(d) second communication means between the bottom of said first leg and the bottom of said second leg;

(2) said fluid flows upwardly through said first leg;

(3) said fluid flows downwardly through said second leg; and

(4) said second means is coupled to said conduit near the bottom of said second leg.

* * * * *

UNITED STATES PATENT AND TRADEMARK OFFICE

CERTIFICATE OF CORRECTION

PATENT NO. : 4,465,964

DATED : August 14, 1984

INVENTOR(S) : John H. Cover

It is certified that error appears in the above-identified patent and that said Letters Patent are hereby corrected as shown below:

Column 3, line 18, please begin a new paragraph beginning with Fig. 5 is a cross-sectional

Column 3, line 48, please delete "a"

Column 6, line 16, please delete "pressume" and insert ---pressure---

Column 13, line 60, please delete the first occurance of "fluid" and insert ---flow---

Column 14, line 18, please delete "the" and insert ---said---

Signed and Sealed this

Seventeenth Day of *September 1985*

[SEAL]

Attest:

Attesting Officer

DONALD J. QUIGG

Commissioner of Patents and Trademarks—Designate