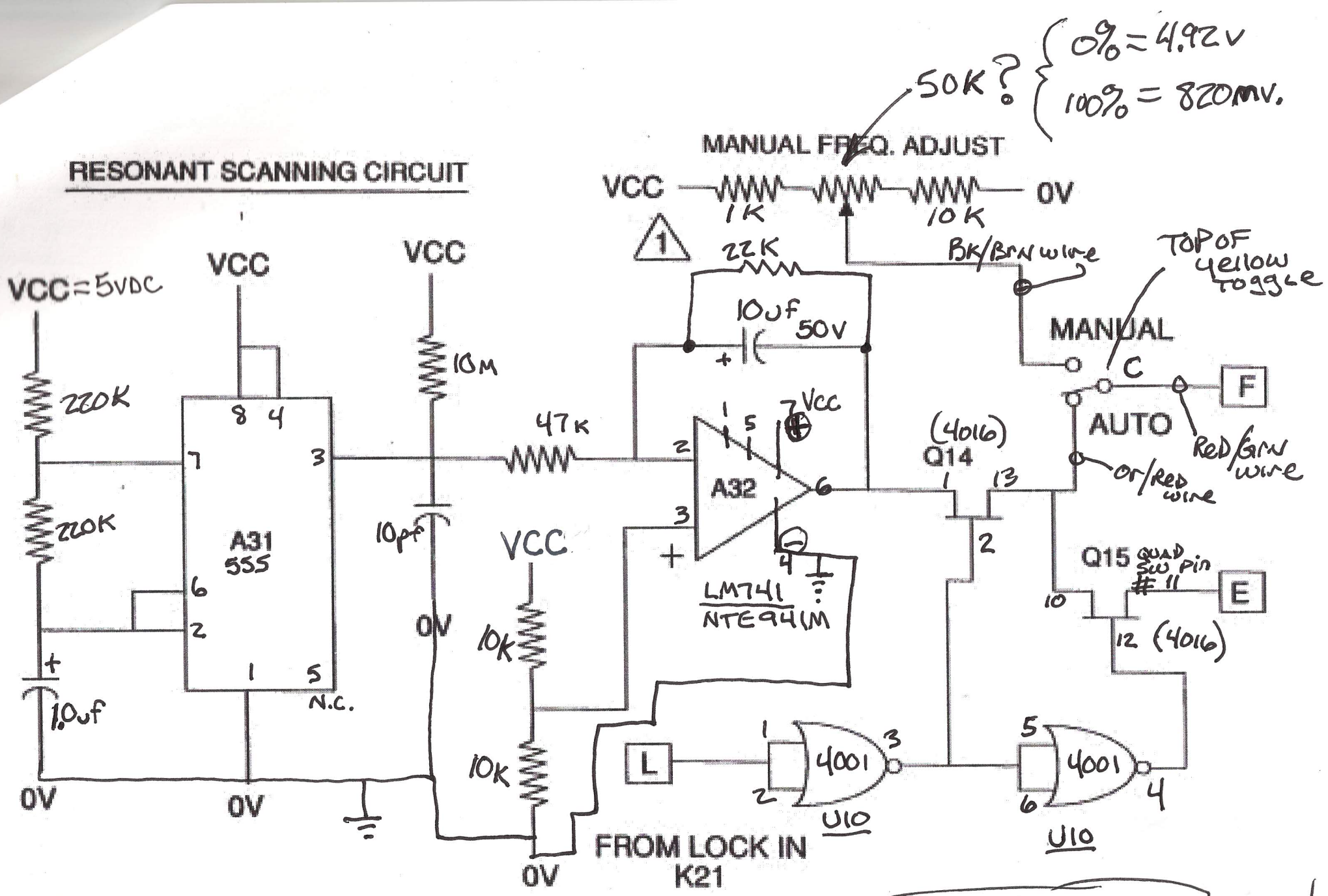
RESONANT SCANNING CIRCUIT
MANUAL FREQ. ADJUST
50K?
0% = 4.92V
100% = 820mV.
VCC
1K
10K
0V
VCC=5VDC
220K
220K
A31
555
8 4
7
3
6
2
1
5
N.C.
1.0uf
0V
0V
VCC
10M
10pf
0V
47K
VCC
10K
10K
0V
1
22K
10uf 50V
A32
LM741
NTE941M
VCC
BK/BRN wire
TOP OF yellow toggle
MANUAL
C
AUTO
F
RED/GRN wire
OR/RED wire
(4016)
Q14
Q15 QUAD SW pin #11
E
12 (4016)
L
4001
U10
4001
U10
FROM LOCK IN
K21
1 GND
2 TRIG
3 OUT
4 RESET
5 CONT. V.
6 THRESH
7 DISCH
8 VCC
FIGURE 8
ON VIC CARD
VERIFIED IN MULTISIM
DONE!