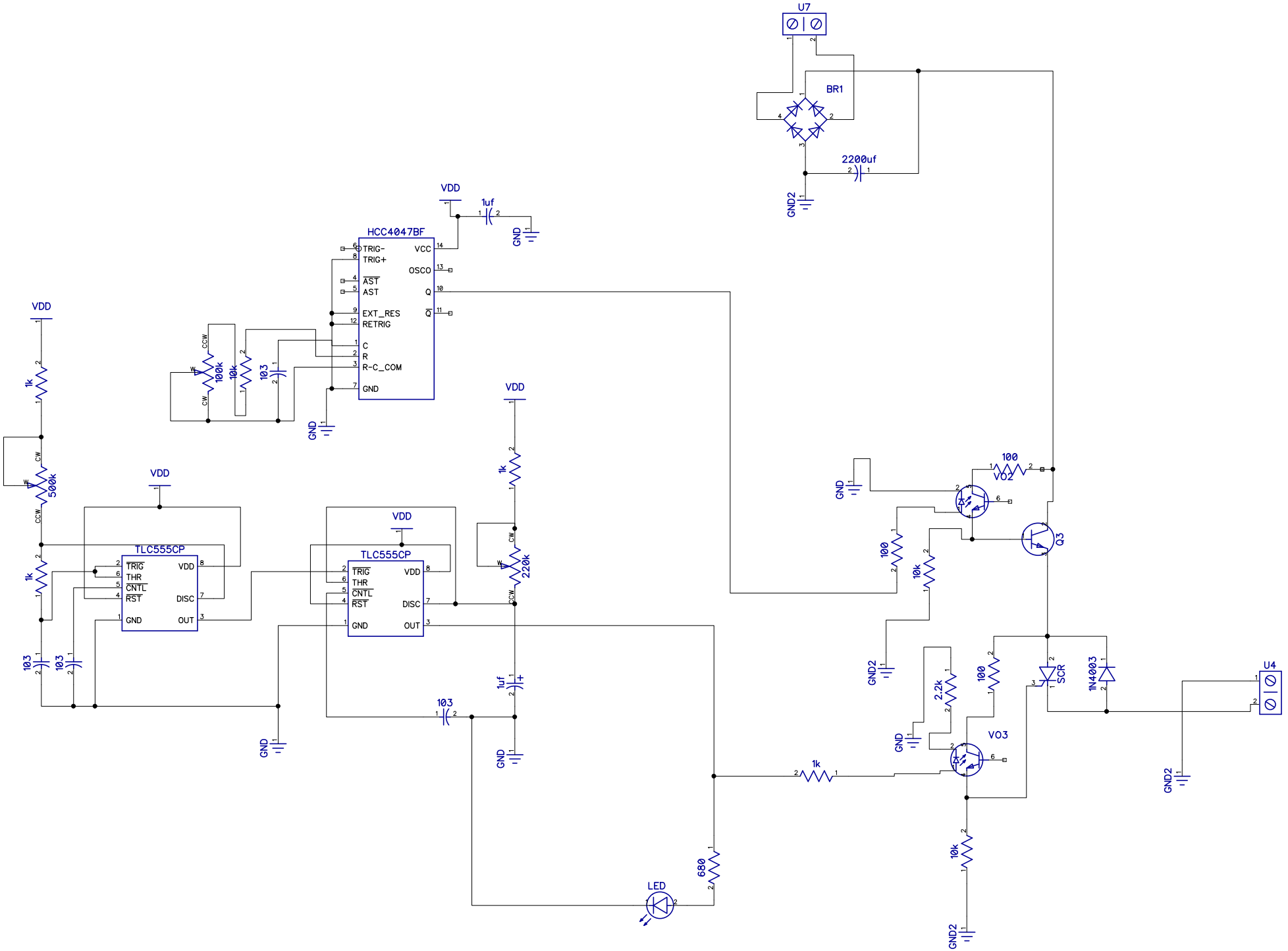
U7
BR1
2200uf
GND2
VDD
1uf
GND
HCC4047BF
TRIG-
TRIG+
AST
AST
EXT_RES
RETRIG
C
R
R-C_COM
GND
VCC
OSCO
Q
Q
100k
10k
103
1k
500k
TLC555CP
TRIG
THR
CNTL
RST
GND
VDD
DISC
OUT
220k
1uf
103
100
VO2
Q3
10k
2.2k
VO3
SCR
1N4003
U4
680
LED