United States Patent [19]

Horvath

[11] **4,107,008**

[45] **Aug. 15, 1978**

[54] **ELECTROLYSIS METHOD FOR PRODUCING HYDROGEN AND OXYGEN**

[75] Inventor: **Stephen Horvath**, St. Ives, Australia

[73] Assignee: **Beeston Company Limited**, Hong Kong, Hong Kong

[21] Appl. No.: **753,610**

[22] Filed: **Dec. 22, 1976**

Related U.S. Application Data

[63] Continuation-in-part of Ser. No. 586,080, Jun. 16, 1975, abandoned, and Ser. No. 632,579, Nov. 17, 1975, said Ser. No. 586,080, is a continuation-in-part of Ser. No. 527,083, Nov. 25, 1974, Pat. No. 3,954,592, said Ser. No. 632,579, is a continuation-in-part of Ser. No. 527,085, Nov. 25, 1974, Pat. No. 3,980,053, said Ser. No. 527,083, and Ser. No. 527,085, each is a continuation-in-part of Ser. No. 485,498, Jul. 3, 1974, abandoned.

[51] **Int. Cl.**[2] **C25B 1/04**

[52] **U.S. Cl.** **204/129**

[58] **Field of Search** 204/129

[56] **References Cited**

U.S. PATENT DOCUMENTS

2,016,442	10/1935	Kilgus	204/129
3,207,684	9/1965	Dotts	204/180 R
3,719,583	3/1973	Ustick	204/180 R

Primary Examiner—R. L. Andrews

Attorney, Agent, or Firm—Biebel, French & Nauman

[57] **ABSTRACT**

A novel electrolytic cell produces a mixture of highly ionized hydrogen and oxygen gases by a method combining electrolysis and radiolysis of an aqueous electrolyte. The electrolyte, which may be a 25% of potassium hydroxide, is introduced into the cell and is simultaneously subjected to an electrolysing current and intense irradiation by electromagnetic radiation of frequency less than 10^{-10} meters.

14 Claims, 26 Drawing Figures

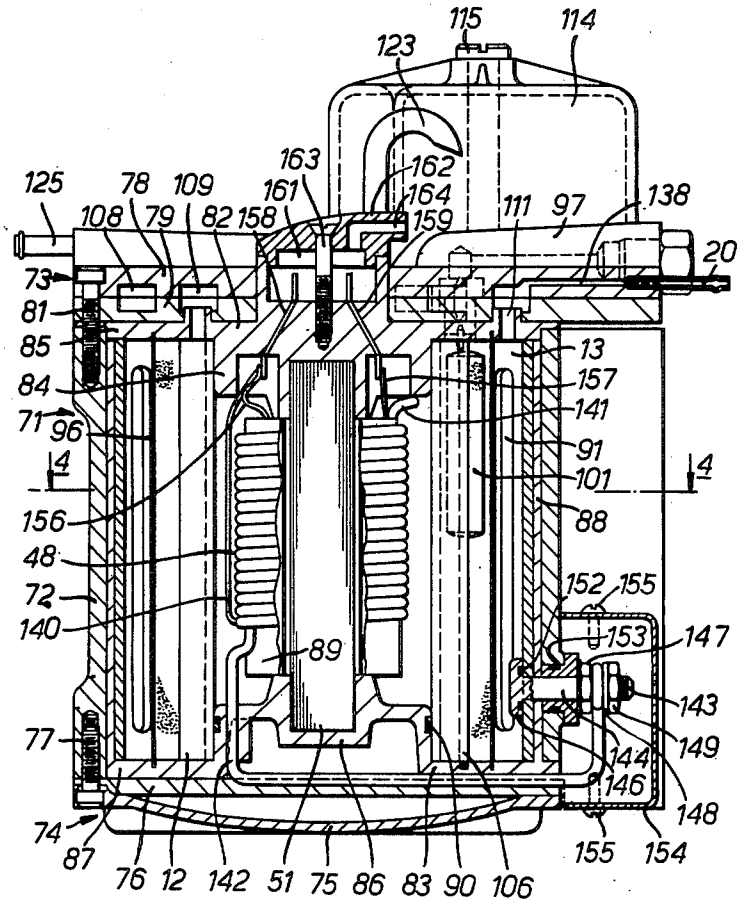

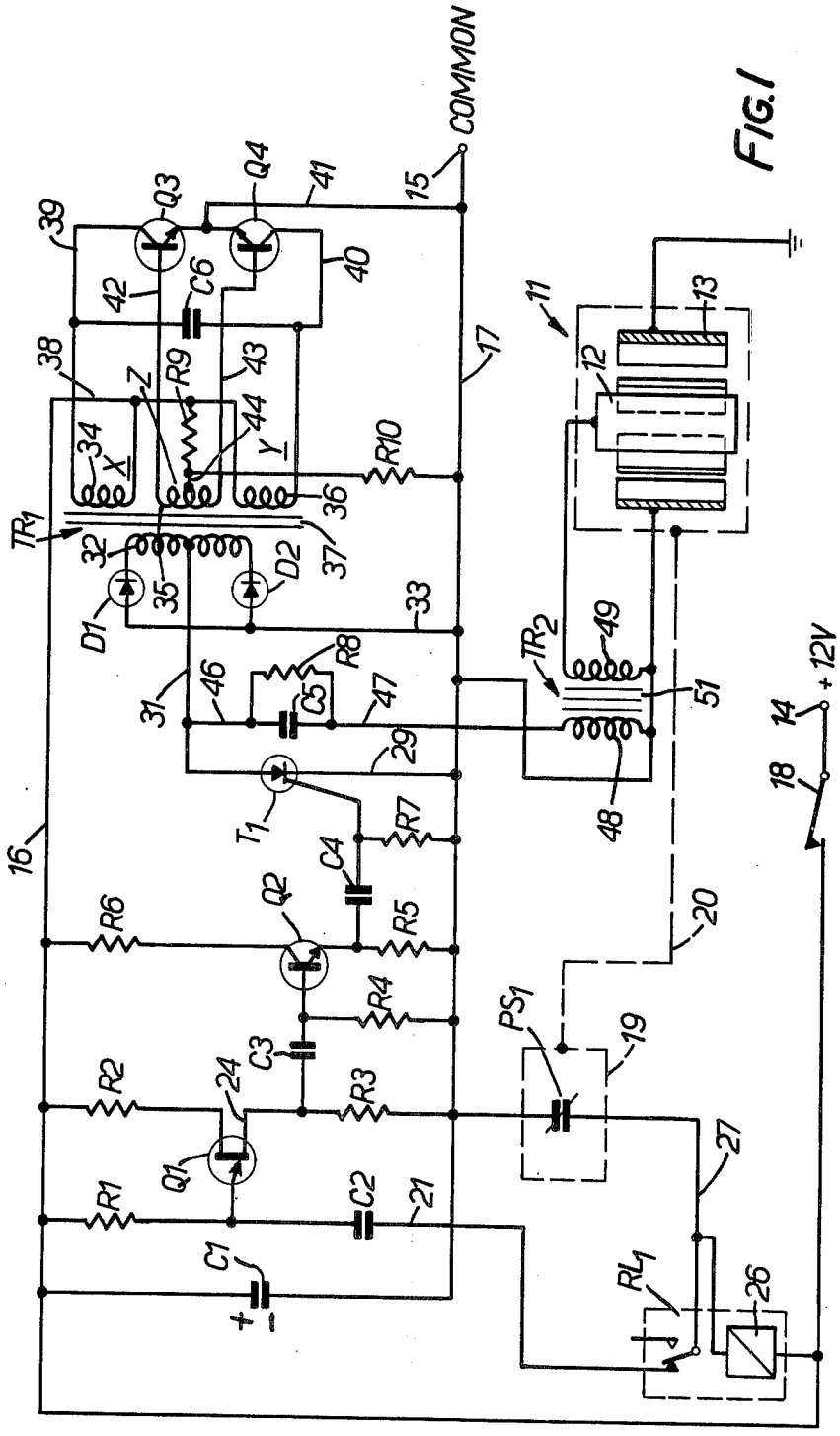
COMMON
Q3
Q4
C6
R9
R10
TR1
D1
D2
R8
C5
TR2
T1
R7
C4
Q2
R6
R5
R4
C3
R2
R3
Q1
R1
C2
C1
PS1
RL1
+12V
FIG. 1

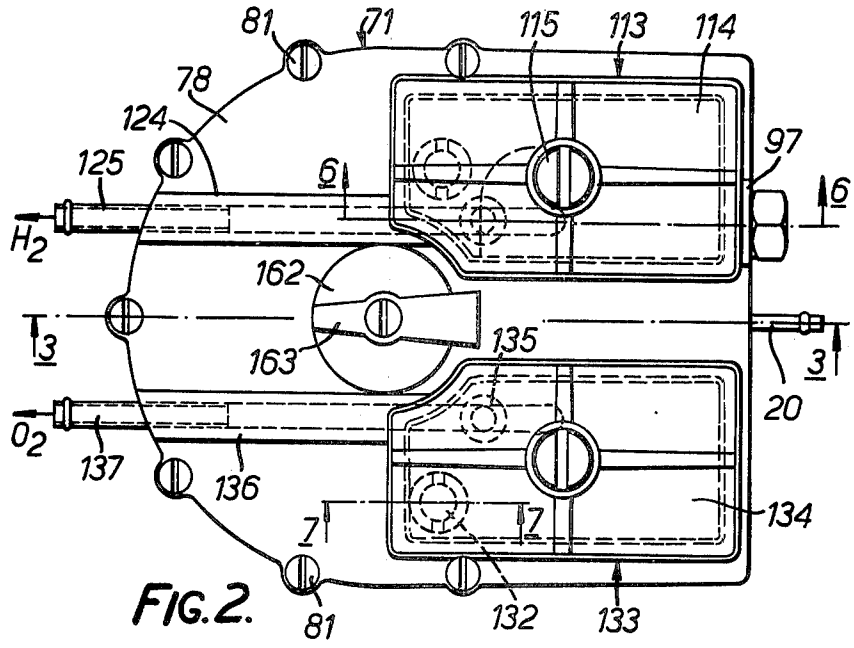
81
71
115
113
114
78
124
125
6
97
6
H_2
162
T3
163
135
3
20
O_2
137
136
7
7
134
81
132
133

FIG. 2.

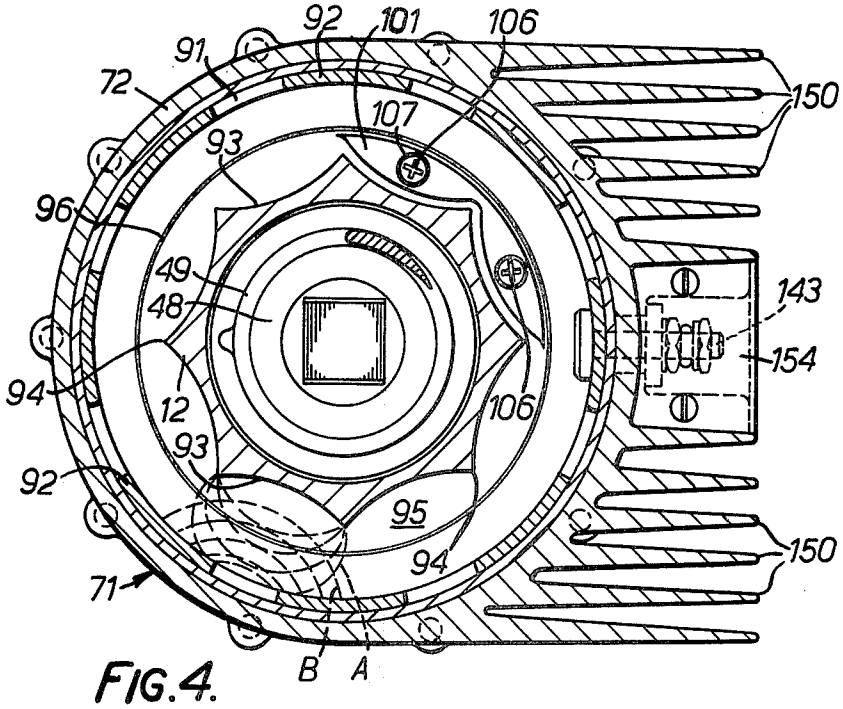
92
101
106
91
72
150
107
93
96
49
48
143
154
94
12
106
93
92
95
94
150
71
B
A

FIG. 4.

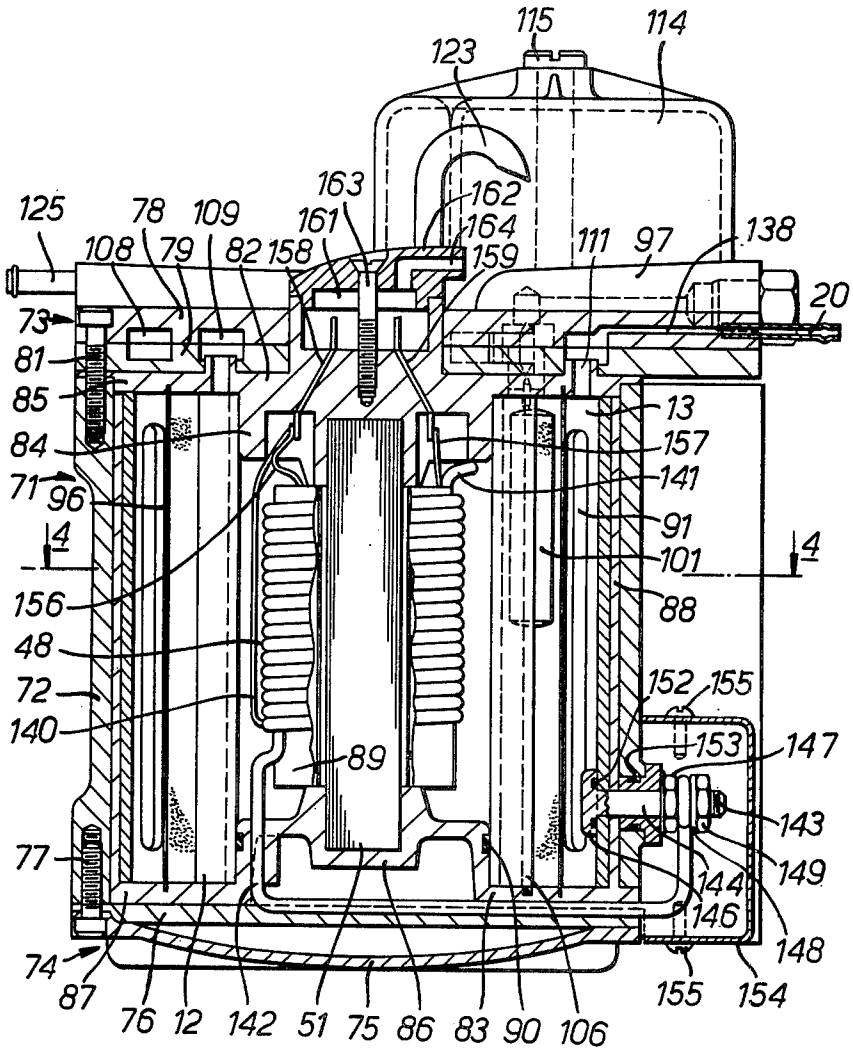
115
114
123
163
162
125
78
109
161
164
108
79
82
158
159
111
97
138
20
73
81
85
84
71
96
4
156
48
72
140
89
77
74
87
76
12
142
51
75
86
83
90
106
13
157
141
91
101
4
88
152
155
153
147
143
149
144
146
148
155
154

FIG. 3.

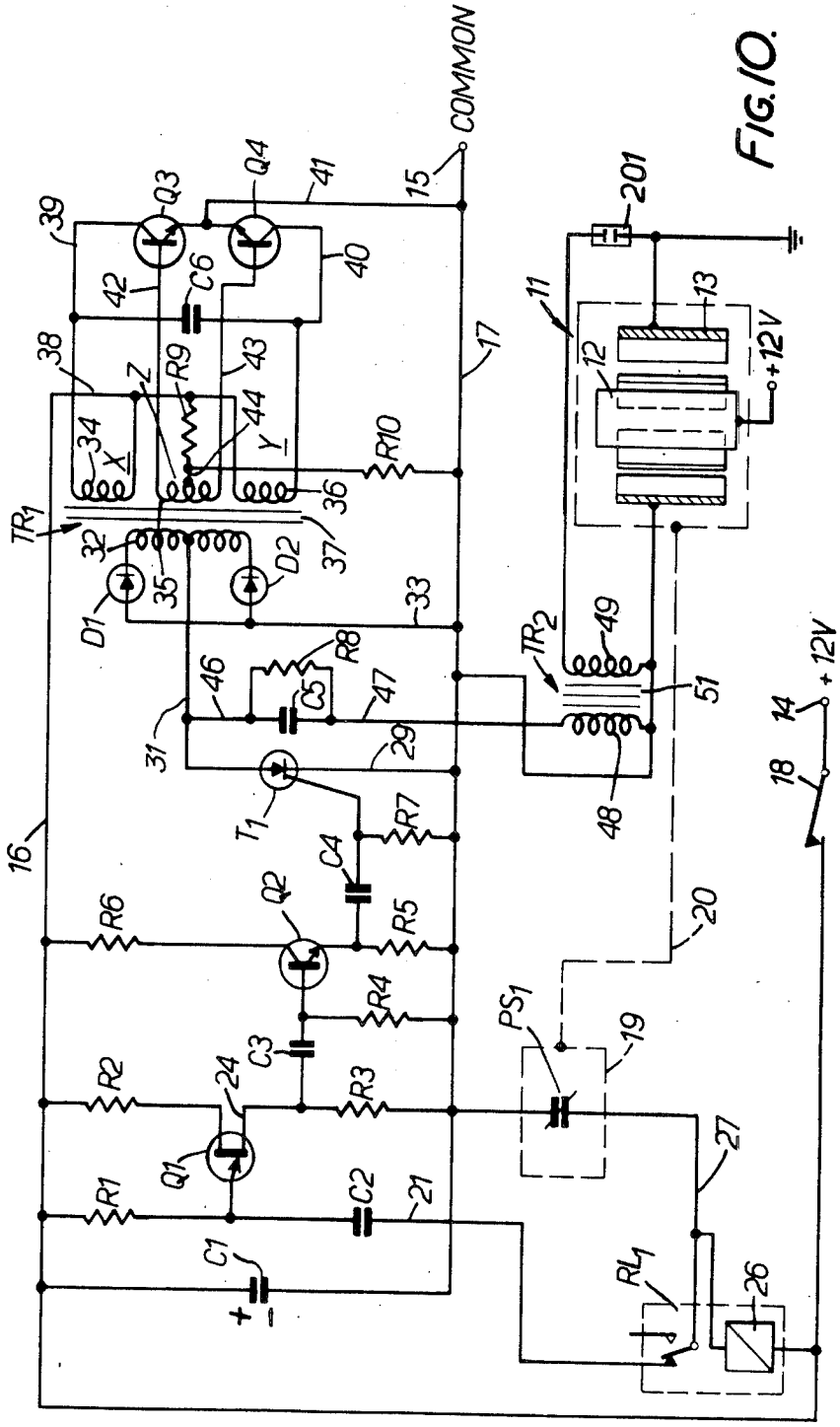
COMMON
Q3
Q4
C6
R9
R10
TR1
D1
D2
R8
C5
T1
R7
C4
Q2
R6
R5
R4
C3
R2
R3
Q1
R1
C2
C1
TR2
+12V
PS1
RL1
201
11
12
13
14
15
16
17
18
19
20
21
24
26
27
31
32
33
34
35
36
37
38
39
40
41
42
43
44
46
47
48
49
51
X
Y

FIG. 10.

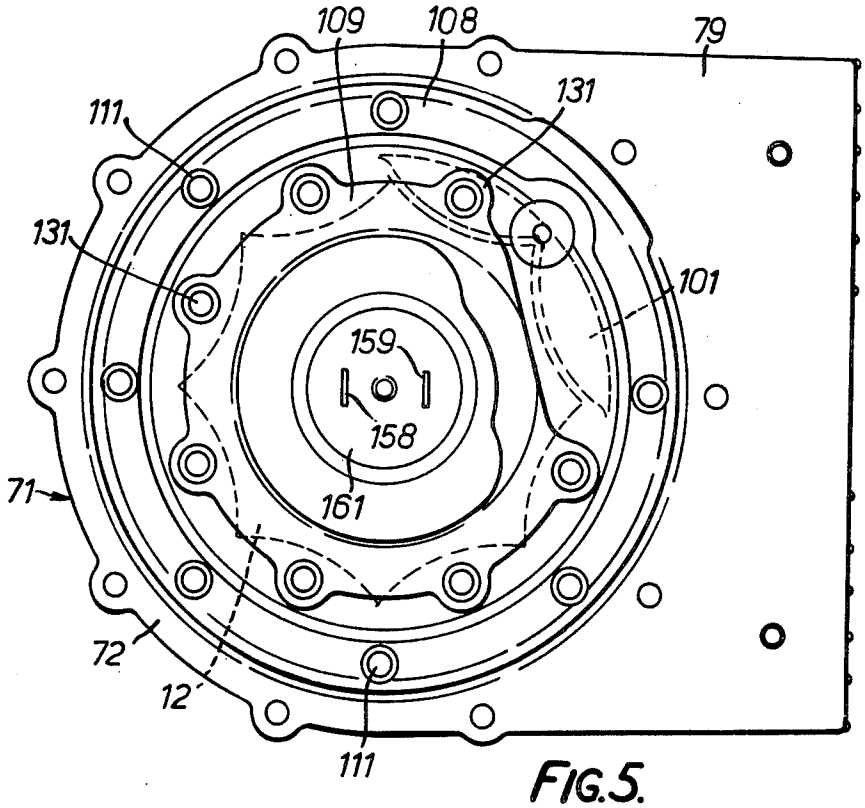

FIG. 5.

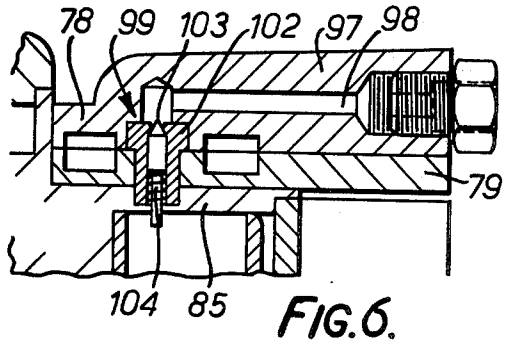

FIG. 6.

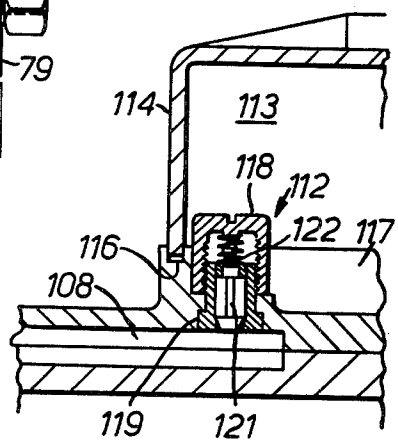

FIG. 7.

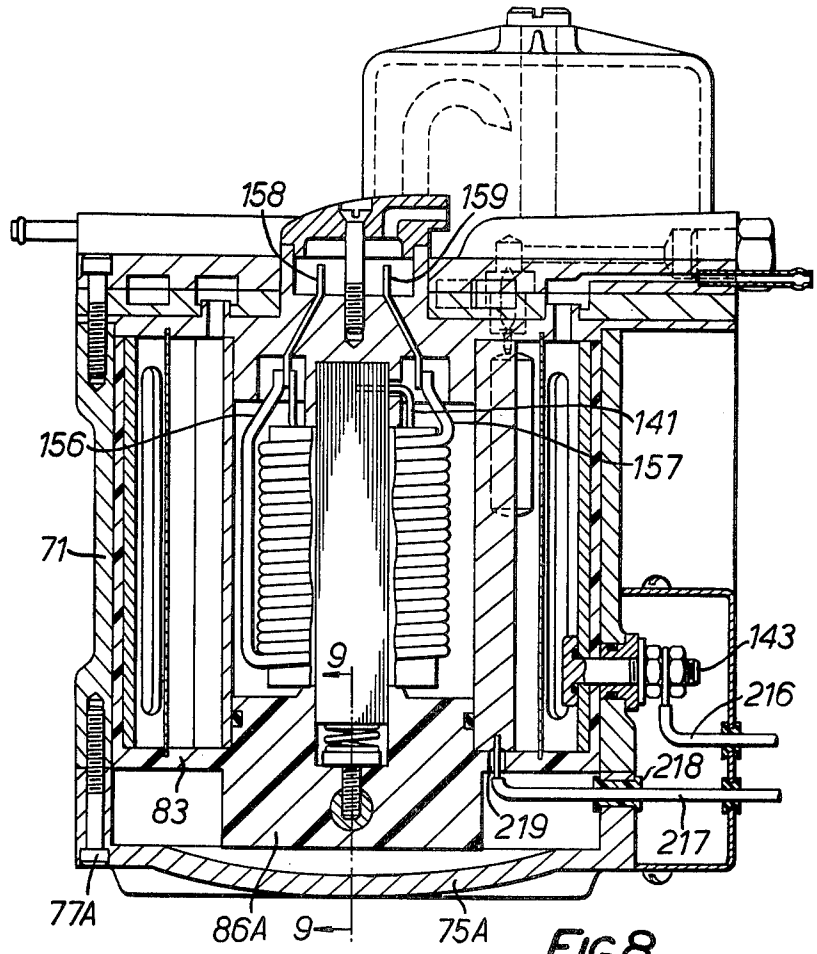
158
159
156
141
157
71
143
9
216
218
83
219
217
77A
86A
9
75A

FIG.8.

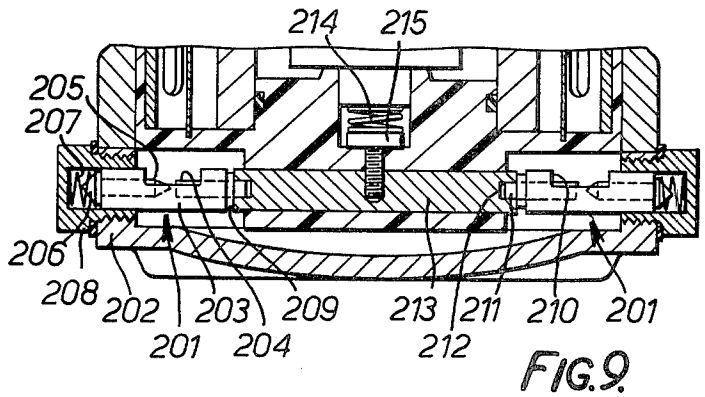
214
215
205
207
206
208
202
201
203
204
209
213
212
211
210
201

FIG.9.

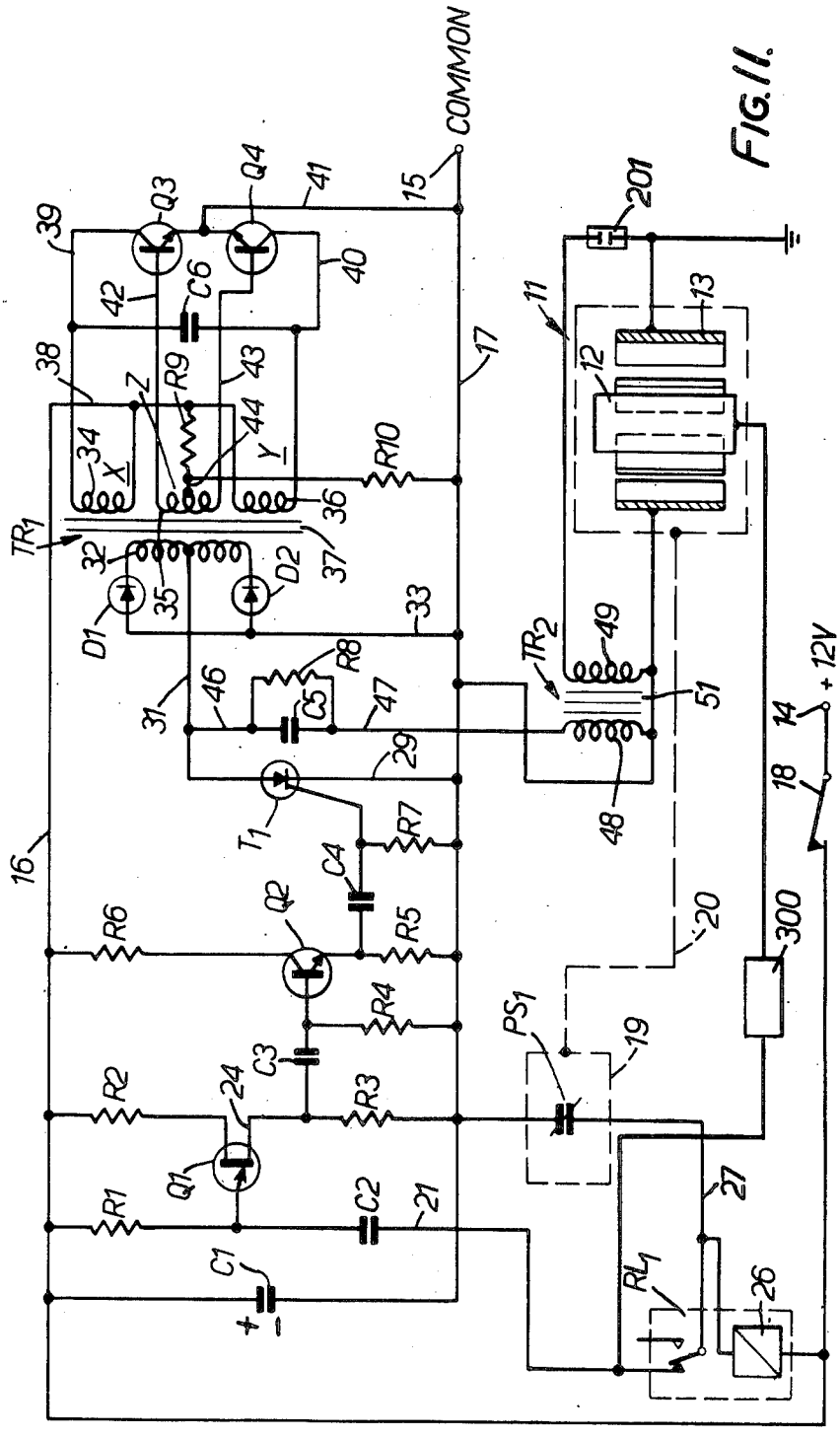
COMMON
Q3
Q4
C6
R9
R10
TR1
D1
D2
R8
C5
TR2
+ 12V
T1
R7
C4
Q2
R6
R5
R4
C3
R2
R3
Q1
R1
C2
C1
PS1
RL1
201
11
12
13
14
15
16
17
18
19
20
21
24
26
27
29
31
32
33
34
35
36
37
38
39
40
41
42
43
44
46
47
48
49
51
300
X
Y
Z

FIG. 11.

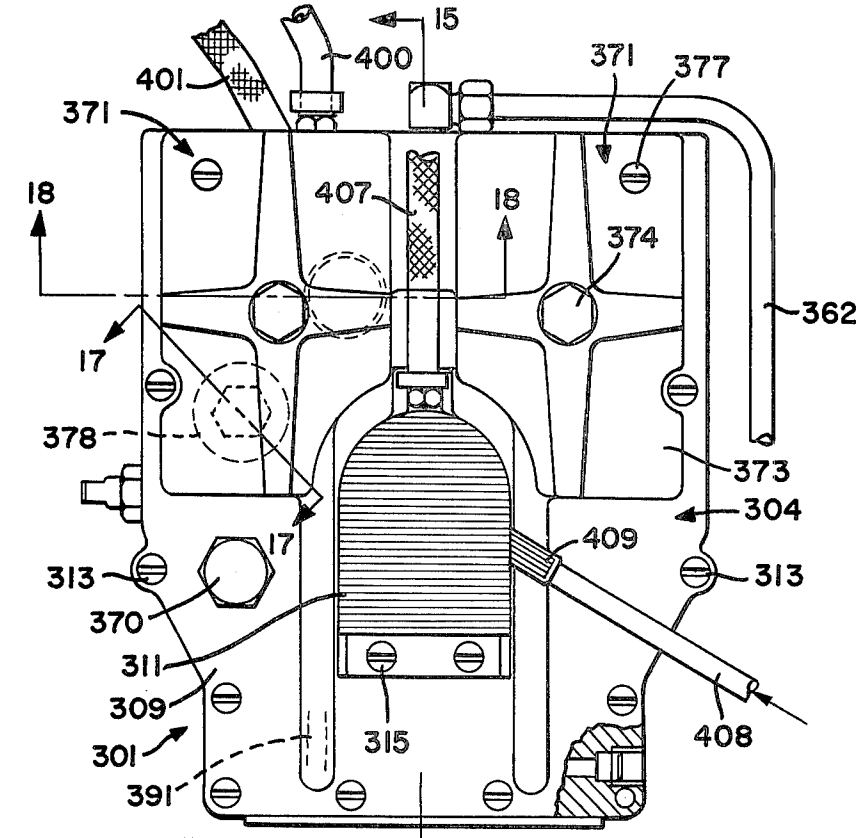
15
400
401
371
377
371
18
407
18
374
362
17
378
373
304
17
409
313
313
370
311
309
315
408
301
391
15

FIG-12

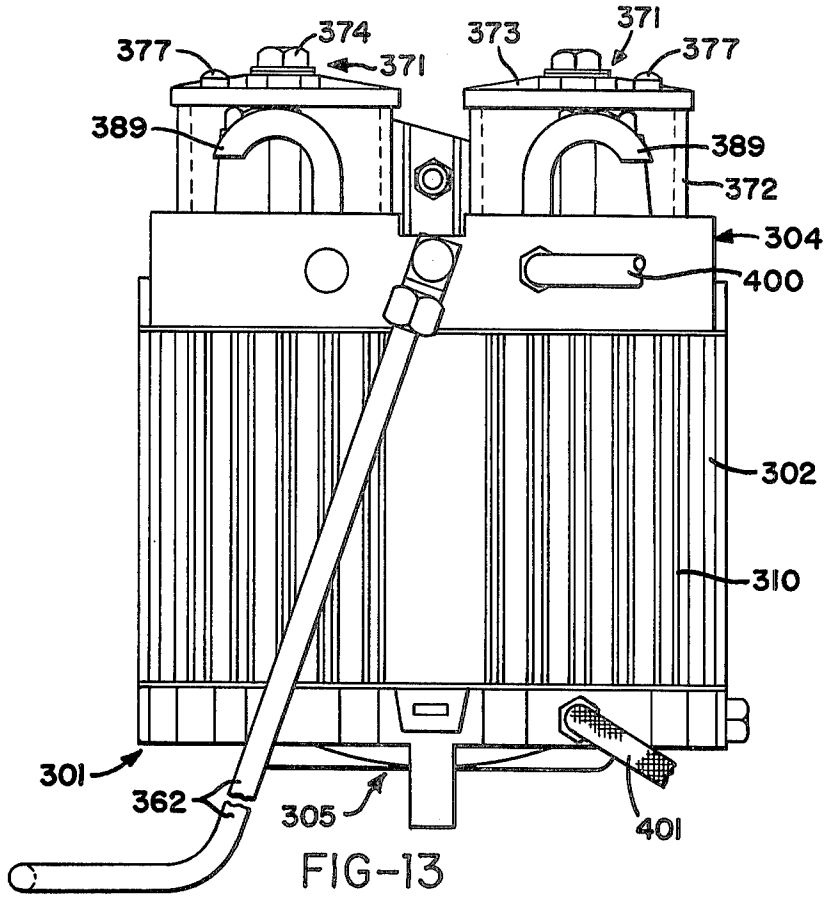
377
374
371
373
371
377
389
389
372
304
400
302
310
301
362
305
401

FIG-13

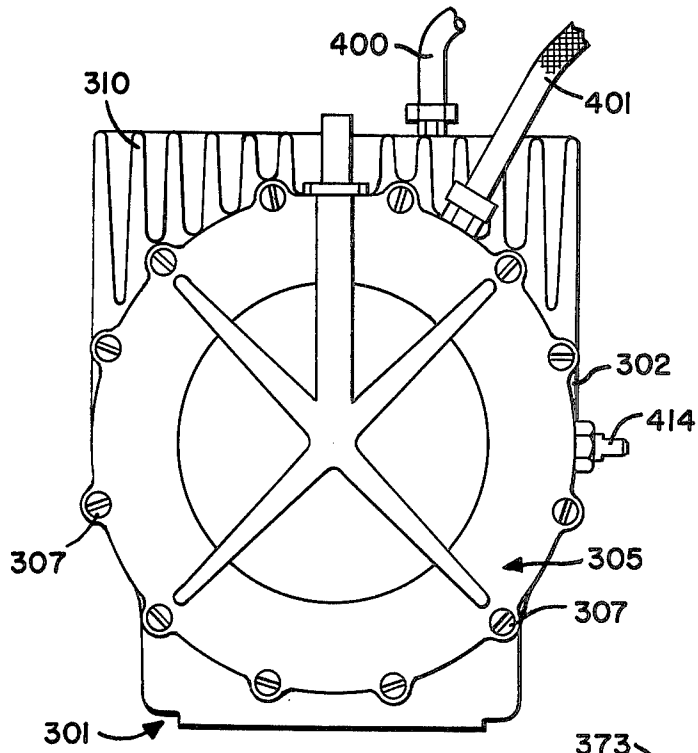
400
401
310
302
414
307
305
307
301

FIG-14

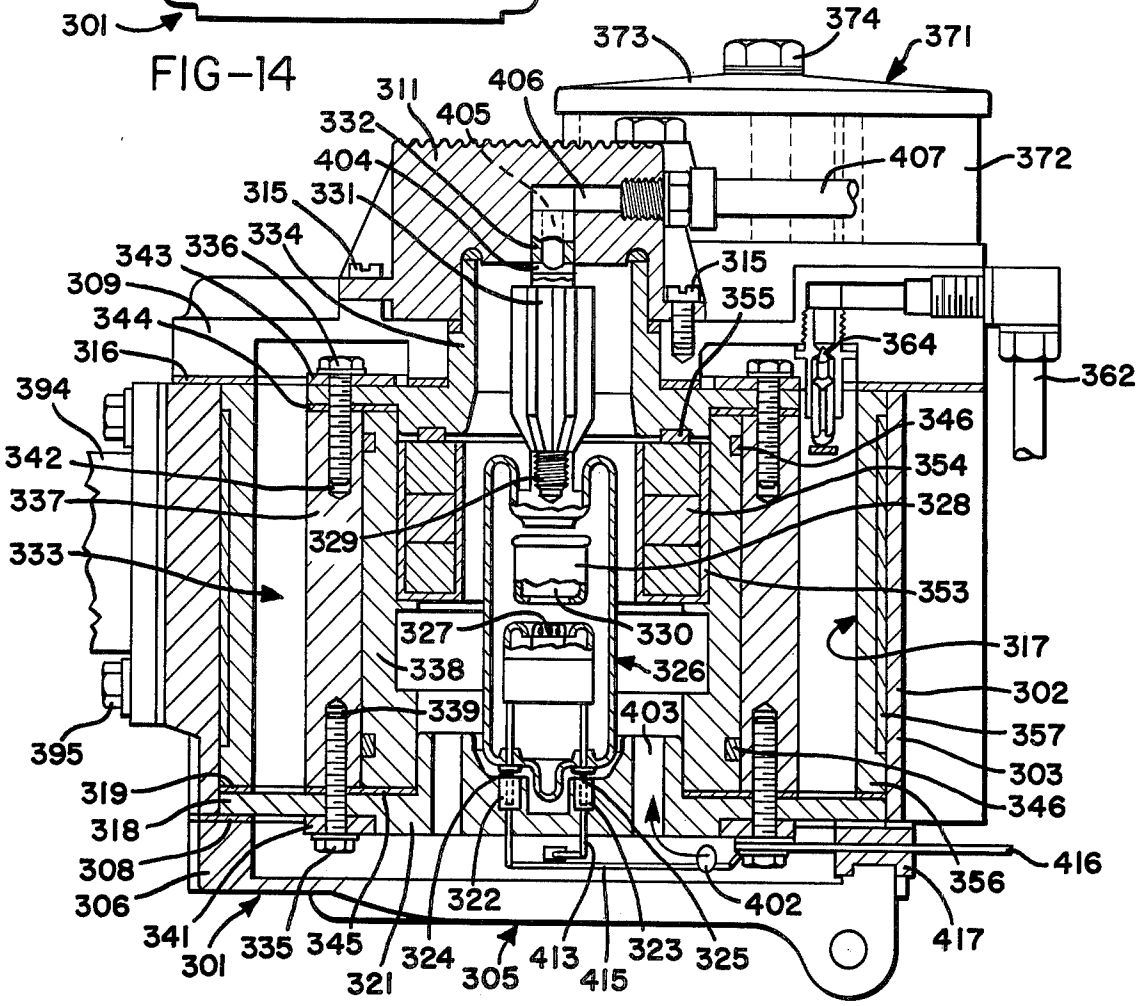
373
374
371
311
406
332
405
404
407
372
315
331
343
336
334
315
309
355
344
364
316
362
394
346
342
354
337
328
329
333
353
327
330
317
338
326
302
339
403
357
395
303
319
346
318
308
416
306
356
322
402
341
417
301
335
345
324
305
413
323
325
321
415

FIG-15

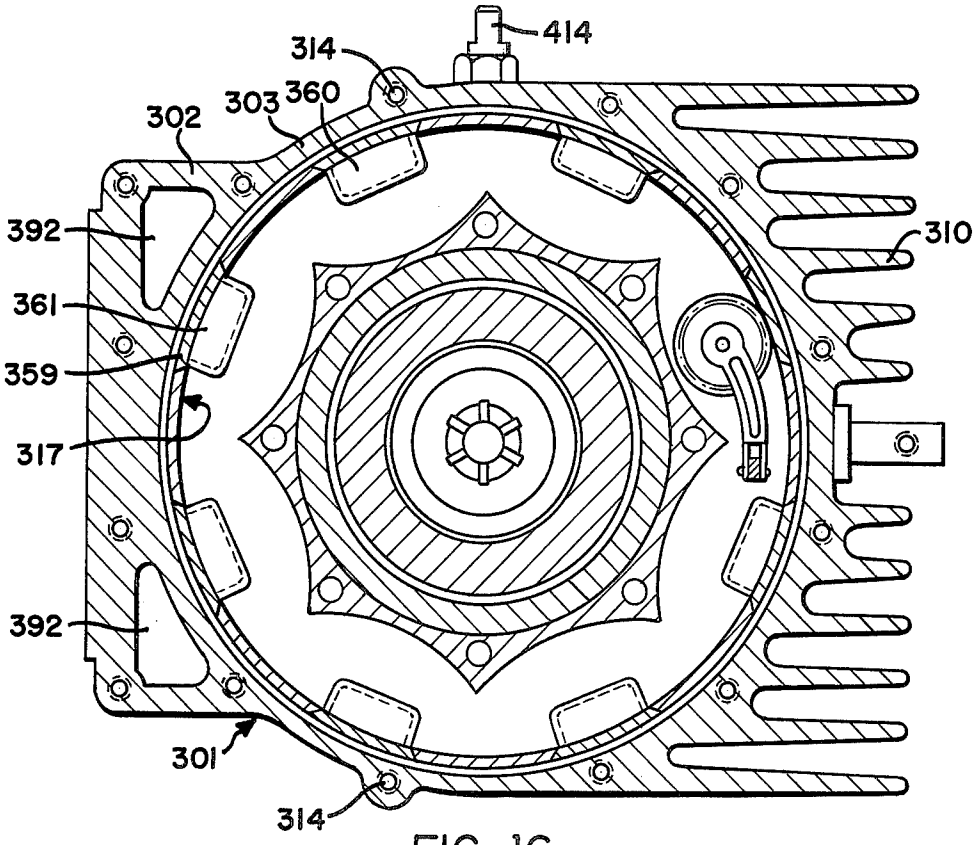
414
314
303
360
302
392
361
359
317
392
301
314
310

FIG-16

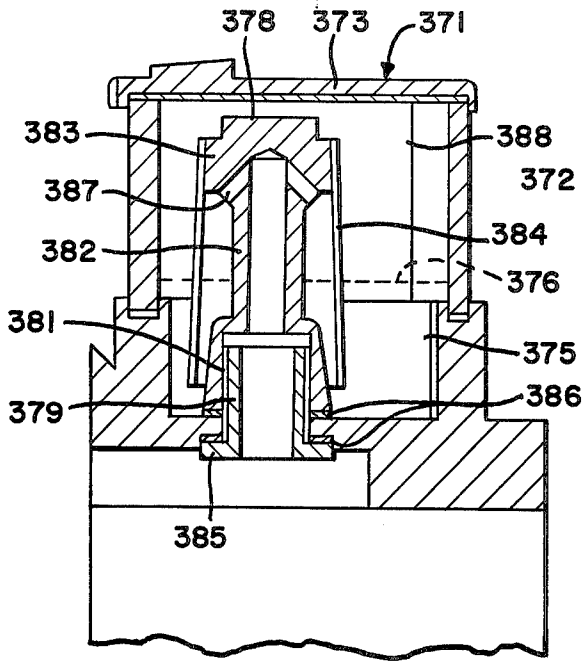
378
373
371
383
388
372
387
384
382
376
381
375
379
386
385

FIG-17

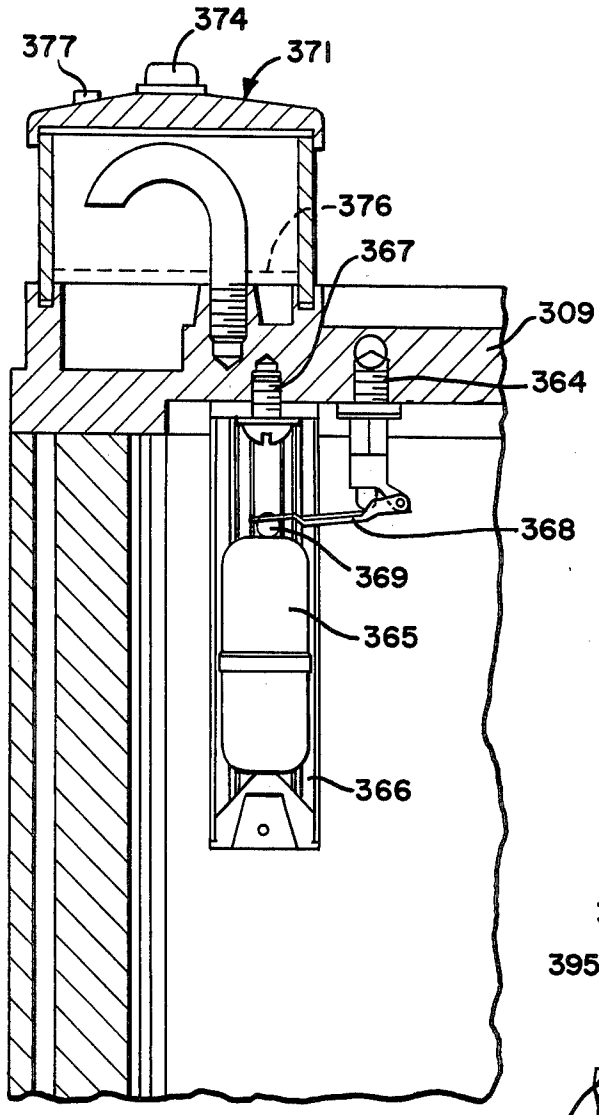
374
377
371
376
367
309
364
368
369
365
366

FIG-18

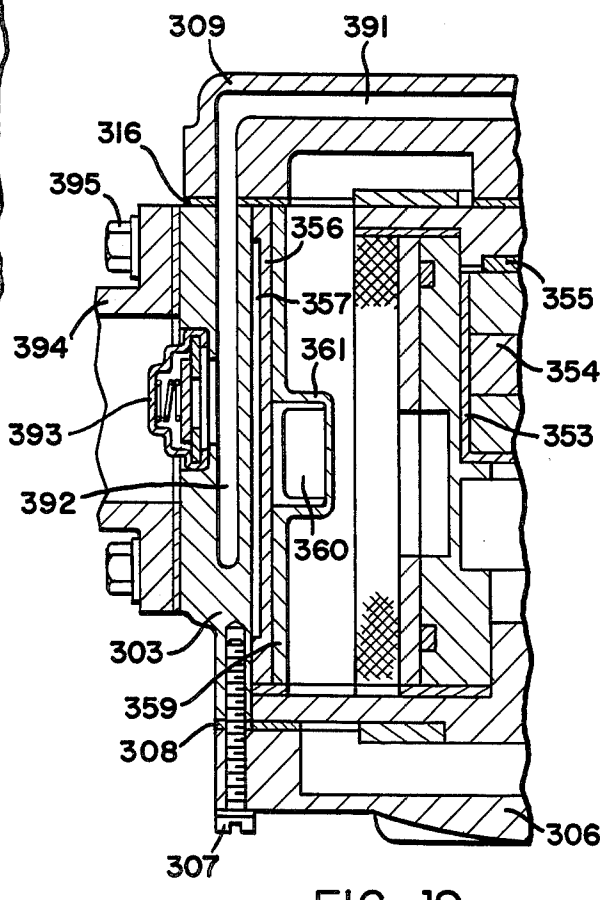
309
391
316
395
356
357
355
394
361
354
393
353
392
360
303
359
308
306
307

FIG-19

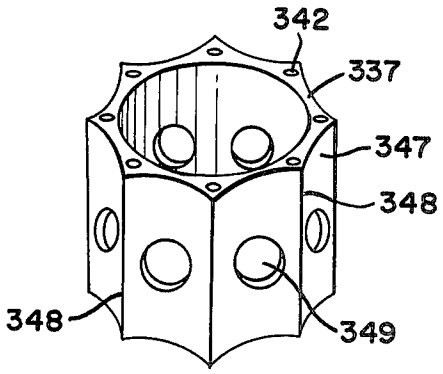

FIG-20

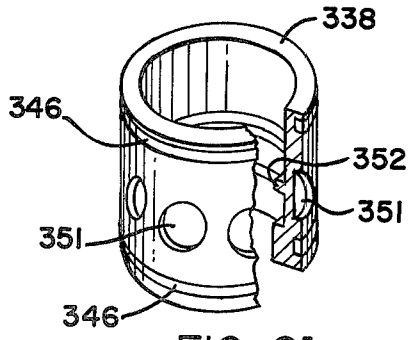

FIG-21

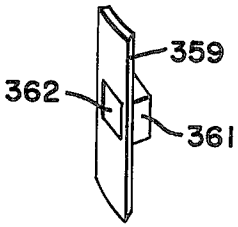

FIG-23

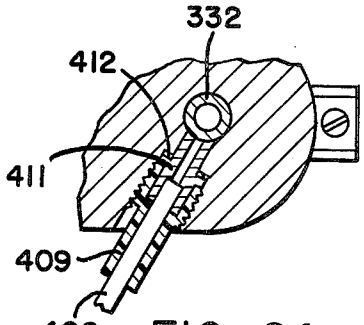

FIG-24

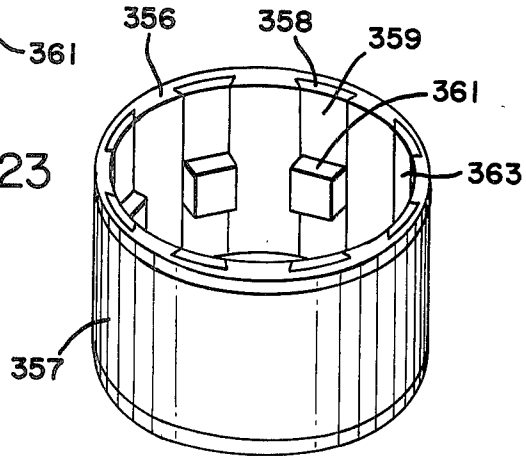

FIG-22

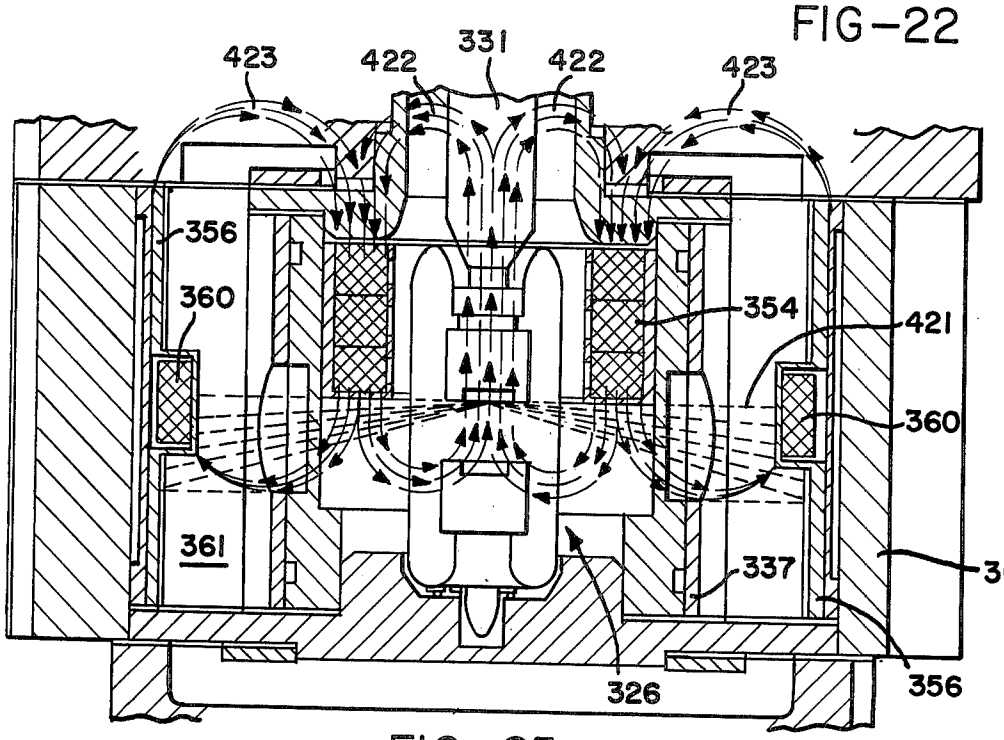

FIG-25

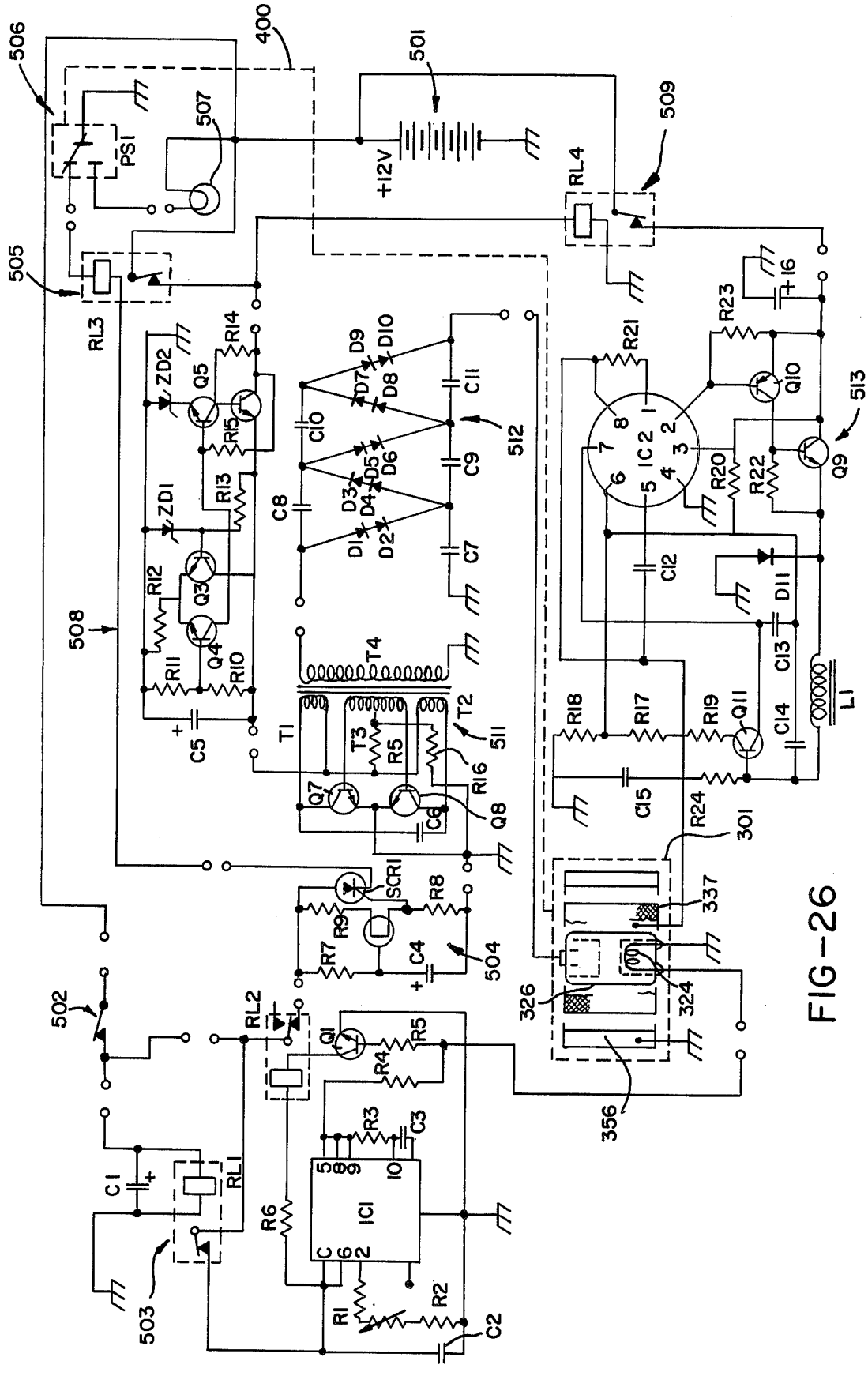
506
400
501
507
PS1
+12V
509
RL4
505
RL3
R14
ZD2
Q5
R15
ZD1
R13
R12
Q3
Q4
R11
R10
C5
508
D9
D10
D7
D8
C11
C10
512
C8
C9
D3
D4
D5
D6
D1
D2
C7
T4
T1
T3
R5
T2
511
R16
Q7
Q8
C6
SCR1
R8
R9
R7
C4
504
502
RL2
Q1
R5
R4
R3
C3
C1
RL1
503
R6
IC1
R1
R2
C2
R21
R23
C16
Q10
513
IC2
R20
R22
Q9
C12
D11
C13
L1
R18
R17
R19
Q11
C14
C15
R24
301
337
326
324
356

FIG-26

ELECTROLYSIS METHOD FOR PRODUCING HYDROGEN AND OXYGEN

CROSS REFERENCE TO RELATED APPLICATIONS

This application is a continuation-in-part of application Ser. No. 586,080, filed June 16, 1975, (now abandoned) which is a continuation-in-part of Ser. No. 527,083 filed Nov. 25, 1974 (now U.S. Pat. No. 3,954,592), which is a continuation-in-part of Ser. No. 485,498, filed July 3, 1974 and now abandoned. This application is also a continuation-in-part of application Ser. No. 632,579, filed Nov. 17, 1975, which is a continuation-in-part of Ser. No. 527,085, filed Nov. 25, 1974 (now U.S. Pat. No. 3,980,053), which is a continuation-in-part of said Ser. No. 485,498.

BACKGROUND OF THE INVENTION

This invention relates to the general field of electrolysis and has particular, but not exclusive, application to the electrolysis of water to form hydrogen and oxygen.

In an electrolysis process a potential difference is applied between an anode and a cathode in contact with an electrolytic conductor to produce an electric current through the electrolytic conductor.

Many molten salts and hydroxides are electrolytic conductors but usually the conductor is a solution of a substance which dissociates in the solution to form ions. The term "electrolyte" will be used herein to refer to a substance which dissociates into ions, at least to some extent, when dissolved in a suitable solvent. The resulting solution will be referred to as an "electrolyte solution."

In a simple electrolysis porcess the mass of substance liberated at an anode or cathode is, in accordance with Faraday's laws of electrolysis, strictly proportional to the quantity of electricity passed between the anode and cathode. The rate of decomposition of the electrolyte is thus limited and it is generally uneconomical for example, to generate hydrogen and oxygen from water commercially by an electrolysis process.

it is known that compounds, including electrolytes such as water, can be decomposed into their constituent elements by irradiation with short wave electromagnetic radiation. Such radiation induced dissociation or decomposition may be termed "radiolysis". For example, a paper by Dr. Akibumi Danno entitled "Producing Hydrogen with Nuclear Energy" published in the "Chemical Economy and Engineering Review" of June, 1974 describes in some detail the radiolysis of water and a number of hydrocarbons with an explanation of the elementary reactions involved in such radiolysis. Briefly, it is found that irradiation with short wave x-rays or gamma rays, i.e. electromagnetic radiation of wave length less than 10^{-10} meters, results in direct decomposition of the compounds concerned. For example, if water is irradiated with gamma radiation the water will be dissociated into hydrogen and oxygen. Danno proposes the use of a nuclear reactor as a source of radiation on a massive scale but concludes that water radiolysis is not a very efficient method of producing hydrogen and he proposes instead a process involving a radiolysis of carbon dioxide to produce carbon monoxide and oxygen and a subsequent conversion of the carbon monoxide to hydrogen gas by the conventional water/gas conversion process.

SUMMARY OF THE INVENTION

The present invention provides for an electrolysis process in which radiolysis is also present. It is found that with the combination of electrolysis and radiolysis the yield of decomposition products can be greater than that achieved by either a simple electrolysis process or simple radiolysis. The yield rate can be very much improved in the combined electrolysis and radiolysis process by providing a magnetic field in the electrolytic conductor which provides preferred paths for the high speed photons of the short wave electromagnetic radiation and also for the ions in the electrolytic conductor thereby increasing the possibility for collision between the electrons and the ions with a subsequent improved radiolysis yield.

In one method according to the invention, pulses of high voltage electrical energy are applied between the anode and cathode of an electrolytic cell in such a manner as to generate the necessary short wave length radiation for radiolysis. In another method according to the invention pulses of high voltage electrical energy are discharged in one or more short wave length radiation generators separate from the anode and cathode but disposed such that the electrolytic conductor within the cell is irradiated by the short wave radiation produced thereby. The high voltage pulses of electrical energy can be generated by a quite modest direct current input supplied and the methods according to the invention will produce a greatly increased yield of decomposition products over that which could be achieved by passing the supply current through the electrolytic conductor.

The invention also provides apparatus adapted to practise the methods of the invention.

As previously mentioned, the invention is particularly applicable to the decomposition of water or aqueous solutions to generate hydrogen and oxygen gases and, in order that the invention may be more fully explained, apparatus designed specifically for such generation of hydrogen and oxygen will now be described in detail with reference to the accompanying drawings.

BRIEF DESCRIPTION OF THE DRAWINGS

In the drawings:

FIG. **1** is a circuit diagram for one apparatus constructed in accordance with the invention;

FIG. **2** is a plan view of an electrolytic cell of the apparatus;

FIG. **3** is a cross-section on the line **3—3** in FIG. **2**;

FIG. **4** is a cross-section on the line **4—4** in FIG. **3**;

FIG. **5** is a plan view of the electrolytic cell with certain upper parts removed;

FIG. **6** is a cross-section on the line **6—6** in FIG. **2**;

FIG. **7** is a cross-section on the line **7—7** in FIG. **2**;

FIG. **8** is a vertical cross-section through a modified form of electrolytic cell;

FIG. **9** is a cross-section on the line **9—9** in FIG. **8**;

FIG. **10** is a circuit diagram for the modified apparatus of FIGS. **8** and **9**;

FIG. **11** is a circuit diagram for a further modified apparatus;

FIG. **12** is a plan view of an electrolytic cell of a further embodiment of the invention;

FIG. **13** is a rear view of the cell illustrated in FIG. **12**;

FIG. **14** is an underneath view of the cell illustrated in FIG. **12**;

FIG. 15 is a vertical cross-section on the line 15—15 in FIG. 12;

FIG. 16 is a horizontal cross-section through the cell of FIG. 12;

FIG. 17 is a cross-section on the line 17—17 in FIG. 12;

FIG. 18 is a cross-section on the line 18—18 in FIG. 12;

FIG. 19 is a cross-section on the line 19—19 in FIG. 12;

FIG. 20 is a perspective view of an anode component of the cell shown in FIG. 12;

FIG. 21 is a broken perspective view of an anode sleeve component of the cell shown in FIGS. 12;

FIG. 22 is a perspective view of a cathode assembly of the cell shown in FIG. 12;

FIG. 23 is a perspective view of a component of the assembly shown in FIG. 22;

FIG. 24 is a scrap cross-section through an electrical connection incorporated in the cell;

FIG. 25 is a vertical cross-section through the cell illustrating diagrammatically paths of electromagnetic radiation and magnetic fields within the cell; and

FIG. 26 is an electric circuit diagram for the apparatus illustrated in FIGS. 12 to 25.

DESCRIPTION OF THE PREFERRED EMBODIMENTS

The apparatus illustrated in FIGS. 1 to 7 comprises an electrolytic cell denoted generally as 11 and having an anode 12 and cathode 13. The apparatus has an electric circuit such as to generate high voltage pulses of electrical energy which are applied between the anode 12 and the cathode 13. Specifically, the circuit is such as to develop the required high voltage pulses from a source of direct current electrical energy which may for example be a 12 volt battery, connected between terminals 14, 15. Line 16 from terminal 14 may be considered as receiving the positive input and line 17 from terminal 15 may be considered as a common negative for the circuit. Line 16 includes a simple ON/OFF master control switch 18.

As shown in FIG. 1 the electrical circuit comprises pulse generator circuitry comprising unijunction transistor Q1 with associated resistors R1, R2, R3 and capacitors C2 and C3. This circuity produces pulses which are used to trigger an NPN silicon power transistor Q2 which in turn provides via a capacitor C4 triggering pulses for a thyristor T1.

Resistor R1 and a capacitor C1 are connected in series in a line 21 extending to one of the fixed contacts of a relay RL1. The coil 26 of relay RL1 is connected between line 16 and a line 27 which extends from the moving contact of the relay to the common negative line 17 via a normally closed pressure operated switch 19. The pressure control line 20 of switch 19 is connected in a manner to be described below to a gas collection chamber of electrolytic cell 11 in order to provide a control connection whereby switch 19 is opened when the gas in the collection chamber reaches a certain pressure. However, provided that switch 19 remains closed, relay RL1 will operate when master control switch 18 is closed to provide a connection between lines 21 and 27 thereby to connect capacitor C2 to the common negative line 17. The main purpose of relay RL1 is to provide a slight delay in this connection between the capacitor C2 and the common negative line 7 when the circuit is first energized. This will delay the generation of triggering pulses to thyristor T1 until a required electrical condition has been achieved in the transformer circuitry to be described below. It is preferred that relay RL1 be hermetically sealed and have a balance armature so that it can operate in any position and can withstand substantial shock or vibration.

When the connection between capacitor C2 and line 17 is made via relay RL1, uninjunction transistor Q1 will act as an oscillator to provide positive output pulses in line 24 at a pulse rate which is controlled by the ratio of R1:C1 and at a pulse strength determined by the ratio of R2:R3. These pulses will charge the capacitor C3. Electrolytic capacitor C1 is connected directly between the common positive line 16 and the common negative line 17 to filter the circuitry from all static noise.

Resistor R1 and capacitor C2 are chosen such that at the input to transistor Q1 the pulses will be of saw tooth form. This will control the form of the pulses generated in the subsequent circuitry, and the saw tooth pulse form is chosen since it is believed that it produces the most satisfactory operation of the pulsating circuitry. It should be stressed, however, that other pulse forms, such as square wave pulses, could be used. Capacitor C3, which is charged by the output pulses of transistor Q1, discharges through a resistor R4 to provide triggering signals for transistor Q2. Resistor R4 is connected to the common negative line 17 to serve as a gate current limiting device for transistor Q2.

The triggering signals produced by transistor Q2 via the network of capacitor C3 and resistor R4 will be in the form of positive pulses of sharply spiked form. The collector of transistor Q2 is connected to the positive supply line 16 through resistor R6 while the emitter of that transistor is connected to the common negative line 17 through resistor R5. These resistors R5 and R6 control the strength of current pulses applied to a capacitor C4 which discharges through a resistor R7 to the common negative line 17, thereby to apply triggering signals to the gate of thyristor T1. The gate of thyristor T1 receives a negative bias from the common negative line via resistor R7 which thus serves to prevent triggering of the thyristor by the inrush currents.

The triggering pulses applied to the gate of thyristor T1 will be very sharp spikes occurring at the same frequency as the saw tooth wave form pulses established by unijunction transistor Q1. It is preferred that this frequency be of the order of 10,00 pulses per second and details of specific circuit components which will achieve this result are listed below. Transistor Q2 serves as an interface between unijunction transistor Q1 and thyristor T1, preventing backflow of EMF from the gate of the thyristor, which might otherwise interfere with the operation of transistor Q1. Because of the high voltages being handled by the thyristor and the high back EMF applied to transistor Q2, the latter transistor must be mounted on a heat sink.

The cathode of thyristor T1 is connected via a line 29 to the common negative line 17 and the anode is connected via a line 31 to the centre of the secondary coil 32 of a first stage transformer TR1. The two ends of transformer coil 32 are connected via diodes D1 and D2 and a line 33 to the common negative line 17 to provide full wave rectification of the transformer output.

First stage transformer TR1 has three primary coils 34, 35, 36 wound together with secondary coil 32 about a core 37. This transformer may be of conventional half cup construction with a ferrite core. The secondary coil may be wound on to a coil former disposed about the

core and primary coils **34** and **36** may be wound in bifilar fashion over the secondary coil. The other primary coil **35** may then be wound over the coils **34, 36**. Primary coils **34** and **36** are connected at one side by a line **38** to the uniform positive potential of circuit line **16** and at their other sides by lines **39, 40** to the collectors of transistors Q3, Q4. The emitters of transistors Q3, Q4 are connected permanently via a line **41** to the common negative line **17**. A capacitor C6 is connected between lines **39, 40** to act as a filter preventing any potential difference between the collectors of transistors Q3, Q4.

The two ends of primary coil **35** are connected by lines **42, 43** to the bases of transistors Q3, Q4. This coil is centre tapped by a line **44** connected via resistor R9 to the positive line **16** and via resistor R10 to the common negative line **17**.

When power is first applied to the circuit, transistors Q3 and Q4 will be in their non-conducting states and there will be no current in primary coils **34, 36**. However, the positive current in line **16** will provide via resistor R9 a triggering signal applied to the centre tap of coil **35**, and this signal operates to trigger alternate high frequency oscillation of transistors Q3, Q4, which will result in rapid alternating pulses in primary coils **34,36**. The triggering signal applied to the centre tap of coil **35** is controlled by the resistor network provided by resistors R9 and R10 such that its magnitude is not sufficient to enable it to trigger Q3 and Q4 simultaneously but is sufficient to trigger one of those transistors. Therefore only one of the transistors is fired by the initial triggering signal to cause a current to flow through the respective primary coil **34** or **36**. The signal required to hold the transistor in the conducting state is much less than that required to trigger it initially, so that when the transistor becomes conductive, some of the signal applied to the centre tap of coil **33** will be diverted to the non-conducting transistor to trigger it. When the second transistor is thus fired to become conductive, current will flow through the other of the primary coils **34,36** and since the emitters of the two transistors are directly connected together, the positive output of the second transistor will cause the first-fired transistor to be shut off. When the current drawn by the collector of the secondfired resistor drops, part of the signal on the centre tap of coil **35** is diverted back to the collector of the first transistor which is re-fired. It will be seen that the cycle will then repeat indefinitely, so that transistors Q3, Q4 are alternately fired and shut off in very rapid sequence. Thus current pulses flow in alternate sequence through primary coils **34, 36** at a very high frequency, this frequency being constant and independent of changes in input voltage to the circuit. The rapidly alternating pulses in primary coils **34** and **36**, which will continue for so long as master control switch **18** remains closed, will generate higher voltage signals at the same frequency in the transformer secondary coil **32**.

A dump capacitor C5 bridged by a resistor R8 is connected by a line **46** to the line **31** from the secondary coil of transformer TR1 and provides the output from that transformer which is fed via line **47** to a second stage transformer TR2.

When thyristor T1 is triggered to become conductive the full charge of dump capacitor C5 is released to second stage transformer TR2. At the same time the first stage of transformer TR1 ceases to function because of this momentary short circuit placed across it and consequently thyristor T1 releases, i.e. becomes non-conductive. This permits charge to be built up again in dump capacitor C5 for release when the thyristor is next triggered by a signal from transistor Q2. Thus during each of the intervals when the thyristor is in its non-conducting state the rapidly alternating pulses in primary coils **34, 36** of transformer TR1 produced by the continuously oscillating transistors Q3, Q4 produce, via the transformer coupling, relatively high voltage output pulses which build up a high charge in capacitor C5 and this charge is released suddenly when the thyristor is triggered. In a typical apparatus using the 12 volt DC supply at terminals **14,15** pulses of the order of 22 amps at 300 volts may be produced in line **47**.

As previously mentioned relay RL1 is provided in the circuit to provide a delay in the connection of capacitor C2 to the common negative line **17**. This delay, although very short, is sufficient to enable transistors Q3, Q4 to start oscillating to cause transformer TR1 to build up a charge in dumping capacitor C5 before the first triggering signal is applied to thyristor T1 to cause discharge of the capacitor.

The circuit includes a second stage transformer TR2. This is step-up transformer comprising a primary coil **48** and a secondary coil **49** wound about a common core **51** and it produces pulses of very high voltage in the secondary coil **49** which pulses are applied between anode **12** and cathode **13**. As shown in FIG. **1**, the secondary coil **49** is connected not only between the anode and the cathode but also back to the negative side of primary coil **48**. The second stage transformer is built into the anode of the electrolytic cell **11**. Its physical construction and the manner in which its electrical connections are made will be explained in detail below.

In a typical apparatus the output from the first stage transformer TR1 would be 300 volt pulses of the order of 22 amps at 10,000 pulses per second at a duty cycle of slightly les than 0.1. This can be achieved from a uniform 12 volt and 40 amps DC supply applied between terminals **14,15** using the following circuit components:

R1 2.7 K ohms ½ watt 2% resistor
R2 220 ohms ½ watt 2% resistor
R3 100 ohms ½ watt 2% resistor
R4 22 K ohms ½ watt 2% resistor
R5 100 ohms ½ watt 2% resistor
R6 200 ohms ½ watt 2% resistor
R7 1 K ohms ½ watt 2% resistor
R8 10 M ohms 1 watt 5% resistor
R9 100 ohms 5 watt 10% resistor
R10 5.6 ohms 1 watt 5% resistor
C1 2200 MF 16V electrolytic capacitor
C2 0.10 MF 100V 10% capacitor
C3 2.2 MF 100V 10% capacitor
C4 1 MF 100V 10% capacitor
C5 1 MF 1000V Ducon paper capacitor 5 S10A
C6 0.022 MF 160V capacitor
Q1 - 2N 2647 PN unijunction transistor
Q2 2N 3055 NPN silicon power transistor
Q3 2N 3055 NPN silicon power transistor
Q4 2N 3055 NPN silicon power transistor
T1 BTW 30 800RM fast turn-off thyristor
D1 A 14 P diode
D2 A 14 P diode
RL1 PW5LS hermetically sealed relay
PS1 P658A-10051 pressure switch
TR1 Half-cup transformer cores 36/22-341
Coil former 4322-021-30390 wound to provide a turns ratio between secondary and primary of 18:1
Secondary coil **32** = 380 turns

Primary coil **34** = 9 turns
Primary coil **36** = 9 turns
Primary coil **35** = 4 turns

Transistors Q2, Q3 and Q4 each need to be mounted on a heat sink and a suitable heat sink for this purpose is 35D 3CB. The other circuit components may be installed in a steel container and the heat sink mounted transistors fitted to an exterior surface of the steel container. Alternatively it would be possible to mount at least transistor Q2 within the box if an appropriate heat sink with extended surface area is provided within the box.

The physical construction of electrolytic cell **11** and the second stage transformer TR2 is illustrated in FIGS. **2** to **7**. The cell comprises an outer casing **71** having a tubular peripheral wall **72** and top and bottom closures **73, 74**. Botton closure **74** is comprised of a domed cover **75** and an electrically insulating disc **76** which are held to the bottom of peripheral wall **72** by circumferentially spaced clamping studs **77**. Top closure **73** is comprised of a pair of top plates **78,79** disposed face-to-face and held by circumferentially spaced clamping studs **81** screwed into tapped holes in the upper end of peripheral wall **72**.

The anode **12** of the cell is of generally tubular formation. It is disposed vertically within the outer casing and is clamped between upper and lower insulators **82. 83**. Upper insulator **82** has a central boss portion **84** and an annular peripheral flange portion **85**, the outer rim of which is clamped between upper closure plate **79** and the upper end of peripheral wall **72**. Lower insulator **83** has a central boss portion **86**, an annular flange portion **87** surrounding the boss portion and an outer tubular portion **88** standing up from the outer margin of flange portion **87**. Insulators **82,83** are moulded from an electrically insulating material which is also alkali resistant. Polytetrafluoroethylene is one suitable material.

When held together by the upper and lower closures, insulators **82,83** form an enclosure within which anode **12** and the second stage transformers TR2 are disposed. Anode **12** is of generally tubular formation and it is simply clamped between insulators **82, 83** with its cylindrical inner periphery located on the boss portions **84, 86** of those insulators. It forms a transformer chamber which is closed by the boss portions of the two insulators and which is filled with a suitable transformer oil. An O-ring seal **90** is fitted between insulator boss **86** and the anode to prevent loss of oil from the transformer chamber.

The transformer core **51** is formed as a laminated mild steel bar of approximately $\frac{3}{4}$ inch square section. It extends vertically between the insulator boss portions **84,86** and its ends are located within recesses in those boss portions. The secondary transformer winding **49** is wound directly onto core **59** whereas the primary winding **48** is wound on a tubular former **89** so as to be spaced outwardly from the secondary winding within the oil filled transformer chamber.

The cathode **13** is in the form of a logitudinally slotted tube which is a close fit within the outer tubular portion **88** of insulator **83**. It has eight equally spaced longitudinal slots **91**, so that it is essentially comprised of eight cathode strips **92** disposed between the slots and connected together at top and bottom only.

Both the anode and cathode are made of solid nickel. The outer periphery of the anode is machined to form eight circumferentially spaced flutes **93** which have arcuate roots meeting at sharp crests or ridges **94** defined between the flutes. The eight anode crests **94** are radially aligned centrally of the cathode strips **92**, and the perimeter of the anode measured along its external surface is equal to the combined widths of the cathode strips measured at the internal surfaces of these strips, so that over the major part of their lengths the anode and cathode have equal effective areas. This equalisation of areas generally has not been available in prior art cylindrical anode/cathode arrangements.

The annular space **95** between the anode and cathode serves as the electrolyte solution chamber. This chamber is divided by a tubular membrane **96** made of nickel film of no more than 0.015 inch thickness perforated by holes of no more than 0.004 inch diameter of 5000 perforations per square inch. This perforated membrane serves as a barrier against mixing of hydrogen and oxygen generated at the cathode and anode respectively while permitting the electrolytic flow of current between the electrodes. Its ends fit into annular slots in the peripheral flanges of upper and lower insulators **82,83** whereby it is electrically isolated from all other components of the cell. This barrier may alternatively be formed by a tightly stretched web of nylon mesh material of sufficiently small mesh size, i.e. such that the mesh openings will not pass bubbles of greater than 0.004 inch diameter. The mesh material may be stretched between end rings of a plastic holder fitted between the annular slots in insulators **82,83**.

Initially chamber **95** is filled approximately 75% full with an electrolyte solution of 25% potassium hydroxide in distilled water. Thereafter, as the reaction progresses, the water is depleted and is made up with fresh water admitted into the outer section of chamber **95** via an inlet nozzle **97** formed in upper closure plate **78**. The electrolyte solution passes from the outer to the inner section of chamber **95** via the holes in membrane **96**. It will be noted however, that membrane **96** is perforated only below the level of the electrolyte solution so that there may be no mixing of hydrogen and oxygen within the cell. The holes, while large enough to allow passage of electrolyte solution therethrough are small enough to prevent passage of bubbles of hydrogen and oxygen normally occurring in the reaction. In the case where the gas barrier is formed by nylon mesh the upper ring of the holder would be formed to provide a solid barrier above the level of the electrolyte solution.

Nozzle **97** has a flow passage **98** extending to an electrolyte inlet valve **99** controlled by a float **101** in chamber **95**. Valve **99** comprises a bushing **102** mounted within an opening extending downwardly through upper closure plate **78** and the peripheral flange **85** of upper insulator **82** and providing a valve seat which cooperates with valve needle **103**. Needle **103** is lightly biased upwardly by a spring **104** within valve bushing **102**. However, the pressure of electrolyte solution within nozzle **97** is sufficient to push the needle downwardly against this spring to allow admission of electrolyte solution to chamber **95** until float **101** lifts the needle hard against the valve seat. The float slides vertically on a pair of star-section slide rods **106** extending between the upper and lower insulators **82** and **83** and also formed of polytetrafluoroethylene. These rods extend through appropriate holes **107** through the float.

The depth of float **101** is chosen such that the electrolyte solution fills only approximately 75% of the chamber **95**, leaving the upper part of the chamber as a gas space which can accommodate expansion of the generated gas due to heating within the cell.

As electrolysis of the electrolyte solution within chamber **95** proceeds, hydrogen gas is produced at the cathode, and oxygen gas is produced at the anode. These gases bubble upwardly into the upper part of chamber **95** where they remain separated in the inner and outer compartments defined by membrane **96**, and it should be noted that the electrolyte solution enters that part of the chamber which is filled with oxygen rather than hydrogen so there is no chance of leakage of hydrogen back throgh electrolyte inlet nozzle **97**.

The abutting faces of upper closure plates **78,79** have matching annular grooves forming within the upper closure inner and outer gas collection passages **108,109**. Outer passage **108** is circular, and it communicates with the hydrogen compartment of chamber **95** via eight ports **111** extending downwardly through top closure plate **79** and the peripheral flange of upper insulator **82** adjacent the cathode strips **92**. Hydrogen gas flows upwardly through ports **111** into passage **108** and thence upwardly through a one-way valve **112** (FIG. 7) into a reservoir **113** provided by a plastic housing **114** bolted to top closure plate **79** by a centre stud **115** and sealed by a gasket **116**. The lower part of housing **114** is charged with water **117**, and the hydrogen passes inwardly into reservoir **113** via a tube **118**. Valve **112** comprises a bushing **119** providing a valve seat for valve stem **121** which is biased downwardly by a spring **122** and also by the weight of water acting on it.

Hydrogen is withdrawn from reservoir **113** via a crooked tube **123** which connects with an outlet passage **124** in top closure plate **78**. Outlet passage **124** terminates in a hydrogen delivery nozzle **125** which may deliver the hydrogen either to storage or directly to the point of consumption.

Oxygen is withdrawn from chamber **95** via the inner annular passage **109** in the top closure. Passage **109** is not circular but has a scalloped configuration to extend around the electrolyte inlet. Oxygen enters it through seven ports **131** extended through top closure plate **79** and the annular flange portion of upper insulator **82**. The oxygen flows upwardly from passage **109** through a one-way valve **132** and into a reservoir provided by a plastic housing **134**. The arrangement is similar to that for withdrawal of hydrogen and will not be described in great detail. Suffice to say that the bottom of the chamber is charged with water and the oxygen is withdrawn through a crooked tube **135** and an outlet passage **136** in top closure plate **78** terminating in an oxygen delivery nozzle **137**.

The pressure sensing tube **20** of control switch **19** is connected directly to the upper part of chamber **95** via passage **138** in top closure plate **79** and upper insulator **82** to sense the hydrogen pressure within the upper part of this chamber. If this pressure rises above a predetermined level switch **19** operates to disconnect capacitor C2 from the common negative line **17**. This removes the negative signal from capacitor C2 which is necessary to maintain continuous operation of the pulse generating circuitry for generating the triggering pulses on thyristor T1 and these triggering pulses therefore cease. The transformer TR1 continues to remain in operation to charge dumping capacitor C5, but because thyristor T1 cannot be triggered, dumping capacitor C5 will simply remain charged until the hydrogen pressure in chamber **95** falls below the predetermined level and triggering pulses are applied once more to thyristor T1. Pressure switch **19** thus controls the rate of gas production according to the rate at which it is withdrawn. It is thus possible for example, to feed the hydrogen and oxygen gases directly to an internal combustion engine without intermediate storage, and the apparatus will produce the gases according to demand. The stiffness of the control springs for gas escape valves **112,132** must of course be chosen to allow escape of the hydrogen and oxygen in the proportions in which they are produced by electrolysis, i.e. in the ratios 2:1 by volume.

Reservoirs **113,133** are provided as a safety precaution. If a sudden back-pressure were developed in the delivery pipes this could only shatter the plastic housings **114,134** and could not be transmitted back into the electrolytic cell. Switch **19** would then operate to stop further generation of gases within the cell.

The electrical connections of secondary transformer TR2 are shown in FIG. 3. The two ends of the primary transformer coil **48** are connected by wires **156,157** to conductors **158,159** which extend upwardly through the central boss portion of upper insulator **83**. The upper ends of conductors **158,159** project upwardly as pins within a socket **61** formed in the top of upper insulator **83**. The top of socket **161** is closed by a cover **162** which is held by a centre stud **163** and has a passage **164** through which wires from the external circuit may be extended and connected to conductors **158,159** by any suitable connector (not shown) located within socket **161**.

The ends of secondary coil **49** are connected between the anode and the cathode and an additional connection is made to the conductor **158** connected to the negative side of the primary coil. Specifically, one end of coil **49** is connected to the anode by a wire **141**, this connection being entirely within the anode. The other end of coil **49** is connected to the cathode via a wire **142** which extends downwardly through a hole in the bottom insulator **83** and then horizontally to leave casing **71** between bottom insulating disc **76** and insulator **83**. The upper face of disc **76** and the lower face of insulator **83** are grooved to receive and clamp onto wire **142**. Outside the casing, wire **142** is connected to a cathode terminal bolt **143**. Terminal bolt **143** has a stem **144** extending through an opening in the cathode and an insulating bush **144** fitted in an aligned opening in the casing wall **72**. The head **146** of the thermal bolt is drawn against the inner periphery of the cathode by tightening of a clamping nut **147**, and the end of wire **142** has an eye which is clamped between nut **147** and a washer **148** by tightening a terminal end nut **149**. A washer **151** is provided between nut **147** and bush **144**, and sealing O-rings **152,153** are provided between bolt head **146** and the cathode and between bush **144** and casing wall **72** to prevent escape of electrolyte solution. The terminal connection is covered by a housing **154** held in place by fixing screws **155**.

The additional electrical connection between coil **49** and conductor **158** is made by a wire **150** connected between the wire **142** and the wire **156**.

Assuming an input to secondary transformer TR2 of 22 amps at 300 volts and a coil ratio of 100:1 the output voltage applied between the anode and cathode would then be 30,000 volts at a pulse rate of 10,000 pulses per second, with a current flow of 220 milliamps.

This output produces a discharge between the anode and the electrolyte which results in the production of short wave length electromagnetic radiation and also a pulsating current within the electrolyte. Within the space between the anode and the cathode there is a pulsating magnetic field due to the secondary coil of the

transformer and this assists in the generation of the short wave length radiation. Specifically, radiation of wave length 10^{-10} meters to 10^{-13} meters is produced and this radiation produces radiolysis of the electrolyte while the electrolytic flow of current provides for release of the decomposition products of hydrolysis.

The configuration of the anode and the cathode and the arrangement of the secondary transformer within the central anode is of great importance. The anode and cathode, being constructed of magnetic material, are acted on by the magnetic field of the transformer TR2 to become, during the period of energization of that transformer, strong conductors of magnetic flux to create a strong magnetic field in the inter-electrode space between the anode and the cathode. Moreover, the fluted external periphery of the anode and the strip formation of the cathode, shapes this magnetic field such that field lines from the anode are caused to intersect field lines from the cathode as indicated by the respective sets of dotted lines A and B drawn in one portion of the electrolyte chamber in FIG. **4**. The high speed photons of the short wave electro-magnetic radiation will tend to follow these field lines. Moreover, the hydrogen and oxygen ions in the electrolyte will be concentrated along these field lines and will, in fact, move along them. Thus, the statistical possibility of collision between the high speed photons of the short wave length radiation and the ions in the electrolyte is very much improved by the generation of this particular magnetic field. Moreover, there is a greatly increased possibility of collision between the ions themselves since these will tend to collide at the intersections of the field lines A and B with subsequent improved liberation of hydrogen and oxygen gases. Thus, the configuration of the anode and cathode which produces intersecting magnetic field lines is extremely important in improving the efficiency of the radiolysis process and also in liberating the decomposition products of hydrogen and oxygen. This particular configuration also causes the surface area of the anode to be extended and permits an arrangement in which the anode and cathode have equal surface areas which is most desirable in order to minimize electrical losses. It is also desirable that the anode and cathode surfaces at which gas is produced be roughened, for example, by sand blasting or knurling. This promotes separation of the gas bubbles from the electrode surfaces and avoids the possibility of overvoltages. The anode and cathode may both be made of nickel but this is not essential, and they might alternatively be formed of nickel plated steel, or they could be made of platinum or be platinum plated.

The heat generated by transformer TR2 is conducted via the anode to the electrolyte solution and also increases the mobility of the ions within the electrolyte solution and thus also contributes to the progress of electrolysis and radiolysis. If desired for dissipation of heat there may be provided cooling fins such as fins **150**. The location of the transformer within the anode also enables the connections of the second coil **49** to the anode and cathode to be made of short, well protected conductors.

Dumping capacitor C5 will determine a ratio of charging time to discharge time which will be largely independent of the pulse rate. The pulse rate determined by the unijunction transistor Q1 must be chosen so that the discharge time is not so long as to produce overheating of the transformer coils and more particularly the secondary coil **49** of transformer TR2. With the saw tooth wave input and sharply spiked output pulses of the preferred oscillator circuit the duty cycle of the pulses produced at a frequency of 10,000 pulses per second was about 0.006. This pulse form helps to minimise overheating problems in the components of the oscillator circuit at the high pulse rates involved. A duty cycle of up to about 0.1, as may result from a square wave input, would be feasible but at a pulse rate of 10,000 pulses per second, some of the components of the oscillator circuit would then be required to withstand unusually high heat inputs. A duty cycle of about 0.005 would be a minimum which could be obtained with the illustrated type of oscillator circuitry.

The illustrated electrolytic cell **11** is designed to produce hydrogen and oxygen at a rate sufficient for operation of internal combustion engines and other uses known in the art. Typically, it may have a diameter of about 8 inches and a height of about 8 inches, so that it will be seen to be extremely compact.

A modified apparatus constructed in accordance with the invention is illustrated in FIGS. **8** to **10**. this apparatus is largely the same as that already described with reference to FIGS. **1** to **7** and common components have been identified by the same reference numerals. In this case however the output of the secondary transformer TR2 is not applied directly between the anode **12** and the cathode **13**, but is instead applied to radiation generators denoted generally as **201** mounted in the lower part of the electrolytic cell and in addition a constant DC potential, for example 12 volts, is applied between the anode and cathode as indicated in FIG. **10**. Modifications made to the bottom part of the electrolytic cell involve a thickening of the central boss portion of lower insulator **83**. The thickened boss portion is indicated at **86A**. The insulating disc **76** of the previous apparatus is eliminated and the lower domed cover as modified and is indicated in FIGS. **8** and **9** as **75A**. The modification of cover **75A** includes the provision of a peripheral upstanding sill **202** and the cover is fastened to the bottom of outer casing **71** by long clamping studs **77A** extending through vertical holes in the sill **202**.

Radiation generators **201** are disposed directly beneath the annular electrolyte chamber at diametrically opposite sides of the chamber. They are of identical construction, each comprising a cylindrical ceramic holder **203** which has a central bore to receive tungsten rod electrodes **204,205**. These electrodes are disposed with a gap between them and the holder has an upper notch **210** which exposes the electrode gap. The outer end of electrode **205** has a domed head **206** and a spring **207** is compressed between head **206** and the outer end of a hollow stud **208** which screws into a tapped opening extended radially through sill **202** of cover **75A**. The inner end of electrode **205** is sharply pointed and the pointed tip is spaced apart from the adjacent flat end of electrode **204** by a gap of at least 0.006 inches and preferably about 0.016 inches. Electrode **204** is shaped as a simple cylindrical tungsten rod fitted with a brass inner end cap **209** which has a tongue **211** engaging a slot **212** in the end of a brass rod **213** mounted in a hole bored diametrically through the thickened boss **86A** of insulator **83**.

The output of secondary transformer coil **49** is applied to brass rod **213** via the transformer core **51**, a spring **214** and a stud **215** which extends downwardly into boss **86A** and into a tapped hole in the centre of rod **213**. As indicated in FIG. **8** wire **141** is in this case inserted into the core **51** rather than being connected to

the anode as in the previous apparatus and the wire **142** of the previous apparatus is eliminated so there is no connection between the secondary coil and the cathode. Instead a constant **12** volt DC supply is connected directly between the anode and cathode by insulated wires **216, 217**. Wire **216** is connected to terminal bolt **143** in place of the wire **142** and wire **217** is extended through a nylon bush **218** in sill **202** of the bottom cover **75A** and then upwardly through a hole **219** in insulator **83** and into the lower end of the cathode.

Application of the 30,000 volt pulses to brass rod **213** results in one of the radiation generators **201** acting to generate high intensity gamma radiation which irradiates the electrolyte between the anode and the cathode. The high voltage energy will discharge through that radiation generator which presents the least electrical resistance so that only one generator will operate at any one time. If however one of the generators should fail, the other would start to operate. The rapid pulses of potential difference applied between the electrodes, **204, 205** results in gamma ray radiation because of the impossibility of establishing a current flow between the electrodes sufficient to transmit the high speed electrons involved. The pointed end of electrode **205** increases the resistance to the passage of electrons and therefore enhances the production of gamma radiation of wave length shorter than 10^{-10} meters and generally in the range 10^{-10} meters to 10^{-13} meters.

The strong magnetic field induced by the secondary coil of transformer TR2 also assists in the generation of gamma radiation and in fact enables generation of relatively high intensity radiation by an open air spark discharge. Even further improvement could be achieved if the electrodes **204, 205** were encapsulated in an evacuated tube.

As in the case of the previous embodiment the intersecting magnetic field lines from the anode and cathode provide preferred paths for the high speed photons of the gamma radiation and the ions within the electrolyte will also move along these field lines so that the probability of collisions between ions and high speed photons within the electrolyte is greatly increased and there is also an increased probability of collision of ions at the intersections of the field lines. Thus there is a high rate of decomposition by radiolysis and liberation of decomposition produced by electrolysis.

FIG. **11** is a circuit diagram for a modification of the apparatus of FIGS. **8** to **10**. In this case the physical construction of the electrolytic cell as illustrated in FIGS. **8** and **9** remains unchanged but instead of applying a constant 12 volt DC potential between the anode and cathode, the anode is connected via a control device **300** to the output side of relay RL1. The output side of relay RL1 provides a constant 12 volt DC potential and control device **300** serves to modify this before it is applied to the anode. The decomposition potential for water is 1.8 volts and this is the theoretical minimum for electrolysis of water to proceed. In practice it is necessary to supply an additional voltage, termed overvoltage, and this depends on the physical characteristics of the electrolytic cell and the quantity of electrolyte. If the overvoltage is exceeded no improvement is achieved and the additional voltage is simply wasted in the generation of heat. The purpose of control device **300** is to ensure that the necessary overvoltage is supplied but additional voltage is minimized. It may also serve to prevent backflow of EMF from the electrolyte to the circuit. It may, for example, comprise a diode or a number of diodes in series to provide a step-down in voltage from the output side of relay RL1 and a consequent increase in current. It may alternatively include means for producing a pulsating DC voltage to be applied to anode **12**. Various standard switching circuits could be used for this purpose and in particular a standard multi-vibrator circuit could be used. If a pulsating current is used it is necessary to keep the pulse rate below about 10,000 pulses per minute otherwise the pulsating current induced in the electrolyte will adopt an alternating current characteristic which will retard electrolysis.

Experiments performed on small devices such as that illustrated, have indicated that, in order to produce the necessary short wave electromagnetic radiation, the electric output from transformer TR2 must be at least 10,000 volts, otherwise no appreciable gamma radiation is produced. Although increases in voltage produces increased radiation, the voltage and consequent radiation output must be matched to the physical characteristics of the cell and the amount of electrolyte used. The electric circuit already described produces about 30,000 volts and we have found that this is an optimum for the particular apparatus illustrated. It is also necessary, in order to avoid heating problems in the electrical circuit, that the pulse rate of the electric discharge be greater than 5,000 pules per minute, and preferably of the order of 10,000 pulses per minute.

It has further been found that the short wave radiation must have an intensity of at least 6 milli-Roentgen/-hour to produce significant radiolysis of water in the apparatus according to the invention. The intensity of radiation required will of course depend on the size of the installation and the amount of electrolyte irradiated but it is believed that 6 milli-Roentgen/hour must be regarded as an absolute minimum to achieve any significant result even in small apparatus. Apparatus constructed in accordance with FIGS. **8** to **10** has produced a gamma radiation output of 26 to 28 milli-Roentgen/-hour which is quite adequate to produce rapid radiolysis of the electrolyte in such apparatus.

FIGS. **12** to **26** illustrate a modified and improved apparatus in which the electrolyte is irradiated by short wave length electric radiation generated by a radiation tube located at the centre of the cell within a hollow tubular anode of the cell. The radiation tube produces a 360° spread of radiation which radiates outwardly through holes or windows in the anode to provide intense irradiation of the electrolyte. Permanent magnets are installed within the anode and within the cathode to produce a carefully shaped magnetic field within the cell. A recirculating flow of oil passes through the anode and around the radiation tube to extract heat from the cell and to prevent sparking between the radiation tube and other components of the cell.

The electrolytic cell of the apparatus illustrated in FIGS. **12** to **26** is denoted generally as **301**. It comprises an outer casing **302** having an aluminium peripheral wall **303** and top and bottom closures **304, 305**. Peripheral wall **303** incorporates cooling fins **310**. Bottom closure **305** is comprised of a non-magnetic stainless steel bottom plate **306** which is clamped to the bottom end of the peripheral casing wall **303** by means of clamping bolts **307** which fit into tapped holes in the casing wall. The interface between bottom plate **306** and casing wall **303** is sealed by an annular gasket **308**.

Top closure **304** is comprised of a non-magnetic stainless steel top plate **309** and a plastic cover **311**. Top plate

309 is fastened to the upper end of casing wall 303 by clamping bolts 313 which screw into tapped holes 314 in the casing wall and plastic cover 311 is fastened to top plate 309 by fastening screws 315 so as to cover a central opening in the top plate. The interface between top plate 309 and casing wall 303 is sealed by an annular gasket 316.

A tubular cathode assembly 317 is fitted closely within casing wall 303. The upper end of this cathode assembly engages gasket 316 and its lower end provides an abutment for the outer rim of a plastic bottom disc 318 which is held clamped to the bottom of the cathode assembly by bottom plate 306. A sealing gasket 319 is located between the bottom end of the cathode assembly and the plastic bottom disc 318.

Plastic bottom disc 318 has a central boss portion 321 which embodies socket terminals 322, 323 for the pins 324, 325 of a short wave length electromagnetic radiation tube denoted generally as 326 disposed at the centre of the cell. Radiation tube 326 comprises a partially evacuated glass walled envelope which houses a shielded filament winding 327 and an anode 328 having a tungsten insert 330 providing a flat target surface. The ends of filament winding 327 are electrically connected to terminal pins 324, 325 and the anode 328 is connected by a screw connection 329 to a metal component 331 which has a finned body and an upper stem 332 which projects into a hole in the underside of plastic cover 311. As will be described in more detail below metal member 331 serves as an electrical connector through which to supply high voltage to the anode of the radiation tube and also as a heat sink for the radiation tube.

Radiation tube 326 is surrounded by an anode assembly denoted generally as 333 which is clamped between bottom plastic disc 318 and an upper plastic disc 334 by means of lower clamping bolts 335 and upper clamping bolts 336. The anode assembly comprises a non-magnetic tubular metal anode 337 within which is force fitted a thick plastic liner sleeve 338. The stems of bolts 335 screw into tapped holes 339 in the bottom of anode 337 and their heads bear against a metal ring 341 fitted to the underside of plastic bottom disc 318. The stems of bolts 336 screw into tapped holes 342 in the upper end of anode 337 and their heads bear against a metal retaining ring 343 fitted to an upper face of plastic disc 334.

A gasket 344 is compressed between the outer rim of upper plastic disc 334 and the upper ends of anode 337 and anode liner 338 and a smaller gasket 345 is compressed between the lower plastic disc 318 and the lower ends of the anode and anode liner. A pair of O-ring seals 346 are disposed in circumferential grooves in the outer periphery of liner 338 adjacent the top and bottom ends of the cathode assembly so as to form seals ensuring the separation of the electrolyte which surrounds the anode and the oil which flows through the interior of the anode.

As is most clearly seen in FIG. 20 the outer periphery of anode 337 is machined to form eight circumferentially spaced flutes 347 which have arcuate surfaces meeting at sharp crests 348 defined between the flutes. The whole of the outer peripheral surface of the anode is knurled to produce small pyramidal projections so as to increase the effective surface area of the anode and to promote separation of gas bubbles at that surface. The anode is made of a non-magnetic material, preferably nickel plated brass.

The tubular wall of the anode is perforated by eight holes or windows 349 disposed centrally of the flutes (i.e. midway between crests 348) and midway between the ends of the anode.

Referring to FIG. 21, the outer periphery of anode liner 338 has eight blind bores 351 which register with the holes 349 in the anode when the liner is fitted into the anode. The liner can thus serve to separate the electrolyte from the oil within the anode but the wall thickness of the liner is reduced to a minimum at the anode holes so as to present minimum obstruction to the short wave length electromagnetic radiation generated by radiation tube 326 as that radiation spreads out from tube 326 and through the anode holes.

Anode liner tube 338 has an inner circumferential flange 352 located adjacent the tops of anode holes 349 and liner bores 351. This flange supports an annular plastic casing 353 which contains a stack of three annular permanent magnets 354. The magnets are firmly held in position by six rubber pads 355 which are compressed between the uppermost magnet and upper plastic disc 334. As will be described below magnets 354 produce a strong magnetic field within the cell. In order to produce the highest possible flux density, they are preferably of the cobalt samarium type.

Cathode assembly 317 comprises a cathode tube 356, the outer periphery of which is recessed to receive an outer lead sheath 357 which serves as a radiation shield. Unlike the anode, the cathode is made of a magnetic material. Preferably it is constructed of nickel plated mild steel. Its inner periphery has eight vertical dovetail slots 358 arranged at equal circumferential spacing. Seven of these slots receive plastic strips 359 which incorporate small magnet housings 361. Seven permanent magnets 360 are installed in housings 361 by insertion through openings 362 which are then sealed with epoxy resin before the strips 359 are fitted to the cathode tube. The remaining slot 358 of cathode tube 356 is fitted with a plain plastic strip 363 which does not incorporate a magnet housing.

The cathode assembly is a neat fit within the peripheral wall 303 of the outer casing 302 of the cell and it is installed such that the seven cathode magnets 360 are radially aligned with the centres of anode flutes 347. They are therefore generally aligned with seven of the anode holes 349. The exposed parts of the inner periphery of cathode tube 356 serve as cathode strips the centre-lines of which are radially aligned with the anode crests 348. As in the previous embodiments the sum of the surface widths of these strips are equal to the total of the surface widths of the anode flutes.

The electrolyte chamber 361 between the anode and the cathode is initially charged with electrolyte through a filler opening in top plate 309 which is then closed by a screw plug 370. This chamber receives make-up water from a supply pipe 362 via a water inlet passage 363 in top plate 309 and through a needle valve 364 which is controlled by a float 365. Float 365 is formed as a generally cylindrical hollow shell of non-magnetic steel which moves vertically within a plastic cage 366 fastened to the underface of top plate 309 by a fastening screw 367. The float and cage are disposed within the electrolyte chamber adjacent the cathode strip 363, which is not fitted with a cathode magnet in order to allow sufficient space to accommodate the float. The float acts on water inlet valve 364 via a stainless steel actuator arm 368 which is connected to the float through an electrically insulating plastic connector 369.

A pair of gas collection vessels denoted generally as 371 are mounted on metal top plate 309. Each of these

vessels comprises a transparent plastic side wall **372** covered by a metal lid **373**. The lid is fitted with a central clamping bolt **374** which screws into a tapped hole in cover plate **309** to clamp the lid and the side wall to the cover plate. As most clearly seen in FIGS. **17** and **18** the upper face of top plate **309** is machined so as to form a well **375** at the bottom of each gas collection vessel **371** and this well is filled with water to the level indicated at **376**. This water may be topped up from time to time as required through filler openings in lids **373** which are closed by screws **377**.

The mixture of hydrogen and oxygen gases liberated into the upper part of electrolyte chamber **361** passes upwardly into collection vessels **371** via a pair of gas valves **378**. Each gas valve comprises a lower hollow spigot member **379**, which extends upwardly through a hole in metal top plate **309** and is screw connected at **381** to the bottom end of a central valve stem member **382** having an enlarged head **383** from which an outer skirt **384** depends below the level of water in the gas collection vessel. The lower end of spigot **379** has a flange **385** so that a clamping action is produced between this flange and the bottom of valve stem **382** to clamp the valve to top plate **309** when screw connection **381** is tightened. A pair of gaskets are provided to seal against leakage of water from the gas collection vessel.

Spigot **379** and valve stem **382** are hollow and gas from the electrolyte chamber flows upwardly through them and thence downwardly and outwardly through four holes **387** in valve head **383** into the space within the valve skirt **384**. The gas must then bubble downwardly through the water in the well at the bottom of the gas collection vessel to escape into the gas collection chamber **388** in the upper part of the collection vessel.

The mixture of hydrogen and oxygen gas which accumulates in the collection chambers **388** of vessels **371** flows from these chambers through crooked tubes **389** into a pair of gas flow passages **391** extending along metal tube plate **309** to a pair of vertical gas flow ducts **392** formed in the peripheral wall **303** of the outer casing. The gas then passes from ducts **392** via spring loaded one way valves **393** to a delivery pipe **394** bolted to the side of the cell casing by bolts **395**, whence it may be piped to storage or a point of consumption.

A tube **400** is fitted to a tapping in top cover **309** which connects with the top of the electrolyte chamber. Tube **400** therefore monitors the pressure within the electrolyte chamber. Its other end is connected to a pressure switch in the electrical circuitry of the apparatus as will be explained below.

The cell has a forced flow oil circulation system whereby oil is passed into the bottom of the cell and upwardly through the interior of the anode assembly to completely surround radiation tube **326** whereafter it passes out from the top of the cell and is recirculated. The oil displaces air from the interior of the cell, which might otherwise permit sparking to occur between radiation tube **326** and other components of the cell, and it also serves to extract heat from the cell and thus prevent overheating of the radiation tube. The oil enters the bottom of a cell from an input pipe **401** through an inlet port **402** and passes upwardly through holes **403** in the central boss portion of bottom plastic plate **318**. It then flows upwardly through the interior of the anode assembly and around the radiation tube and finned metal member **331**. The upper stem portion **332** of member **331** has a transverse bore **404** connecting with a central vertical bore **405** through which the oil flows to an oil outlet passage **406** in plastic cover **311** and thence to an oil outlet pipe **407**. The oil may be re-circulated by a pressure pump through a cooling radiator and accumulator or expander unit to accommodate thermal expansion of the oil. Because of its finned construction, member **331** provides excellent heat transfer from the radiation tube to the circulating oil which can flow upwardly along the channels defined between the vertical fins. Member **31** also serves as an electrical connector whereby a high tension connection is made to the anode **328** of the radiation tube. This connection is made from a high voltage cable **408** connected via a plastic bolt **409** in plastic cover **311** to a silver plated brass conductor **411** which bears against the stem portion **332** of connector member **331** and is backed by a flexible rubber seal **412**.

The terminal **323** for the tube filament **327** is connected via a wire **413** to a positive electrical input lead **414** and the other filament terminal **322** is connected via a wire **415** directly to the outer casing of the cell whereby it is earthed. Cathode tube **356** is earthed by its engagement with the outer casing of the cell and anode **337** is electrically connected via one of the clamping studs **335** to a positive input lead **416** which enters the lower part of the outer casing through a rubber seal **417**.

Before describing the electrical circuitry for the apparatus illustrated in FIGS. **12** to **26**, the general operation of the apparatus will be described. To start operation of the cell electrolyte chamber **361** is charged with a 25% aqueous solution of potassium hydroxide.

A constant DC potential of 4.2 volts is applied between anode **337** and cathode **356**. The filament **327** is supplied with a regulated positive voltage of 2.65 volts and a very high pulsating DC voltage is applied between the filament and the anode of the radiation tube. Typically the voltage between the filament and the anode will be 40 KV with a superimposed ripple voltage of 2–4 KV. Under these conditions the electron bombardment of the anode produces a 360° band of radiation indicated by the dotted lines **421** in FIG. **25**. As indicated by these dotted lines the band of radiation fans downwardly from the horizontal plane of the flat target surface of the radiation tube anode through a scattering angle of approximately 15°. The radiation comprises high energy photons of wave length less than 10^{-10} meters. Tests indicate that the radiation intensity from the tube is of the order of 30,000 Roentgen/hour. This high flux of photons releases large numbers of neutrons within the tungsten target of the radiation tube and the tube therefore also acts as a pulsed source of neutrons which radiate with the high energy photons in the radiation beam. The radiation beam extends outwardly through the holes **349** in anode **337** into the electrolyte chamber and because of reflections from the cathode a band of the electrolyte within the electrolyte chamber is intensely irradiated.

The anode magnets **354** and cathode magnets **360** produce an intense magnetic field the shape of which is indicated by the dashed lines **422**, **423**. The lines **422** indicate closed loop magnetic field lines which extend downwardly from anode magnets **354** to intersect the radiation beam at approximately 90° then curve inwardly and upwardly to extend vertically through the cathode of radiation tube **326** and through metal member **331** whereafter they curve outwardly and downwardly to the upper ends of the anode magnets. In the

region between the radiation tube filament and anode the magnetic field serves to accelerate the electrons which bombard the radiation tube anode and so contributes to the energy of the radiation produced by the tube.

Lines **423** show outer field loops which extend from the bottom of anode magnets **354** and across to cathode magnets **360** whence they pass upwardly through the cathode and back in a closed loop to the upper end of the anode magnets. Cathode magnets **360** serve to draw these magnetic field lines so that they pass outwardly through the electrolyte chamber in the region where the electrolyte is subjected to intense irradiation. The magnetic field in this region of the electrolyte chamber therefore provides preferred paths for the radiation photons which then tend to pass through the electrolyte in radial directions. The intersection of the magnetic field with the radiation photons within the electrolyte produces a "spin flip" effect in the protons released within the electrolyte which increases their energy level.

The magnetic field lines within the electrolyte chamber provide preferred paths for the energetic photons of the electromagnetic radiation and the ions within the electrolyte will also move along these field lines so that the probability of collisions between the ions and energetic photons within the electrolyte is greatly increased. Thus there is a high rate of decomposition by radiolysis and a liberation of decomposition products produced by electrolysis. The decomposition products are in the form of highly ionised hydrogen and oxygen gases. Moreover, because of nuclear capture of neutrons associated with the radiation beam the ionised hydrogen gas which is produced will comprise a much higher proportion of deuterons than in naturally occurring hydrogen. Thus a mixture of highly ionised oxygen and hydrogen gases including a significantly high proportion of deuterons accumulates in the upper part of the electrolyte chamber and passes upwardly into collection vessels **371** whence it flows through crooked tubes **389** and transfer passes **391** and ducts **392** to outlet pipe **394**.

In order to achieve the above results the magnetic field should have a flux density greater than 500 Grauss within the electrolyte, and preferably of the order of 1800 Grauss. The electrical circuit for the apparatus shown in FIGS. **12** to **25** is illustrated in FIG. **26**. As shown in that Figure the circuitry is energised by a 12 volt battery **501**. A simple on/off master control switch **502** provides positive voltage to a radiation tube filament voltage regulator denoted generally as **503** and to a timer circuit denoted generally as **504**. The filament voltage regulator provides controlled positive voltage to the filament **327** of radiation tube **326**. Timer **504** energises a master control relay **505** which is connected to the common negative through a pressure control switch **506**. Pressure control switch **506** provides negative voltage to an indicator lamp **507** the other side of which receives positive voltage from battery **501**. **508** supplies a controlled positive voltage to an inverter circuit denoted generally as **511** which in turn supplies a square wave form of AC voltage to a voltage multiplier circuit produces the high voltage DC potential difference which is applied to radiation tube **326**. This voltage is approximately 40 KV DC with a superimposed sharply spiked ripple of 2-4 KV.

The positive voltage for anode **337** of cell **301** is provided through a switching power supply circuit denoted generally as **513** which is energised by the high power relay **509**.

The pressure sensing tube **400** from the electrolyte chamber of cell **301** is indicated in the circuit diagram by a broken line and is connected to pressure control switch **506**.

The major components of the electrical circuit will now be described sequentially in detail.

Filament Voltage Regulator (503)

When positive voltage is supplied through the master control switch **502** and energises the relay **RL1** it will supply current to voltage regulator **IC1** through the fixed contact of the relay. The same contact will supply current to timer **504** through the normally closed contact of relay **RL2**. Capacitor **C1** is connected between the negative and positive supply lines and provides a delay of 1.5 seconds when relay **RL1** turns off to ensure that the high voltage supplied to radiation tube **326** is turned off before the regulated filament voltage is turned off before the regulated filament voltage is turned off. The output voltage of regulator **IC1** is controlled by the set level of resistance of a resistor network **R1**, **R2** and **RV1** (variable resistor). Capacitor **C2** acts to stabilise the circuit against input voltage supply transients. Resistor **R3** isolates capacitor **C3** from the output of the regulator **IC1** and balances the input divider. Capacitor **C3** is used to roll off the error amplifier in regulator **IC1** and to provide frequency compensation. If the filament breaks transistor **Q1** is turned on by current provided through resistor **R4** and **R5** and the relay **RL2** to stop supply current to timer **504**. The values of resistor **R4** and **R5** are selected to prevent sufficient current supply to energise relay **RL2** during normal operation of the radiation tube. When transistor **Q1** and relay **RL2** are activated a resistor **R6** drops the **12** volt supply to a level where it does not overload the **6** volt relay **RL2**.

Timer (504)

Time delay circuit **504** provides current to the master control relay **505**. When power is supplied through the normally closed contact point of relay **RL2**, the capacitor **C4** is charged through resistor **R7** until the voltage across capacitor **C4** reaches the trigger voltage of unijunction transistor **Q2**. The time delay is controlled by the ratio of capacitor **C4** and resistor **R7** and provides a delay of 2 to 3 seconds. When unijunction transistor **Q2** turns on and discharges capacitor **C4**, through resistor **R8**, it provides a voltage pulse which is applied to the gate of **SCR1** and will turn **SCR1** on. The resistor **R9** will control the pulsed current supplied to the gate of **SCR1**. Master control relay **RL4** acts as a load for the device, and thus, when **SCR1** turns on, the master control relay **RL3** latches over and provides, through its contact point, positive voltage to drive the Inverter Voltage Regulator **508** and energises high power relay **RL4**. The master control relay **505** is connected to the negative supply through the normally closed contact point of pressure controlled switch **506**. When the gas pressure in cell **301** rises above a certain level, the pressure controlled switch **506** changes over to provide negative voltage to the indicator lamp **507** and to stop the function of master control relay **509** until the gas pressure reduces to normal. During this period the complete circuit is inactive except for the tube filament supply.

Inverter Voltage Regulator (508)

The series pass voltage regulator **508** senses changes in the output voltage by the differential amplifier transistors Q3 and Q4 and its associated circuitry resistors R10, R11, R12 and R13 and zener diode ZD1. Resistor R13 provides for a large current to flow through ZD1 and since it is much larger than the current flowing through resistors R10 and R11 makes the reference voltage generated by zener diode ZD1 at point A virtually independent of changes in voltage.

If there is any change to voltage, this causes a complementary change in the base current to transistor Q5. This is achieved by using transistor Q4 to control the current through transistor Q5. Transistor Q5 is used as a common emitter driver and regulates the base current to the series pass transistor Q6. Zener diode ZD2 provides the reference voltage for this arrangement of transistors Q5 and Q6 and keeps the voltage at the base of Q6 constant and hence only varying the control current through transistor Q5. Resistors R14 and R15 provide correct biasing of transistors Q5 and Q6.

Capacitor C5 maintains low output impedance at high frequencies where the gain transistors Q3 and Q4 is low. The value of resistor R12 is selected to draw sufficient operating current through transistors Q3 and Q4, such that transistor Q4 is in its active region for large possible variations in voltage. The Inverter Voltage Regulator receives 12 volt positive supply through master control relay **505** and provides a regulated voltage of approximately 8 volts to the Inverter **511**.

Inverter (511)

The inverter is a DC to AC converter using a transistor oscillator. The transistors Q7 and Q2 are high speed switching devices and operate to provide an alternating high frequency current, frequency 3KHz to 25KHz, in primary coils T1 and T2. The starting signal applied to the centre tap of coil T3 is controlled by the resistor network provided by resistors R15 and R16 such that its magnitude will provide sufficient base drive to the transistors Q7 and Q3 to enable them to trigger alternatively. Transistors Q7 and Q8 will provide opposite flow of current in the coils T1 and T2 which alternates the flux in the ferrite core FC1 from positive to negative. The secondary coil generates a high voltage output by means of the large turns ratio between primary and secondary coils. The capacitor C6 will act as a filter and prevent input voltage transients.

Voltage Multiplier (512)

The input voltage to the voltage multiplier is the high voltage AC waveform from the inverter secondary winding T4. Typically this will be about 18KV. The operation of the circuit can be described by considering alternative positive and negative cycles of the high voltage AC waveform. On the first positive half cycle the diodes D1 and D2 are forward biased and charge capacitor C7 to the peak value of the positive cycle. On the negative cycle following diodes D1 and D2 are reversed biased and diodes D3 and D4 are forward biased. Capacitor C7 discharges through diodes D3 and D4 to charge capacitor C8. At the next positive half cycle capacitor C7 is charged again by diodes D1 and D2 while the voltage across capacitor C8 forward biases diodes D5 and D6 which enables capacitor C8 to charge capacitor C9.

This process is repeated on the next negative half cycle charging capacitor C10 and in a similar fashion capacitor C11 is charged on the following positive half cycle. At this point ($2\frac{2}{3}$ complete cycles since the initiation of the sequence) capacitors C7, C9 and C11 are each charged to the full zero to positive peak voltage of the secondary winding T4 and since the capacitors are in series with each other the voltage with respect to earth at the output terminal of the voltage multiplier is three times the zero to peak value.

This process continues for as long as the input voltage is present and because of the rectifying action of diodes D1 - D6.

The output as well as being multiplied to three times the input voltage is also rectified from an AC voltage to a DC voltage. However, the regulation of this type of circuit is such that the DC waveform has a fairly large superimposed AC ripple voltage. This is typically 2 - 4KV in a total output voltage of 46KV.

Switching Power Supply (513)

The switching power supply circuit operates by means of the pass transistor Q9 and its associated driver transistor Q10 being rapidly switched on and off by the voltage regulator IC2. A five volt output can be obtained by this method because the transistors are switched on until the output voltage is just above 5 volts. They are then switched off until the voltage drops to just below 5 volts. This process continues and thus the output voltage is a DC voltage with a slight superimposed AC ripple.

Resistors R17 and R18 feed back a fraction of the output voltage to IC2 and this is compared to an internal reference voltage in IC2. The result of this comparison controls the switching of transistors Q9 and Q10. Resistor R20 improves output regulation versus input voltage changes by feeding a small compensating voltage proportional to the input voltage to IC2.

Capacitors C12 and C14 provide AC feedback to IC2 which causes the output voltage to be independent of the output ripple voltage across the capacitor C15. Capacitor C13 is used to roll off the error amplifier in the internal circuitry of voltage regulator IC2 and to provide frequency compensation. Capacitor C16 improves the transient response of the power supply circuitry **513**. Resistor R21 establishes the desired level of base drive to transistor Q10 and determines the hysteresis voltage across resistor R19.

Transistor Q11 provides current limiting action by sensing the voltage drop across resistor R24. When the output current exceeds a predetermined limit transistor Q11 turns on cutting off the drive current to IC2. Resistor R19 provides the necessary bias for transistor Q11 as do resistors R22 and R23 for transistors Q9 and Q10 respectively.

When transistors Q9 and Q10 turn on, the current through inductor L1 increases in an exponential fashion. There is also a corresponding rise in voltage which is sensed by resistors R18 and R17. When these resistors sense that the voltage has reached its upper level transistors Q9 and Q10 are turned off. As the current was increasing through inductor L1, that inductor was storing energy in its associated magnetic field. When transistors Q9 and Q10 turn off the combination D11, L1 and C15 act as the only power source with diode D11 being forward biased which provides for a continuous current path for the current through inductor L1.

Transistors Q9 and Q10 and diode D11 must be fast switching devices to ensure efficient operation of the regulator as it is during switching that most of the losses occur. The combination of inductor L1 and capacitor C15 provides a filter to minimise the output AC ripple on the DC output Eo.

A complete components list for the illustrated circuit is as follows:

R_1	10K OHM	¼ WATT	C_1	1000 μF ELECTROLYTIC	
R_2	3K OHM	¼ WATT	C_2	1 μF TANTALOM	
R_3	5.6K OHM	½ WATT	C_3	2000 ρF POLYESTER	
R_4	0.68 OHM	5 WATT	C_4	10 μF TANTALUM	
R_5	12K OHM	½ WATT	C_5	2500 μF ELECTROLYTIC	
R_6	68 OHM	½ WATT	C_6	.002 μF POLYCARBONATE	
R_7	1 MEGOHM	½ WATT	C_7	1800 ρF 30KVWDC	
R_8	220 OHM	½ WATT	C_8	1800 ρF 30KVWDC	
R_9	470 OHM	½ WATT	C_9	1800 ρF 30KVWDC	
R_{10}	2.2K OHM	½ WATT	C_{10}	1800 ρF 30KVWDC	
R_{11}	2.7K OHM	½ WATT	C_{11}	1800 ρF 30KVWDC	
R_{12}	680 OHM	½ WATT	C_{12}	.01 μF POLYESTER	
R_{13}	2K OHM	½ WATT	C_{13}	220 ρF DISC CERAMIC	
R_{14}	33 OHM	5 WATT	C_{14}	.02 μF POLYESTER	
R_{15}	100 OHM	½ WATT	C_{15}	2500 μF ELECTROLYTIC	
R_{15A}	18 OHM	5 WATT	C_{16}	420 μF ELECTROLYTIC	
R_{16}	1.5 OHM	5 WATT			
R_{17}	5.5K OHM	¼ WATT			
R_{18}	3.1K OHM	½ WATT	Q_1	2N3568	
R_{19}	8 OHM	2 WATT	Q_2	2N2647	
R_{20}	1.2 MEG	¼ WATT	Q_3	2N1304	
R_{21}	5 OHM	2 WATT	Q_4	2N1304	
R_{22}	40 OHM	2 WATT	Q_5	2N3055	
R_{23}	15 OHM	5 WATT	Q_6	2N6274	
R_{24}	.006 OHM		Q_7	2N3773	
			Q_8	2N3773	
R_{V1}	10K OHM TRIMPOT		Q_9	2N6274	
			Q_{10}	2N6191	
R_{L1}	12V DC RELAY		IC_1	MPC 1000 VOLT REGULATOR	
R_{L2}	6V DC RELAY		IC_2	LM 305	
R_{L3}	12V DC RELAY				
R_{L4}	12V DC RELAY		SCR_1	G.E. C106D	
D_1	ED1 7639 35KV		FC_1	FERRITE "E" CORE	
D_2	ED1 7639 35KV				
D_3	ED1 7639 35KV		L_1	5 μH	
D_4	ED1 7639 35KV				
D_5	ED1 7639 35KV		PS_1	PRESSURE ACTIVATED MICROSWITCH 5A DC AT 28 VOLTS	
D_6	ED1 7639 35KV				
D_7	ED1 7639 35KV				
			Z_{D1}	B27 96 C6V2 105W	
D_8	ED1 7639 35KV				
			Z_{D2}	6.2V 10 WATT	
D_9	ED1 7639 35KV				
D_{10}	ED1 7639 35KV				
D_{11}	75 AMP IAV.				

Apparatus of the type illustrated in FIGS. 12 to 25 has been constructed and tested and has been found to operate most efficiently. The results of a typical test conducted over a period of 60 minutes and 39 seconds are tabulated in table A. As shown in that table the voltage and current inputs between the anode and the cathode of the cell and to the radiation tube were monitored. This enables a calculation of the total electrical energy input to the cell as follows:

Between Anode and Cathode Voltage		Amperage		Time in Seconds		Watt seconds
8.5	×	17	×	75	=	11,220
8.5	×	17	×	523	=	75,574
8.6	×	17	×	162	=	23,684
8.6	×	17	×	830	=	121,346
8.5	×	17	×	405	=	58,523
8.4	×	17	×	605	=	86,394
8.3	×	17	×	430	=	60,673
8.2	×	17	×	609	=	84,894
				3,639		522,308
3.38	×	70	×	565	=	133,679
3.35	×	70	×	235	=	55,107
3.34	×	70	×	360	=	84,168
3.32	×	70	×	305	=	70,882
3.31	×	70	×	675	=	156,398
3.30	×	65	×	700	=	150,150
3.29	×	62	×	255	=	52,014
3.28	×	62	×	310	=	63,041
3.27	×	61	×	234	=	46,676
				3,639		812,115

The total electrical energy input to the cell during the test period was therefore 1,334,423 watt seconds or 0.371 kilowatt hours.

During the test seventy milliliters of water was converted to hydrogen and oxygen gas. This is equal to 3.89 moles of water and, since each mole of water produces 1 mole of hydrogen and ½ mole of oxygen, the weight of hydrogen produced during the test period was $3.89 \times 2 = 7.78$ grams or 0.017 pounds. Thus, the rate of electrical consumption of the cell was 21.63 kilowatt hours per pound of hydrogen produced.

One common parameter used for expressing the efficiency of an electrolytic cell is the total electrical input in kilowatt hours required to produce 1,000 standard cubic feet of hydrogen and a figure of 79 kilowatt hours per 1000 S.C.F. is regarded as 100% efficiency. The test results indicate that the illustrated apparatus requires 121 kilowatt hours per 1,000 S.C.F. and on this basis its efficiency is 65.53%.

Another basis for measuring the performance of electrolytic cells is to calculate the thermal efficiency defined as

$$\frac{\text{higher heating value of hydrogen produced}}{\text{electrical energy consumed}} \times 100$$

The higher heating value of hydrogen is defined as 286 kjoules per mole. Therefore, the thermal efficiency demonstrated in the test was:

$$\frac{286\ kj \times \frac{70}{18}\ \text{moles}}{(.371\ kWhr \times 3600)kj} \times 100 = \frac{1112.22\ kj}{1335.6\ kj} \times 100 = 83.27\%$$

The above results compare very favourably with the performance of the most efficient electrolysers which are at present commercially available. A comparison with known electrolysers is set out in table B. It will be seen that the only known electrolyser which operates at the same efficiency levels is one produced by Life Systems Inc. However, this operates at very high pressure and high temperature and is not available commercially. Compared with the existing systems the present apparatus operates at very low pressure and temperature and has a high output for its size. It is also relatively cheap to produce.

TABLE A

RESULTS OF TEST ON APPARATUS OF FIGURES 12 - 26	
Electrolyte	25% of KOH
Electrolyte volume at start of test period	600 ml
Electrolyte volume at end of test period	530 ml
Water converted during test period	70 ml
Total duration of test period	60 mins 39

TABLE A-continued

Voltage to Inverter Circuit		Voltage between Anode/Cathode	
Time	Volts	Time	Volts
1 min 15	8.5	3 min 25	3.38
9 min 58	8.6	9 min 25	3.35
12 min 40	8.6	13 min 20	3.34
16 min 30	8.6	19 min 20	3.32
20 min 20	8.6	24 min 25	3.31
26 min 30	8.5	29 min 05	3.31
33 min 15	8.4	35 min 50	3.30
37 min 25	8.4	41 min 40	3.30
43 min 20	8.3	47 min 20	3.29
49 min 30	8.3	51 min 35	3.28
50 min 30	8.2	56 min 45	3.27
54 min 55	8.2	59 min 55	3.27
58 min 25	8.2		
60 min 39	8.2		

Current to Inverter Circuit		Current between Anode/Cathode	
Time	Amps	Time	Amps
3 min 03	17	0 min 0	70
steady		9 min 06	70
60 min 32	17	12 min 40	70
		18 min 05	70
		23 min 55	70
High Voltage on Radiation Tube		29 min 55	70
Time	KV	36 min 30	68
11 min 25	41	41 min 10	65
19 min 55	41	47 min 40	64
20 min 15	40	53 min 30	62
28 min 10	40	56 min 20	62
34 min 35	39	59 min 25	61
39 min 05	39		
42 min 50	38		
48 min 40	38		
53 min 05	37		
57 min 45	37		

Current between tube filament and anode varied 4.72 to 4.9 milliamps
Filament current varied 1.56 to 1.58 amps
Filament voltage varied 2.68 to 2.65 volts
Maximum electrolyte temperature 54° C

MAIN INFORMATION TAKEN FROM A PAPER TO 10TH INTERSOCIETY ENERGY CONVERSION CONFERENCE AUGUST 1975 BY KNOPIC & GREGORY OF INSTITUTE OF GAS TECHNOLOGY

Company and Model	Commercially Available	Weight lbs.	Size L" × W" × H"	Output Rate	Electrode
TELEDYNE ISOTOPES					
Small	Yes	80	10" × 14" × 26"	.177c.ft. per min.	Porous
Medium	Yes	1000–2000 lbs. per cabinet	33" × 74" × 64"	.177 to 7.06 c.ft. per min.	Porous
Large (Multiple System Packages)	Yes		260 s.ft. floor space per basic package	½–4 tons per day	Porous
GENERAL ELECTRIC CO.					
Solid Polymer Electrolyte	Yes	30	<1 c.ft.		Platinum
ELECTROLYSER CORP. - CANADA					
Modular Stuart Cell		1665 - 5135 lbs.	44" × 12–33" × per cell	63.6 – 350 c.ft. per hour	Nickel Plated Steel
Stuart Package Hydrogen Generator			25" × 48" ×0 58"	20 c.ft. per hour	Nickel Plated Steel
LITE SYSTEMS INC.	No				Noble Metal
DE NORA	Yes		×196" × 63"		(Gold plated nickel) Low Carbon Steel
COMINCO					N.P. Anode
(one of largest plants in world)				41 tons	Mild Steel
HORVATH SYSTEMS				per day 1.45 liters per min.	N.P. Anode

Company and Model	Operating Pressure	Operating Temp.	kWhr per lb. H_2 Produced	Thermal Efficiency	kWhr per 1000 SCF
TELEDYNE ISOTOPES					
Small		130° F	55.4	31.8	310
Medium	70–100 p.s.i.g.		30.4	58	170
Large (Multiple System Packages)	100 p.s.i.g.		25.2	70	140
GENERAL ELECTRIC CO.					
Solid Polymer Electrolyte			23.8	74	133.3

-continued

MAIN INFORMATION TAKEN FROM A PAPER TO 10TH INTERSOCIETY ENERGY CONVERSION CONFERENCE AUGUST 1975 BY KNOPIC & GREGORY OF INSTITUTE OF GAS TECHNOLOGY

ELECTROLYSER CORP. - CANADA					
Modular Stuart Cell	10" WG	70° C	24.5	72	128
Stuart Package Hydrogen Generator			26.8	66	150
LIFE SYSTEMS INC.	600 p.s.i.	220° F	20.3	87	117
DE NORA			22.0	80	123.2
COMINCO		140° F	28.6	62	160
(one of the largest plants in world)					
HORVATH SYSTEM	Low	54° C	21.6	83.3	121

What I claim is:

1. A method of decomposition of water to produce hydrogen and oxygen comprising the steps of

placing an electrically conductive aqueous solution in a vessel in contact with a pair of separated electrodes,

causing electric current to flow between said electrodes while simultaneously irradiating the aqueous solution with electromagnetic radiation of wave length less than 10^{-10} meters and a stream of neutrons, and

collecting hydrogen and oxygen which accumulates at the electrodes as highly ionised gases in which the hydrogen contains a higher proportion of deutrons than in naturally occurring hydrogen.

2. A method as claimed in claim 1 wherein said electrodes are cylindrically arranged about a common centre line and wherein the electromagnetic radiation and said stream of neutrons are generated in a radiation generator disposed within the inner electrode and radiate outwardly through the inner electrode into said aqueous solution.

3. A method as claimed in claim 2, wherein a magnetic field is applied to said aqueous solution in field directions extending between said electrodes which magnetic field produces a "spin-flip" effect on protons released from the aqueous solution.

4. A method as claimed in claim 1, wherein the stream of neutrons is a pulsed stream of neutrons associated with said electromagnetic radiation and wherein the highly ionised hydrogen and oxygen gases are collected as a gaseous mixture.

5. A method of decomposition of water to produce hydrogen and oxygen comprising the steps of

placing an electrically conductive aqueous solution in a vessel in contact with a pair of separated electrodes arranged cylindrically one within the other,

producing by electron bombardment of an anode in a radiation tube disposed within the inner electrode a beam of electromagnetic radiation of wave length less than 10^{-10} meters which radiates outwardly through the inner electrode to irradiate the aqueous electrolyte between the electrodes,

causing an electric current to flow between the electrodes and through the irradiated electrolyte, and

collecting hydrogen and oxygen gases which accumulate at the electrodes.

6. A method as claimed in claim 5, wherein the electron bombardment of the anode in the radiation tube also produces a pulsed stream of neutrons associated with said beam of electromagnetic radiation which stream of neutrons also enters the irradiated electrolyte and the hydrogen and the oxygen are collected as highly ionised gases in which the hydrogen comprises a higher proportion of deuterons than in naturally occurring hydrogen.

7. A method as claimed in claim 5 wherein said electron bombardment is produced by applying between the anode and a filament of said radiation tube a pulsating DC voltage of at least 17,000 volts and pulse frequency of at least 3,000 pulses per second.

8. A method as claimed in claim 5 wherein there is generated within the said vessel a magnetic field which in the vicinity of the irradiated electrolyte extends between said electrodes and which in the vicinity of the radiation tube is directed so as to accelerate the bombardment electrons.

9. A method of decomposition of water to produce hydrogen and oxygen comprising the steps of

placing an electrically conductive aqueous solution in a vessel in contact with a pair of separated electrodes

irradiating the aqueous solution with electromagnetic radiation of wavelength less than 10^{-10} meters while causing electric current to flow between said electrodes and collecting hydrogen and oxygen gases which accumulate therefrom.

10. A method as claimed in claim 9, wherein a pulsed stream of neutrons is associated with said electromagnetic radiation and wherein the hydrogen and oxygen gases are collected as a highly ionized gaseous mixture in which the hydrogen contains a higher proportion of deuterons than naturally occurring hydrogen.

11. A method as claimed in claim 10, wherein a magnetic field is applied to said aqueous solution in field directions extending between said electrodes.

12. A method as claimed in claim 11, wherein the magnetic field produces a "spin flip" effect on portons released within the aqueous solution.

13. A method as claimed in claim 12, wherein said magnetic field is generated by permanent magnets.

14. A method as claimed in claim 9, wherein said electrodes are cylindrically arranged about a common centre line and wherein the electromagnetic radiation is generated in a radiation generator disposed within the inner electrode and radiates outwardly through the inner electrode into said aqueous solution.

* * * * *

UNITED STATES PATENT AND TRADEMARK OFFICE

CERTIFICATE OF CORRECTION

PATENT NO. : 4,107,008

DATED : August 15, 1978

INVENTOR(S) : Stephen Horvath

It is certified that error appears in the above-identified patent and that said Letters Patent are hereby corrected as shown below:

Column 1, line 44, "it" should be --It--.

Column 3, line 67, "7" should be --17--.

Column 4, line 47, "10,00" should be --10,000--.

Column 6, line 45, "200" should be --220--.

Column 7, line 27, "82.83." should be --82,83.--.

Column 9, line 22, "79" should be --78--.

Column 10, line 21, "61" should be --161--.

Column 12, line 21, "this" should be --This--.

Column 12, line 35, "at" should be --as--.

Column 22, line 4, "2 2/3" should be --2 1/2--.

UNITED STATES PATENT AND TRADEMARK OFFICE

CERTIFICATE OF CORRECTION

PATENT NO. : 4,107,008

DATED : August 15, 1978

INVENTOR(S) : Stephen Horvath

It is certified that error appears in the above-identified patent and that said Letters Patent are hereby corrected as shown below:

In the table spanning Columns 25 & 26, the height dimension for "Modular Stuart Cell" is missing. A height of --49"-- should be inserted.

Column 28, line 51, "portons" should be --protons--.

Signed and Sealed this

Tenth Day of *April 1979*

[SEAL]

Attest:

RUTH C. MASON
Attesting Officer

DONALD W. BANNER
Commissioner of Patents and Trademarks