(11) (A) No. 1060839

(45) ISSUED 790821

(52) CLASS 204-78
C.R. CL. 204-91.8
204-135

(51) INT. CL. [2] C25B 1/04, 9/00

(19) (CA) **CANADIAN PATENT** (12)

(54) ELECTROLYSIS USING ELECTROMAGNETIC RADIATION

(70) Horvath, Stephen,
Australia

Granted to Beeston Company Limited,
Hong Kong

(21) APPLICATION No. 230,229

(22) FILED 750626

(30) PRIORITY DATE U.S.A. (485498) 740703 U.S.A. (527083) 741125

No. OF CLAIMS 12

DISTRIBUTED BY THE PATENT OFFICE, OTTAWA.
CCA-274 (12-76)

230229

1060839

ABSTRACT OF THE DISCLOSURE

AUG 21 1979

A novel electrolytic cell performs an electrolysis process at improved efficiencies by generating short wave electromagnetic radiation which irradiates the electrolyte to decompose the electrolyte by radiolysis. Thus the process is one of electrolysis combined with radiolysis. In one embodiment pulses of high voltage electrical energy are applied between the anode and cathode of the cell to generate both the radiation for radiolysis and a pulsed DC current in the electrolyte for electrolysis. In a second embodiment the pulses of high voltage electrical energy are discharged between radiation generator electrodes disposed beneath the electrolyte chamber. In both embodiments a generally cylindrical anode with a fluted outer surface is surrounded by a segmented cathode having an active area equal to the active area of the anode. An electrolyte, which may be a 25 percent solution of potassium hydroxide is introduced into the cell for production of hydrogen and oxygen at the cathode and anode respectively. This high voltage pulses are derived from a DC supply by pulse generating circuitry and a transformer located within an oil filled chamber inside the anode. The transformer generates a magnetic field in the electrolyte which provides preferred paths for the high speed electrons of the short wave electromagnetic radiation and also for the ions in the electrolyte thereby increasing the possibility for collision between the electrons and ions with subsequent improved radiolysis yield.

BACKGROUND OF THE INVENTION

This invention relates to the general field of electrolysis and has particular, but not exclusive, application to the electrolysis of water to form hydrogen and oxygen.

In an electrolysis process a potential difference is applied between an anode and a cathode in contact with an electrolytic conductor to produce an electric current through the electrolytic conductor.

Many molten salts and hydroxides are electrolytic conductors but usually the conductor is a solution of a substance which dissociates in the solution to form ions. The term "electrolyte" will be used herein to refer to a substance which dissociates into ions, at least to some extent, when dissolved in a suitable solvent. The resulting solution will be referred to as an "electrolyte solution".

In a simple electrolysis process the mass of substance liberated at an anode or cathode is, in accordance with Faraday's laws of electrolysis, strictly proportional to the quantity of electricity passed between the anode and cathode. The rate of decomposition of the electrolyte is thus limited and it is generally uneconomical for example, to generate hydrogen and oxygen from water commercially by an electrolysis process.

It is known that compounds, including electrolytes such as water, can be decomposed into their constituent elements by irradiation with short wave electromagnetic radiation. Such radiation induced dissociation or decomposition may be termed "radiolysis". For example, a paper by Dr. Akibumi Danno entitled "Producing Hydrogen with Nuclear Energy" published in the "Chemical Economy and Engineering Review" of June, 1974 describes in some detail the radiolysis of water and a number of hydrocarbons with an explanation of the

elementary reactions involved in such radiolysis. Briefly, it is found that irradiation with short wave x-rays or gamma rays, i.e. electromagnetic radiation of wave length less than 10^{-10} metres, results in direct decomposition of the compounds concerned. For example, if water is irradiated with gamma radiation the water will be dissociated into hydrogen and oxygen. Danno proposes the use of a nuclear reactor as a source of radiation on a massive scale but concludes that water radiolysis is not a very efficient method of producing hydrogen and he proposes instead a process involving radiolysis of carbon dioxide to produce carbon monoxide and oxygen and a subsequent conversion of the carbon monoxide to hydrogen gas by the conventional water/gas conversion process.

SUMMARY OF THE INVENTION

The present invention provides for an electrolysis process in which radiolysis is also present. It is found that with the combination of electrolysis and radiolysis the yield of decomposition products can be greater than that achieved by either a simple electrolysis process or simple radiolysis. The yield rate can be very much improved in the combined electrolysis and radiolysis process by providing a magnetic field in the electrolytic conductor which provides preferred paths for the high speed electrons of the short wave electromagnetic radiation and also for the ions in the electrolytic conductor thereby increasing the possibility for collision between the electrons and the ions with a subsequent improved radiolysis yield.

In one method according to the invention, pulses of high voltage electrical energy are applied between the anode and cathode of an electrolytic cell in such a manner as to generate the necessary short wave length radiation for radiolysis. In another method according to the invention

pulses of high voltage electrical energy are discharged in one or more short wave length radiation generators separate from the anode and cathode but disposed such that the electrolytic conductor within the cell is irradiated by the short wave radiation produced thereby. The high voltage pulses of electrical energy can be generated by a quite modest direct current input supplied and the methods according to the invention will produce a greatly increased yield of electrolysis products over that which could be achieved by passing the supply current through the electrolytic conductor.

The invention also provides apparatus adapted to practise the methods of the invention.

As previously mentioned, the invention is particularly applicable to the electrolysis of water or aqueous solutions to generate hydrogen and oxygen gases and, in order that the invention may be more fully explained, apparatus designed specifically for such generation of hydrogen and oxygen will now be described in detail with reference to the accompanying drawings.

BRIEF DESCRIPTION OF THE DRAWINGS

In the drawings:

Figure 1 is a circuit diagram for one apparatus constructed in accordance with the invention;

Figure 2 is a plan view of an electrolytic cell of the apparatus;

Figure 3 is a cross-section on the line 3-3 in Figure 2;

Figure 4 (on the same sheet as Figure 2) is a cross-section on the line 4-4 in Figure 3;

Figure 5 is a plan view of the electrolytic cell with certain upper parts removed;

Figure 6 is a cross-section on the line 6-6 in Figure 2;

Figure 7 is a cross-section on the line 7-7 in Figure 2;

Figure 8 is a vertical cross-section through a modified form of electrolytic cell;

Figure 9 is a cross-section on the line 9-9 in Figure 8;

Figure 10 is a circuit diagram for the modified apparatus of Figures 8 and 9; and

Figure 11 is a circuit diagram for a further modified apparatus.

DESCRIPTION OF THE PREFERRED EMBODIMENTS

The apparatus illustrated in Figures 1 to 7 comprises an electrolytic cell denoted generally as 11 and having an anode 12 and cathode 13. The apparatus has an electric circuit such as to generate high voltage pulses of electrical energy which are applied between the anode 12 and the cathode 13. Specifically, the circuit is such as to develop the required high voltage pulses from a source of direct current electrical energy which may for example be a 12 volt battery, connected between terminals 14, 15. Line 16 from terminal 14 may be considered as receiving the positive input and line 17 from terminal 15 may be considered as a common negative for the circuit. Line 16 includes a simple ON/OFF master control switch 18.

As shown in Figure 1 the electrical circuit comprises pulse generator circuitry comprising unijunction transistor Q1 with associated resistors R1, R2, R3 and capacitors C2 and C3. This circuitry produces pulses which are used to trigger an NPN silicon power transistor Q2 which in turn provides via a capacitor C4 triggering pulses for a thyristor T1.

Resistor R1 and capacitor C2 are connected in series in a line 21 extending to one of the fixed contacts of a relay RL1. The coil 26 of relay RL1 is connected between line 16 and a line 27 which extends from the moving contact of the relay to the common negative line 17 via a normally closed pressure operated switch 19. The pressure control line 20 of switch 19 is connected in a manner to be described below to a gas collection chamber of electrolytic cell 11 in order to provide a control connection whereby switch 19 is opened when the gas in the collection chamber reaches a certain pressure. However, provided that switch 19 remains closed, relay RL1 will operate when master control switch 18 is closed to provide a connection between lines 21 and 27 thereby to connect capacitor C2 to the common negative line 17. The main purpose of relay RL1 is to provide a slight delay in this connection between the capacitor C2 and the common negative line 17 when the circuit is first energized. This will delay the generation of triggering pulses to thyristor T1 until a required electrical condition has been achieved in the transformer circuitry to be described below. It is preferred that relay RL1 be hermetically sealed and have a balance armature so that it can operate in any position and can withstand substantial shock or vibration.

When the connection between capacitor C2 and line 17 is made via relay RL1, unijunction transistor Q1 will act as an oscillator to provide positive output pulses in line 24 at a pulse rate which is controlled by the ratio of R1:C2 and at a pulse strength determined by the ratio of R2:R3. These pulses will charge the capacitor C3. Electrolytic capacitor C1 is connected directly between the common positive line 16 and the common negative line 17 to filter the circuitry from all static noise.

Resistor R1 and capacitor C2 are chosen such that at the input to transistor Q1 the pulses will be of saw tooth form. This will control the form of the pulses generated in the subsequent circuitry, and the saw tooth pulse form is chosen since it is believed that it produces the most satisfactory operation of the pulsating circuitry. It should be stressed, however, that other pulse forms, such as square wave pulses, could be used. Capacitor C3, which is charged by the output pulses of transistor Q1, discharges through a resistor R4 to provide triggering signals for transistor Q2. Resistor R4 is connected to the common negative line 17 to serve as a gate current limiting device for transistor Q2.

The triggering signals produced by transistor Q1 via the network of capacitor C3 and resistor R4 will be in the form of positive pulses of sharply spiked form. The collector of transistor Q2 is connected to the positive supply line 16 through resistor R6 while the emitter of that transistor is connected to the common negative line 17 through resistor R5. These resistors R5 and R6 control the strength of current pulses applied to a capacitor C4 which discharges through a resistor R7 to the common negative line 17, thereby to apply triggering signals to the gate of thyristor T1. The gate of thyristor T1 receives a negative bias from the common negative line via resistor R7 which thus serves to prevent triggering of the thyristor by the inrush currents.

The triggering pulses applied to the gate of thyristor T1 will be very sharp spikes occurring at the same frequency as the saw tooth wave form pulses established by unijunction transistor Q1. It is preferred that this frequency be of the order of 10,000 pulses per second and details of specific circuit components which will achieve this result are listed below. Transistor Q2 serves as an interface between

unijunction transistor Q1 and thyristor T1, preventing back-flow of EMF from the gate of the thyristor, which might otherwise interfere with the operation of transistor Q1. Because of the high voltages being handled by the thyristor and the high back EMF applied to transistor Q2, the latter transistor must be mounted on a heat sink.

The cathode of thyristor T1 is connected via a line 29 to the common negative line 17 and the anode is connected via a line 31 to the centre of the secondary coil 32 of a first stage transformer TR1. The two ends of transformer coil 32 are connected via diodes D1 and D2 and a line 33 to the common negative line 17 to provide full wave rectification of the transformer output.

First stage transformer TR1 has three primary coils 34, 35, 36 wound together with secondary coil 32 about a core 37. This transformer may be of conventional half cup construction with a ferrite core. The secondary coil may be wound on to a coil former disposed about the core and primary coils 34 and 36 may be wound in bifilar fashion over the secondary coil. The other primary coil 35 may then be wound over the coils 34, 36. Primary coils 34 and 36 are connected at one side by a line 38 to the uniform positive potential of circuit line 16 and at their other sides by lines 39, 40 to the collectors of transistors Q3, Q4. The emitters of transistors Q3, Q4 are connected permanently via a line 41 to the common negative line 17. A capacitor C6 is connected between lines 39, 40 to act as a filter preventing any potential difference between the collectors of transistors Q3, Q4.

The two ends of primary coil 35 are connected by lines 42, 43 to the bases of transistors Q3, Q4. This coil is centre tapped by a line 44 connected via resistor R9 to the positive line 16 and via resistor R10 to the common negative

line 17.

When power is first applied to the circuit, transistors Q3 and Q4 will be in their non-conducting states and there will be no current in primary coils 34, 36. However, the positive current in line 16 will provide via resistor R9 a triggering signal applied to the centre tap of coil 35, and this signal operates to trigger alternate high frequency oscillation of transistors Q3, Q4, which will result in rapid alternating pulses in primary coils 34, 36. The triggering signal applied to the centre tap of coil 35 is controlled by the resistor network provided by resistors R9 and R10 such that its magnitude is not sufficient to enable it to trigger Q3 and Q4 simultaneously but is sufficient to trigger one of those transistors. Therefore only one of the transistors is fired by the initial triggering signal to cause a current to flow through the respective primary coil 34 or 36. The signal required to hold the transistor in the conducting state is much less than that required to trigger it initially, so that when the transistor becomes conductive, some of the signal applied to the centre tap of coil 33 will be diverted to the non-conducting transistor to trigger it. When the second transistor is thus fired to become conductive, current will flow through the other of the primary coils 34, 36 and since the emitters of the two transistors are directly connected together, the positive output of the second transistor will cause the first-fired transistor to be shut off. When the current drawn by the collector of the second-fired transistor drops, part of the signal on the centre tap of coil 35 is diverted back to the collector of the first transistor which is re-fired. It will be seen that the cycle will then repeat indefinitely, so that transistors Q3, Q4 are alternately fired and shut off in very rapid sequence. Thus current pulses flow in alternate sequence through primary coils

34, 36 at a very high frequency, this frequency being constant and independent of changes in input voltage to the circuit. The rapidly alternating pulses in primary coils 34 and 36, which will continue for so long as master control switch 18 remains closed, will generate higher voltage signals at the same frequency in the transformer secondary coil 32.

A dump capacitor C5 bridged by a resistor R8 is connected by a line 46 to the line 31 from the secondary coil of transformer TR1 and provides the output from that transformer which is fed via line 47 to a second stage transformer TR2.

When thyristor T1 is triggered to become conductive the full charge of dump capacitor C5 is released to second stage transformer TR2. At the same time the first stage of transformer TR1 ceases to function because of this momentary short circuit placed across it and consequently thyristor T1 releases, i.e. becomes non-conductive. This permits charge to be built up again in dump capacitor C5 for release when the thyristor is next triggered by a signal from transistor Q2. Thus during each of the intervals when the thyristor is in its non-conducting state the rapidly alternating pulses in primary coils 34, 36 of transformer TR1 produced by the continuously oscillating transistors Q3, Q4 produce, via the transformer coupling, relatively high voltage output pulses which build up a high charge in capacitor C5 and this charge is released suddenly when the thyristor is triggered. In a typical apparatus using the 12 volt DC supply at terminals 14, 15 pulses of the order of 22 amps at 300 volts may be produced in line 47.

As previously mentioned relay RL1 is provided in the circuit to provide a delay in the connection of capacitor C2 to the common negative line 17. This delay, although very short, is sufficient to enable transistors Q3, Q4 to start oscillating

to cause transformer TR1 to build up a charge in dumping capacitor C5 before the first triggering signal is applied to thyristor T1 to cause discharge of the capacitor.

The circuit includes a second stage transformer TR2. This is a step-up transformer comprising a primary coil 48 and a secondary coil 49 wound about a common core 51 and it produces pulses of very high voltage in the secondary coil 49 which pulses are applied between anode 12 and cathode 13. As shown in Figure 1, the secondary coil 49 is connected not only between the anode and the cathode but also back to the negative side of primary coil 48. The second stage transformer is built into the anode of the electrolytic cell 11. Its physical construction and the manner in which its electrical connections are made will be explained in detail below.

In a typical apparatus the output from the first stage transformer TR1 would be 300 volt pulses of the order of 22 amps at 10,000 pulses per second at a duty cycle of slightly less than 0.1. This can be achieved from a uniform 12 volt and 40 amps DC supply applied between terminals 14, 15 using the following circuit components: -

R1 2.7 K ohms 1/2 watt 2% resistor
R2 220 ohms 1/2 watt 2% resistor
R3 100 ohms 1/2 watt 2% resistor
R4 22 K ohms 1/2 watt 2% resistor
R5 100 ohms 1/2 watt 2% resistor
R6 220 ohms 1/2 watt 2% resistor
R7 1 K ohms 1/2 watt 2% resistor
R8 10 M ohms 1 watt 5% resistor
R9 100 ohms 5 watt 10% resistor
R10 5.6 ohms 1 watt 5% resistor
C1 2200 MF 16V electrolytic capacitor

C2 0.10 MF 100 V 10% capacitor

C3 2.2 MF 100V 10% capacitor

C4 1 MF 100 V 10% capacitor

C5 1 MF 1000V Ducon paper capacitor 5 S10A

C6 .022 MF 160V capacitor

Q1 2N 2647 PN unijunction transistor

Q2 2N 3055 NPN silicon power transistor

Q3 2N 3055 NPN silicon power transistor

Q4 2N 3055 NPN silicon power transistor

T1 BTW 30 800 RM fast turn-off thyristor

D1 A 14 P diode

D2 A 14 P diode

RL1 PW5LS hermetically sealed relay

PS1 P658A-10051 pressure switch

TR1 Half-cup transformer cores 36/22-341

Coil former 4322-021-30390 wound to provide a turns ratio between secondary and primary of 18:1

Secondary coil 32 = 380 turns

Primary coil 34 = 9 turns

Primary coil 36 = 9 turns

Primary coil 35 = 4 turns

Transistors Q2, Q3 and Q4 each need to be mounted on a heat sink and a suitable heat sink for this purpose is 35D 3CB. The other circuit components may be installed in a steel container and the heat sink mounted transistors fitted to an exterior surface of the steel container. Alternatively it would be possible to mount at least transistor Q2 within the box if an appropriate heat sink with extended surface area is provided within the box.

The physical construction of electrolytic cell 11 and the second stage transformer TR2 is illustrated in Figs.

2 to 7. The cell comprises an outer casing 71 having a tubular peripheral wall 72 and top and bottom closures 73, 74. Bottom closure 74 is comprised of a domed cover 75 and an electrically insulating disc 76 which are held to the bottom of peripheral wall 72 by circumferentially spaced clamping studs 77. Top closure 73 is comprised of a pair of top plates 78, 79 disposed face-to-face and held by circumferentially spaced clamping studs 81 screwed into tapped holes in the upper end of peripheral wall 72.

The anode 12 of the cell is of generally tubular formation. It is disposed vertically within the outer casing and is clamped between upper and lower insulators 82, 83. Upper insulator 82 has a central boss portion 84 and an annular peripheral flange portion 85, the outer rim of which is clamped between upper closure plate 79 and the upper end of peripheral wall 72. Lower insulator 83 has a central boss portion 86, an annular flange portion 87 surrounding the boss portion and an outer tubular portion 88 standing up from the outer margin of flange portion 87. Insulators 82, 83 are moulded from an electrically insulating material which is also alkali resistant. Polytetrafluoroethylene is one suitable material.

When held together by the upper and lower closures, insulators 82, 83 form an enclosure within which anode 12 and the second stage transformer TR2 are disposed. Anode 12 is of generally tubular formation and it is simply clamped between insulators 82, 83 with its cylindrical inner periphery located on the boss portions 84, 86 of those insulators. It forms a transformer chamber which is closed by the boss portions of the two insulators and which is filled with a suitable transformer oil. An O-ring seal 90 is fitted between insulator boss 86 and the anode to prevent loss of oil from the transformer chamber.

The transformer core 51 is formed as a laminated mild steel bar of approximately 3/4" square section. It extends vertically between the insulator boss portions 84, 86 and its ends are located within recesses in those boss portions. The secondary transformer winding 49 is wound directly onto core 51 whereas the primary winding 48 is wound on a tubular former 89 so as to be spaced outwardly from the secondary winding within the oil filled transformer chamber.

The cathode 13 is in the form of a longitudinally slotted tube which is a close fit within the outer tubular portion 88 of insulator 83. It has eight equally spaced longitudinal slots 91, so that it is essentially comprised of eight cathode strips 92 disposed between the slots and connected together at top and bottom only.

Both the anode and cathode are made of solid nickel. The outer periphery of the anode is machined to form eight circumferentially spaced flutes 93 which have arcuate roots meeting at sharp crests or ridges 94 defined between the flutes. The eight anode crests 94 are radially aligned centrally of the cathode strips 92, and the perimeter of the anode measured along its external surface is equal to the combined widths of the cathode strips measured at the internal surfaces of these strips, so that over the major part of their lengths the anode and cathode have equal effective areas. This equalization of areas generally has not been available in prior art cylindrical anode/cathode arrangements.

The annular space 95 between the anode and cathode serves as the electrolyte solution chamber. This chamber is divided by a tubular membrane 96 made of nickel film of no more than 0.015 inch thickness perforated by holes of no more than 0.004 inch diameter of 5000 perforations per square inch. This perforated membrane serves as a barrier against mixing of

hydrogen and oxygen generated at the cathode and anode respectively while permitting the electrolytic flow of current between the electrodes. Its ends fit into annular slots in the peripheral flanges of upper and lower insulators 82, 83 whereby it is electrically isolated from all other components of the cell. This barrier may alternatively be formed by a tightly stretched web of nylon mesh material of sufficiently small mesh size, i.e. such that the mesh openings will not pass bubbles of greater than 0.004 inch diameter. The mesh material may be stretched between end rings of a plastic holder fitted between the annular slots in insulators 82, 83.

Initially chamber 95 is filled approximately 75% full with an electrolyte solution of 25% potassium hydroxide in distilled water. Thereafter, as the reaction progresses, the water is depleted and is made up with fresh water admitted into the outer section of chamber 95 via an inlet nozzle 97 formed in upper closure plate 78. The electrolyte solution passes from the outer to the inner section of chamber 95 via the holes in membrane 96. It will be noted however, that membrane 96 is perforated only below the level of the electrolyte solution so that there may be no mixing of hydrogen and oxygen within the cell. The holes, while large enough to allow passage of electrolyte solution therethrough are small enough to prevent passage of bubbles of hydrogen and oxygen normally occurring in the reaction. In the case where the gas barrier is formed by nylon mesh the upper ring of the holder would be formed to provide a solid barrier above the level of the electrolyte solution.

Nozzle 97 has a flow passage 98 extending to an electrolyte inlet valve 99 controlled by a float 101 in chamber 95. Valve 99 comprises a bushing 102 mounted within an opening extending downwardly through upper closure plate 79

and the peripheral flange 85 of upper insulator 82 and providing a valve seat which cooperates with valve needle 103. Needle 103 is lightly biased upwardly by a spring 104 within valve bushing 102. However, the pressure of electrolyte solution within nozzle 97 is sufficient to push the needle downwardly against this spring to allow admission of electrolyte solution to chamber 95 until float 101 lifts the needle hard against the valve seat. The float slides vertically on a pair of star-section slide rodes 106 extending between the upper and lower insulators 82 and 83 and also formed of polytetrafluoroethylene. These rods extend through appropriate holes 107 through the float.

The depth of float 101 is chosen such that the electrolyte solution fills only approximately 75% of the chamber 95, leaving the upper part of the chamber as a gas space which can accommodate expansion of the generated gas due to heating within the cell.

As electrolysis of the electrolyte solution within chamber 95 proceeds, hydrogen gas is produced at the cathode, and oxygen gas is produced at the anode. These gases bubble upwardly into the upper part of chamber 95 where they remain separated in the inner and outer compartments defined by membrane 96, and it should be noted that the electrolyte solution enters that part of the chamber which is filled with oxygen rather than hydrogen so there is no chance of leakage of hydrogen back through electrolyte inlet nozzle 97.

The abutting faces of upper closure plates 78, 79 have matching annular grooves forming within the upper closure inner and outer gas collection passages 108, 109. Outer passage 108 is circular, and it communicates with the hydrogen compartment of chamber 95 via eight ports 111 extending downwardly through top closure plate 79 and the peripheral flange

of upper insulator 82 adjacent the cathode strips 92. Hydrogen gas flows upwardly through ports 111 into passage 108 and thence upwardly through a one-way valve 112 (Fig. 7) into a reservoir 113 provided by a plastic housing 114 bolted to top closure plate 78 by a centre stud 115 and sealed by a gasket 116. The lower part of housing 114 is charged with water 117, and the hydrogen passes inwardly into reservoir 113 via a tube 118. Valve 112 comprises a bushing 119 providing a valve seat for valve stem 121 which is biased downwardly by a spring 122 and also by the weight of water acting on it.

Hydrogen is withdrawn from reservoir 113 via a crooked tube 123 which connects with an outlet passage 124 in top closure plate 78. Outlet passage 124 terminates in a hydrogen delivery nozzle 125 which may deliver the hydrogen either to storage or directly to the point of consumption.

Oxygen is withdrawn from chamber 95 via the inner annular passage 109 in the top closure. Passage 109 is not circular but has a scalloped configuration to extend around the electrolyte inlet. Oxygen enters it through seven ports 131 extended through top closure plate 79 and the annular flange portion of upper insulator 82. The oxygen flows upwardly from passage 109 through a one-way valve 132 and into a reservoir 133 provided by a plastic housing 134. The arrangement is similar to that for withdrawal of hydrogen and will not be described in great detail. Suffice to say that the bottom of the chamber is charged with water and the oxygen is withdrawn through a crooked tube 135 and an outlet passage 136 in top closure plate 78 terminating in an oxygen delivery nozzle 137.

The pressure sensing tube 20 of control switch 19 is connected directly to the upper part of chamber 95 via passage 138 in top closure plate 78 and upper insulator 82 to sense

the hydrogen pressure within the upper part of this chamber. If this pressure rises above a predetermined level switch 19 operates to disconnect capacitor C2 from the common negative line 17. This removes the negative signal from capacitor C2 which is necessary to maintain continuous operation of the pulse generating circuitry for generating the triggering pulses on thyristor T1 and these triggering pulses therefore cease. The transformer TR1 continues to remain in operation to charge dumping capacitor C5, but because thyristor T1 cannot be triggered, dumping capacitor C5 will simply remain charged until the hydrogen pressure in chamber 95 falls below the predetermined level and triggering pulses are applied once more to thyristor T1. Pressure switch 19 thus controls the rate of gas production according to the rate at which it is withdrawn. It is thus possible for example, to feed the hydrogen and oxygen gases directly to an internal combustion engine without intermediate storage, and the apparatus will produce the gases according to demand. The stiffness of the control springs for gas escape valves 112, 132 must of course be chosen to allow escape of the hydrogen and oxygen in the proportions in which they are produced by electrolysis, i.e. in the ratios 2:1 by volume.

Reservoirs 113, 133 are provided as a safety precaution. If a sudden back-pressure were developed in the delivery pipes this could only shatter the plastic housings 114, 134 and could not be transmitted back into the electrolytic cell. Switch 19 would then operate to stop further generation of gases within the cell.

The electrical connections of secondary transformer TR2 are shown in Figure 3. The two ends of the primary transformer coil 48 are connected by wires 156, 157 to conductors 158, 159 which extend upwardly through the central boss portion

of upper insulator 82. The upper ends of conductors 158, 159 project upwardly as pins within a socket 161 formed in the top of upper insulator 82. The top of socket 161 is closed by a cover 162 which is held by a centre stud 163 and has a passage 164 through which wires from the external circuit may be extended and connected to conductors 158, 159 by any suitable connector (not shown) located within socket 161.

The ends of secondary coil 49 are connected between the anode and the cathode and an additional connection is made to the conductor 158 connected to the negative side of the primary coil. Specifically, one end of coil 49 is connected to the anode by a wire 141, this connection being entirely within the anode. The other end of coil 49 is connected to the cathode via a wire 142 which extends downwardly through a hole in the bottom insulator 83 and then horizontally to leave casing 71 between bottom insulating disc 76 and insulator 83. The upper face of disc 76 and the lower face of insulator 83 are grooved to receive and clamp onto wire 142. Outside the casing, wire 142 is connected to a cathode terminal bolt 143. Terminal bolt 143 has a stem 144 extending through an opening in the cathode and an insulating bush 145 fitted in an aligned opening in the casing wall 72. The head 146 of the terminal bolt is drawn against the inner periphery of the cathode by tightening of a clamping nut 147, and the end of wire 142 has an eye which is clamped between nut 147 and a washer 148 by tightening a terminal end nut 149. A washer 151 is provided between nut 147 and bush 145, and sealing O-rings 152, 153 are provided between bolt head 146 and the cathode and between bush 145 and casing wall 72 to prevent escape of electrolyte solution. The terminal connection is covered by a housing 154 held in place by fixing screws 155.

The additional electrical connection between coil 49

and conductor 158 is made by a wire 140 connected between the wire 142 and the wire 156.

Assuming an input to secondary transformer TR2 of 22 amps at 300 volts and a coil ratio of 100:1 the output voltage applied between the anode and cathode would then be 30,000 volts at a pulse rate of 10,000 pulses per second, with a current flow of 220 milliamps.

This output produces a discharge between the anode and the electrolyte which results in the production of short wave length electromagnetic radiation and also a pulsating current within the electrolyte. Within the space between the anode and the cathode there is a pulsating magnetic field due to the secondary coil of the transformer and this assists in the generation of the short wave length radiation. Specifically, radiation of wave lengh 10^{-10} metres to 10^{-13} metres is produced and this radiation produces radiolysis of the electrolyte while the electrolytic flow of current provides for release of the decomposition products of hydrolysis.

The configuration of the anode and the cathode and the arrangement of the secondary transformer within the central anode is of great importance. The anode and cathode, being constructed of magnetic material, are acted on by the magnetic field of the transformer TR2 to become, during the period of energization of that transformer, strong conductors of magnetic flux to create a strong magnetic field in the inter-electrode space between the anode and the cathode. Moreover, the fluted external periphery of the anode and the strip formation of the cathode, shapes this magnetic field such that field lines from the anode are caused to intersect field lines from the cathode as indicated by the respective sets of dotted lines A and B drawn in one portion of the electrolyte chamber in Figure 4. The high speed electrons of the short wave electromagnetic

radiation will tend to follow these field lines. Moreover, the hydrogen and oxygen ions in the electrolyte will be concentrated along these field lines and will, in fact, move along them. Thus, the statistical possibility of collison between the high speed electrons of the short wave length radiation and the ions in the electrolyte is very much improved by the generation of this particular magnetic field. Moreover, there is a greatly increased possibility of collision between the ions themselves since these will tend to collide at the intersections of the field lines A and B with subsequent improved liberation of hydrogen and oxygen gases. Thus, the configuration of the anode and cathode which produces intersecting magnetic field lines is extremely important in improving the efficiency of the radiolysis process and also in liberating the decomposition products of hydrogen and oxygen. This particular configuration also causes the surface area of the anode to be extended and permits an arrangement in which the anode and cathode have equal surface areas which is most desirable in order to minimize electrical losses. It is also desirable that the anode and cathode surfaces at which gas is produced be roughened, for example, by sand blasting. This promotes separation of the gas bubbles from the electrode surfaces and avoids the possibility of overvoltages. The anode and cathode may both be made of nickel but this is not essential, and they might alternatively be formed of nickel plated steel, or they could be made of platinum or be platinum plated.

The heat generated by transformer TR2 is conducted via the anode to the electrolyte solution and also increases the mobility of the ions within the electrolyte solution and thus also contributes to the progress of electrolysis and radiolysis. If desired for dissipation of heat there may be provided cooling fins such as fins 150. The location of the transformer

within the anode also enables the connections of the second coil 49 to the anode and cathode to be made of short, well protected conductors.

Dumping capacitor C5 will determine a ratio of charging time to discharge time which will be largely independent of the pulse rate. The pulse rate determined by the unijunction transistor Q1 must be chosen so that the discharge time is not so long as to produce overheating of the transformer coils and more particularly the secondary coil 49 of transformer TR2. With the saw tooth wave input and sharply spiked output pulses of the preferred oscillator circuit the duty cycle of the pulses produced at a frequency of 10,000 pulses per second was about 0.006. This pulse form helps to minimise overheating problems in the components of the oscillator circuit at the high pulse rates involved. A duty cycle of up to about 0.1, as may result from a square wave input, would be feasible but at a pulse rate of 10,000 pulses per second, some of the components of the oscillator circuit would then be required to withstand unusually high heat inputs. A duty cycle of about 0.005 would be a minimum which could be obtained with the illustrated type of oscillator circuitry.

The illustrated electrolytic cell 11 is designed to produce hydrogen and oxygen at a rate sufficient for operation of internal combustion engines and other uses known in the art. Typically, it may have a diameter of about 8 inches and a height of about 8 inches, so that it will be seen to be extremely compact.

A modified apparatus constructed in accordance with the invention is illustrated in Figures 8 to 10. This apparatus is largely the same as that already described with reference to Figures 1 to 7 and common components have been identified by the same reference numerals. In this case however the output

of the secondary transformer TR2 is not applied directly between the anode 12 and the cathode 13, but is instead applied to radiation generators denoted generally as 201 mounted in the lower part of the electrolytic cell and in addition a constant DC potential, for example 12 volts, is applied between the anode and cathode as indicated in Figure 10. Modifications made to the bottom part of the electrolytic cell involve a thickening of the central boss portion of lower insulator 83. The thickened boss portion is indicated as 86A. The insulating disc 76 of the previous apparatus is eliminated and the lower domed cover is modified and is indicated in Figures 8 and 9 as 75A. The modification of cover 75A includes the provision of a peripheral upstanding sill 202 and the cover is fastened to the bottom of outer casing 71 by long clamping studs 77A extending through vertical holes in the sill 202.

Radiation generators 201 are disposed directly beneath the annular electrolyte chamber at diametrically opposite sides of the chamber. They are of identical construction, each comprising a cylindrical ceramic holder 203 which has a central bore to receive tungsten rod electrodes 204, 205. These electrodes are disposed with a gap between them and the holder has an upper notch 210 which exposes the electrode gap. The outer end of electrode 205 has a domed head 206 and a spring 207 is compressed between head 206 and the outer end of a hollow stud 208 which screws into a tapped opening extended radially through sill 202 of cover 75A. The inner end of electrode 205 is sharply pointed and the pointed tip is spaced apart from the adjacent flat end of electrode 204 by a gap of at least .006 inches and preferably about .016 inches. Electrode 204 is shaped as a simple cylindrical tungsten rod fitted with a brass inner end cap 209 which has a tongue 211 engaging a slot 212 in the end of a brass rod 213 mounted in a hole bored diametrically through the thickened boss

86A of insulator 83.

The output of secondary transformer coil 49 is applied to brass rod 213 via the transformer core 51, a spring 214 and a stud 215 which extends downwardly into boss 86A and into a tapped hole in the centre of rod 213. As indicated in Figure 8 wire 141 is in this case inserted into the core 51 rather than being connected to the anode as in the previous apparatus and the wire 142 of the previous apparatus is eliminated so there is no connection between the secondary coil and the cathode. Instead a constant 12 volt DC supply is connected directly between the anode and cathode by insulated wires 216, 217. Wire 216 is connected to terminal bolt 143 in place of the wire 142 and wire 217 is extended through a nylon bush 218 in sill 202 of the bottom cover 75A and then upwardly through a hole 219 in insulator 83 and into the lower end of the cathode.

Application of the 30,000 volt pulses to brass rod 213 results in one of the radiation generators 201 acting to generate high intensity gamma radiation which irradiates the electrolyte between the anode and the cathode. The high voltage energy will discharge through that radiation generator which presents the least electrical resistance so that only one generator will operate at any one time. If however one of the generators should fail, the other would start to operate. The rapid pulses of potential difference applied between the electrodes, 204, 205 results in gamma ray radiation because of the impossibility of establishing a current flow between the electrodes sufficient to transmit the high speed electrons involved. The pointed end of electrode 205 increases the resistance to the passage of electrons and therefore enhances the production of gamma radiation of wave length shorter than 10^{-10} metres and generally in the range 10^{-10} metres to 10^{-13} metres.

The strong magnetic field induced by the secondary coil

of transformer TR2 also assists in the generation of gamma radiation and in fact enables generation of relatively high intensity radiation by an open air spark discharge. Even further improvement could be achieved if the electrodes 204, 205 were encapsulated in an evacuated tube.

As in the case of the previous embodiment the intersecting magnetic field lines from the anode and cathode provide preferred paths for the high speed electrons of the gamma radiation and the ions within the electrolyte will also move along these field lines so that the probability of collisons between ions and high speed electrons within the electrolyte is greatly increased and there is also an increased probability of collision of ions at the intersections of the field lines. Thus there is a high rate of decomposition by radiolysis and liberation of decomposition produced by electrolysis.

Figure 11 is a circuit diagram for a modification of the apparatus of Figures 8 to 10. In this case the physical construction of the electrolytic cell as illustrated in Figures 8 and 9 remains unchanged but instead of applying a constant 12 volt DC potential between the anode and cathode, the anode is connected via a control device 300 to the output side of relay RL1. The output side of relay RL1 provides a constant 12 volt DC potential and control device 300 serves to modify this before it is applied to the anode. The decomposition potential for water is 1.8 volts and this is the theoretical minimum for electrolysis of water to proceed. In practice it is necessary to supply an additional voltage, termed overvoltage, and this depends on the physical characteristics of the electrolytic cell and the quantity of electrolyte. If the overvoltage is exceeded no improvement is achieved and the additional voltage is simply wasted in the generation of heat. The purpose of control device 300 is to ensure that the necessary overvoltage is supplied but

additional voltage is minimized. It may also serve to prevent backflow of EMF from the electrolyte to the circuit. It may, for example, comprise a diode or a number of diodes in series to provide a step-down in voltage from the output side of relay RL1 and a consequent increase in current. It may alternatively include means for producing a pulsating DC voltage to be applied to anode 12. Various standard switching circuits could be used for this purpose and in particular a standard multi-vibrator circuit could be used. If a pulsating current is used it is necessary to keep the pulse rate below about 10,000 pulses per minute otherwise the pulsating current induced in the electrolyte will adopt an alternating current characteristic which will retard electrolysis.

Experiments performed on small devices such as that illustrated, have indicated that, in order to produce the necessary short wave electromagnetic radiation, the electric output from transformer TR2 must be at least 10,000 volts, otherwise no appreciable gamma radiation is produced. Although increases in voltage produces increased radiation, the voltage and consequent radiation output must be matched to the physical characteristics of the cell and the amount of electrolyte used. The electric circuit already described produces about 30,000 volts and we have found that this is an optimum for the particular apparatus illustrated. It is also necessary, in order to avoid heating problems in the electrical circuit, that the pulse rate of the electric discharge be greater than 5,000 pulses per second, and preferably of the order of 10,000 pulses per second.

It has further been found that the short wave radiation must have an intensity of at least 6 milli-Roentgen/hour to produce significant radiolysis of water in the apparatus according to the invention. The intensity of radiation required will of course depend on the size of the installation and the

amount of electrolyte irradiated but it is believed that 6 milli-Roentgen/hour must be regarded as an absolute minimum to achieve any significant result even in small apparatus. Apparatus constructed in accordance with Figures 8 to 10 has produced a gamma radiation output of 26 to 28 milli-Roentgen/hour which is quite adequate to produce rapid radiolysis of the electrolyte in such apparatus.

The illustrated apparatus has been advanced by way of example only and the invention is in no way limited to the details of this particular apparatus. It will be appreciated that the present invention will permit the generation of hydrogen and oxygen in large quantities for purposes such as power generation in massive fixed installations. These would require much higher electrical inputs and the electrical circuitry would need to be designed accordingly.

The embodiments of the invention in which an exclusive property or privilege is claimed are defined as follows:

1. A method of decomposition of water to produce hydrogen and oxygen comprising the steps of:-

placing an electrically conductive aqueous solution in a vessel in contact with a pair of separated electrodes,

irradiating the aqueous solution with electromagnetic radiation of wavelength less than 10^{-10} metres while causing electric current to flow between said electrodes and collecting hydrogen and oxygen gases which accumulate therefrom.

2. A method as claimed in claim 1, wherein a magnetic field is applied to said aqueous solution in field directions extending between said electrodes.

3. A method as claimed in claim 1, wherein the electromagnetic radiation is generated by the steps of electrically converting a direct current supply of substantially uniform voltage and current to pulses of electrical energy having a frequency of at least 10,000 pulses per second and each at a greater voltage than said uniform voltage and discharging said pulses between further electrodes separated from the electrodes in contact with said aqueous solution.

4. A method as claimed in claim 3, wherein a constant direct current potential is applied between the electrodes in contact with said aqueous solution to generate said electric current.

5. A method as claimed in claim 1, wherein said electrodes are concentrically arranged about a common

centre line and wherein the outer electrode is segmented to present an electrode area substantially equal to the area of said inner electrode.

6. A method as claimed in claim 5, wherein said electric current is so directed as to cause said outer electrode to be a cathode whereby hydrogen collects at said outer electrode.

7. Apparatus for the decomposition of water to produce hydrogen and oxygen comprising:

a) an electrolytic cell to hold an electrically conductive aqueous solution and including a pair of electrodes to contact the aqueous solution, and

b) energy supply means to apply to the aqueous solution electromagnetic radiation of wavelength less than 10^{-10} metres and to generate an electric current in the aqueous solution between said electrodes.

8. Apparatus as claimed in claim 7, wherein the energy supply means is such as to also establish a magnetic field in field directions extending between said electrodes.

9. Apparatus as claimed in claim 7, wherein the energy supply means comprises a source of direct current electrical energy of substantially uniform voltage and current and electrical converter means to convert that energy to pulses at a frequency of at least 10,000 pulses per second and at a voltage greater than said substantially uniform voltage and a pair of closely spaced further electrodes to receive said pulses and to generate therefrom said electromagnetic radiation.

10. Apparatus as claimed in claim 9, wherein the converter means comprises a first transformer having a primary coil energized by direct current energy from said source and a secondary coil inductively coupled to the primary coil; a dump capacitor connected to the secondary coil of the first transformer so as to be charged by the electrical output of that coil; oscillator means to derive electrical pulses from direct current energy of said source; a switching device switchable from a non-conducting state to a conducting state in response to each of the electrical pulses derived by the oscillator means and connected to the secondary coil of the first transformer and the dump capacitor such that each switchin from its non-conducting state to its conducting state causes the dump capacitor to discharge and also short circuit the first transformer to cause the switching means to revert to its non-conducting state; and a second transformer comprising a primary coil to receive the pulses discharged from the dump capacitor and a secondary coil inductively coupled to the first coil to produce a voltage step-up and electrically connected to said electrode means.

11. Electrolysis apparatus comprising:

a) an electrolytic cell to hold an electrolytic conductor;

b) first tubular electrode disposed within the cell and having a fluid external peripheral

B

surface comprises of outwardly concave longitudinally extending crests spaced circumferentially around said electrode;

c) a second tubular electrode surrounding said first electrode and segmented into a series of electrically connected, circumferentially spaced, longitudinally extending strips, said strips being equal in number to the number of said flutes; said strips being disposed in radial alignment with said crests such that each said crest is directed toward the centerline of the respective strip midway between the side edges of that strip; and said strips having a total active surface area approximately equal to the total active surface area of said flutes; and

d) current generating means for generating a flow of electrolyzing current between said first and second electrodes.

12. Electrolysis apparatus as claimed in claim 11, wherein said current generating means is such that the electrolyzing current flows between said first and second electrodes with the first electrode operating as an anode and the second electrode operating as a cathode.



B

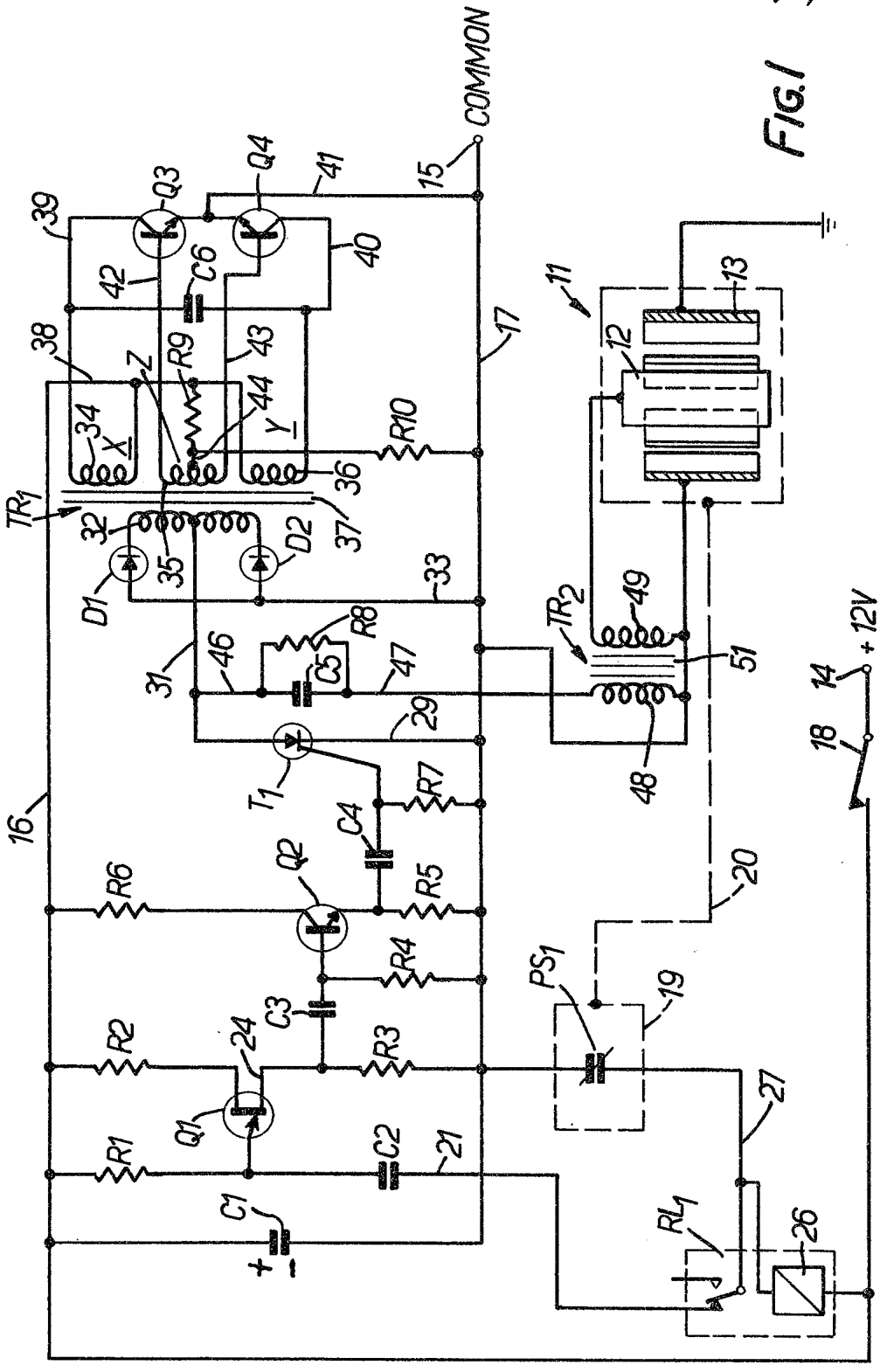

FIG. 1

Gowling & Henderson.

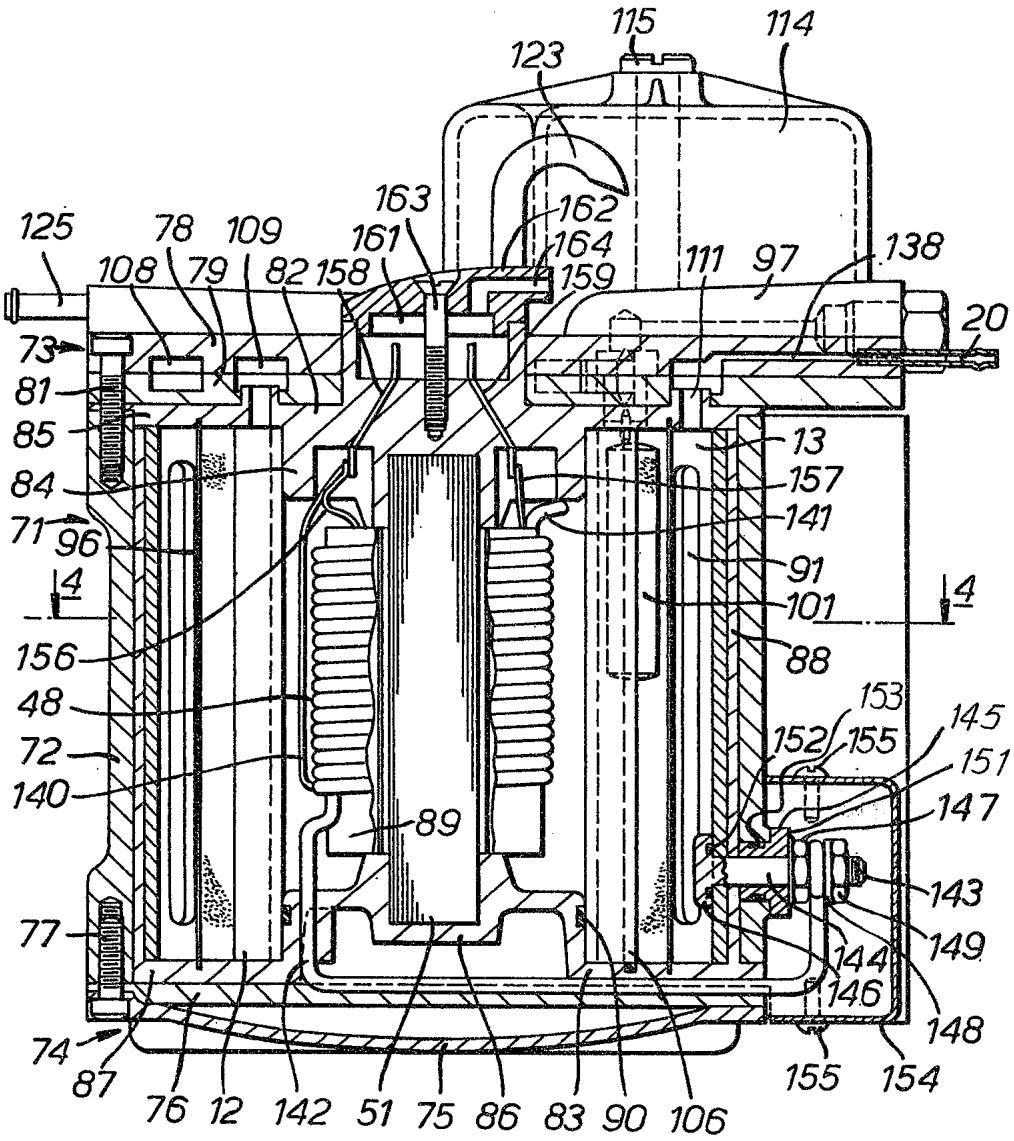

FIG. 3.

Gowling & Henderson.

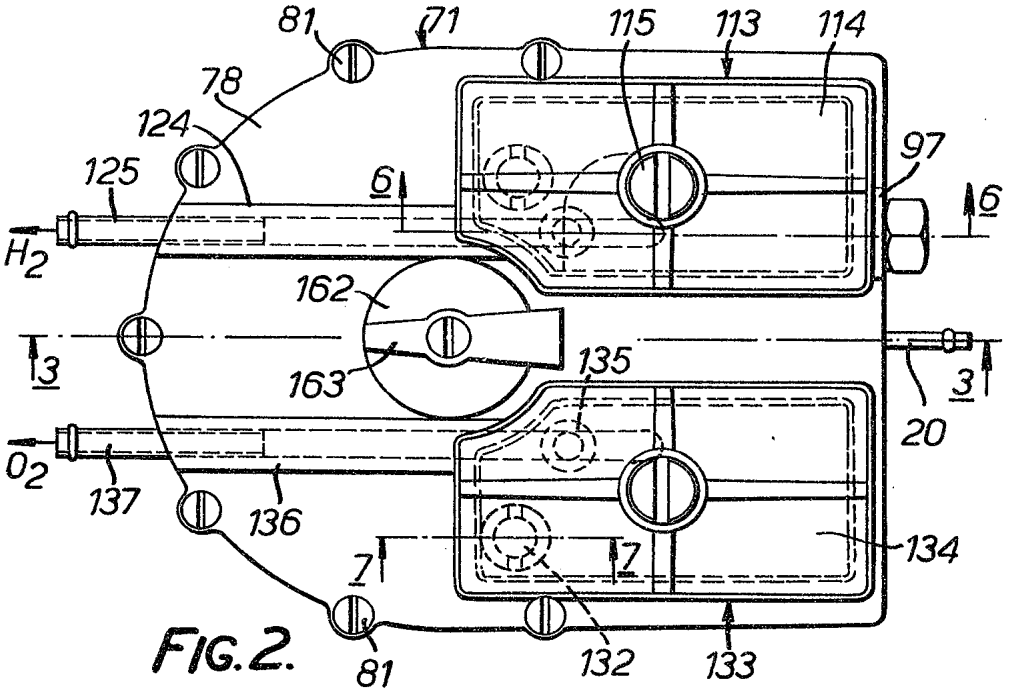

FIG. 2.

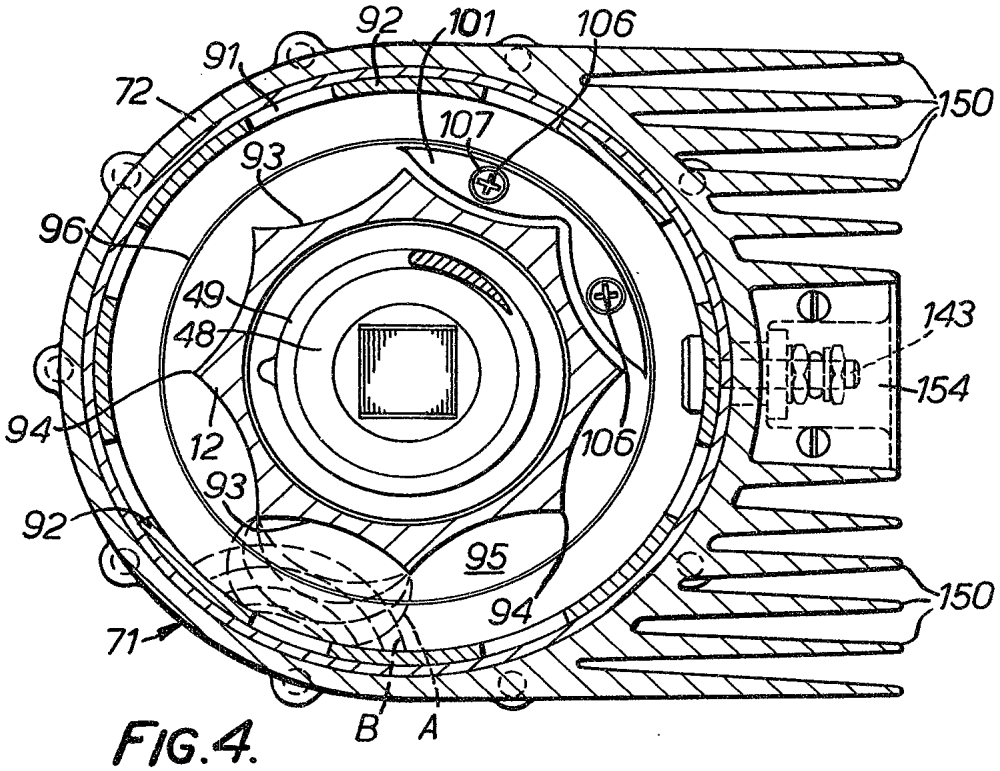

FIG. 4.

Gowling & Henderson.

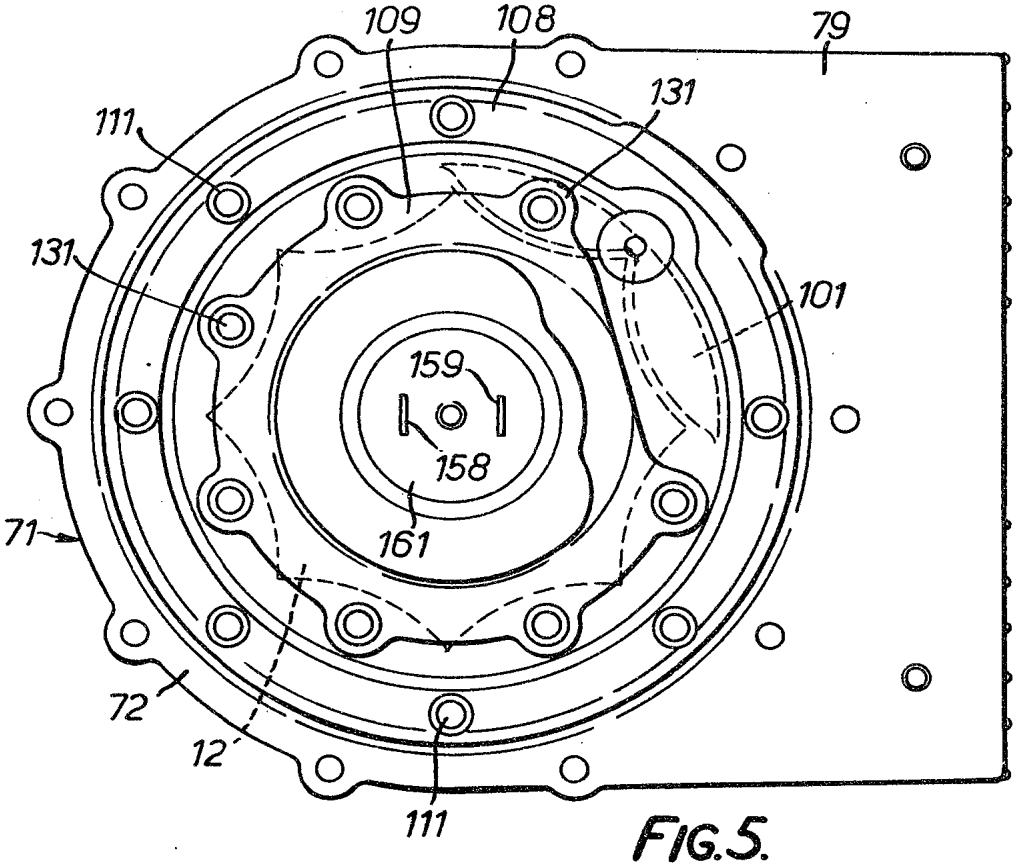

FIG.5.

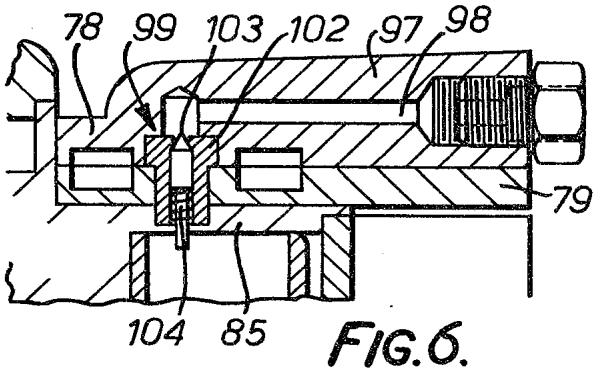

FIG.6.

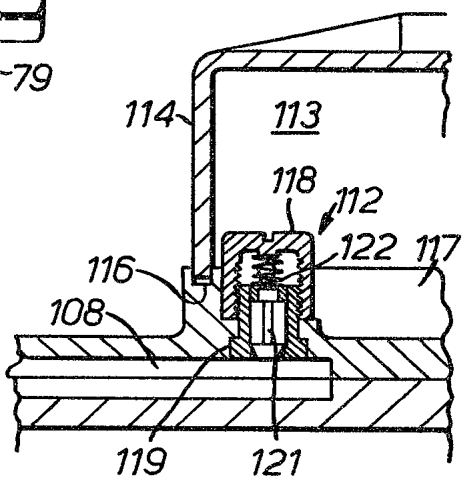

FIG.7.

Gowling & Henderson.

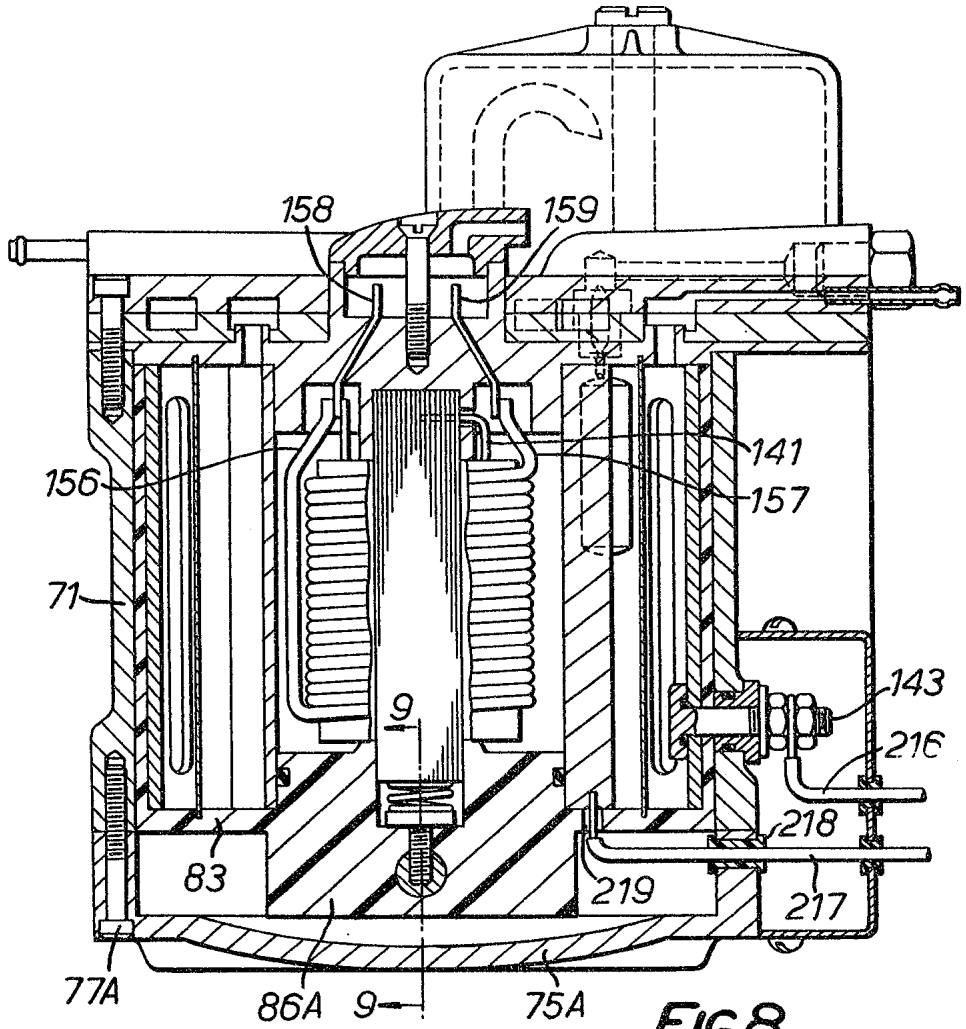

FIG.8.

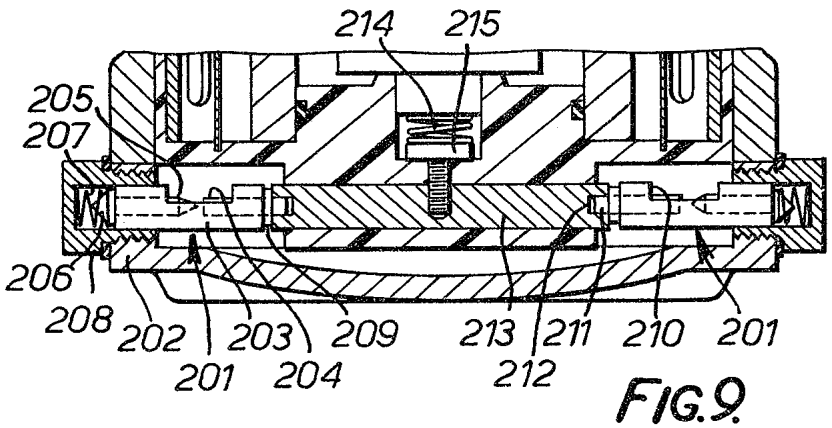

FIG.9.

Gowling & Henderson.

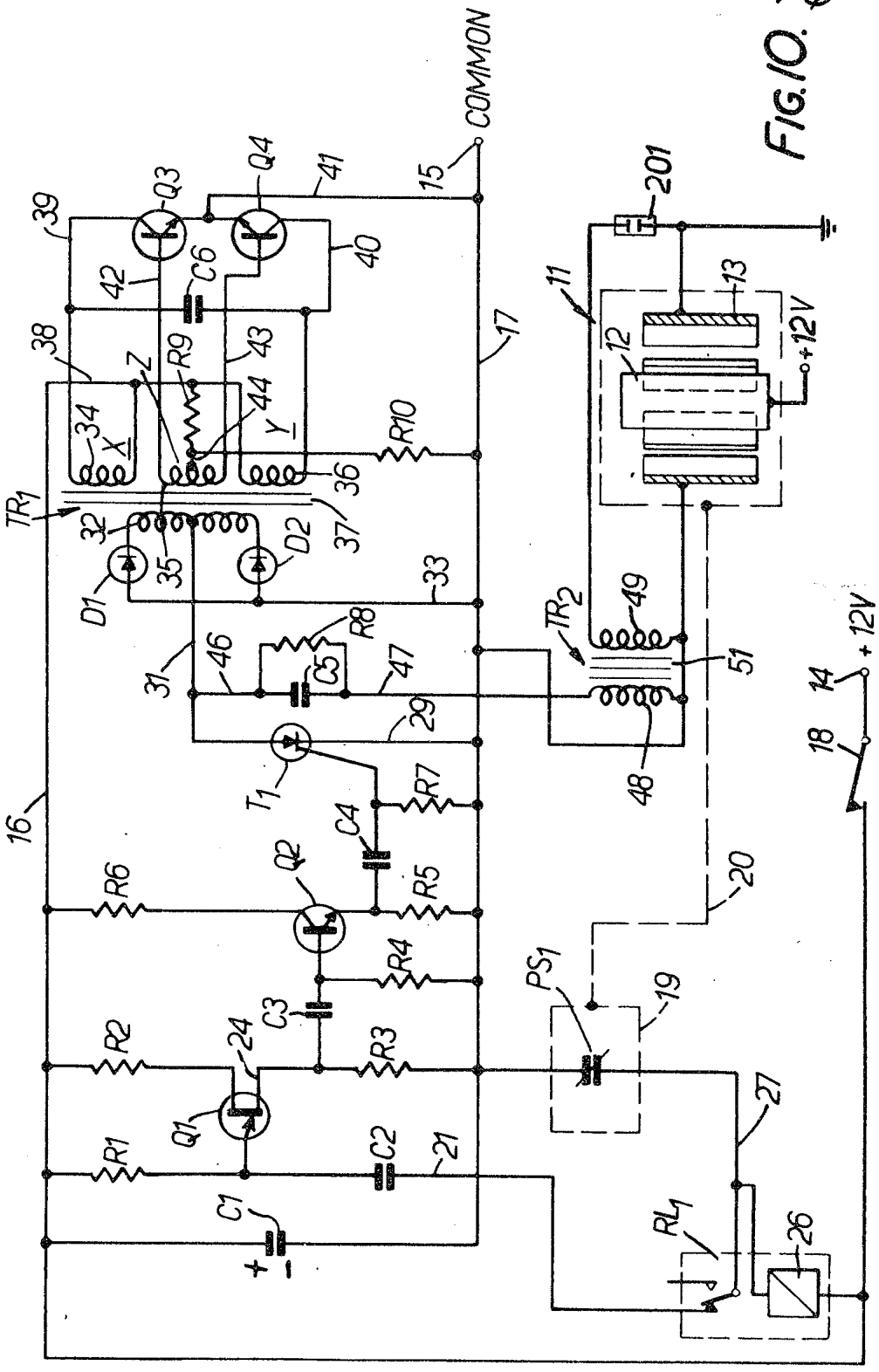

FIG. 10.

Gowling & Henderson.

FIG. 11.

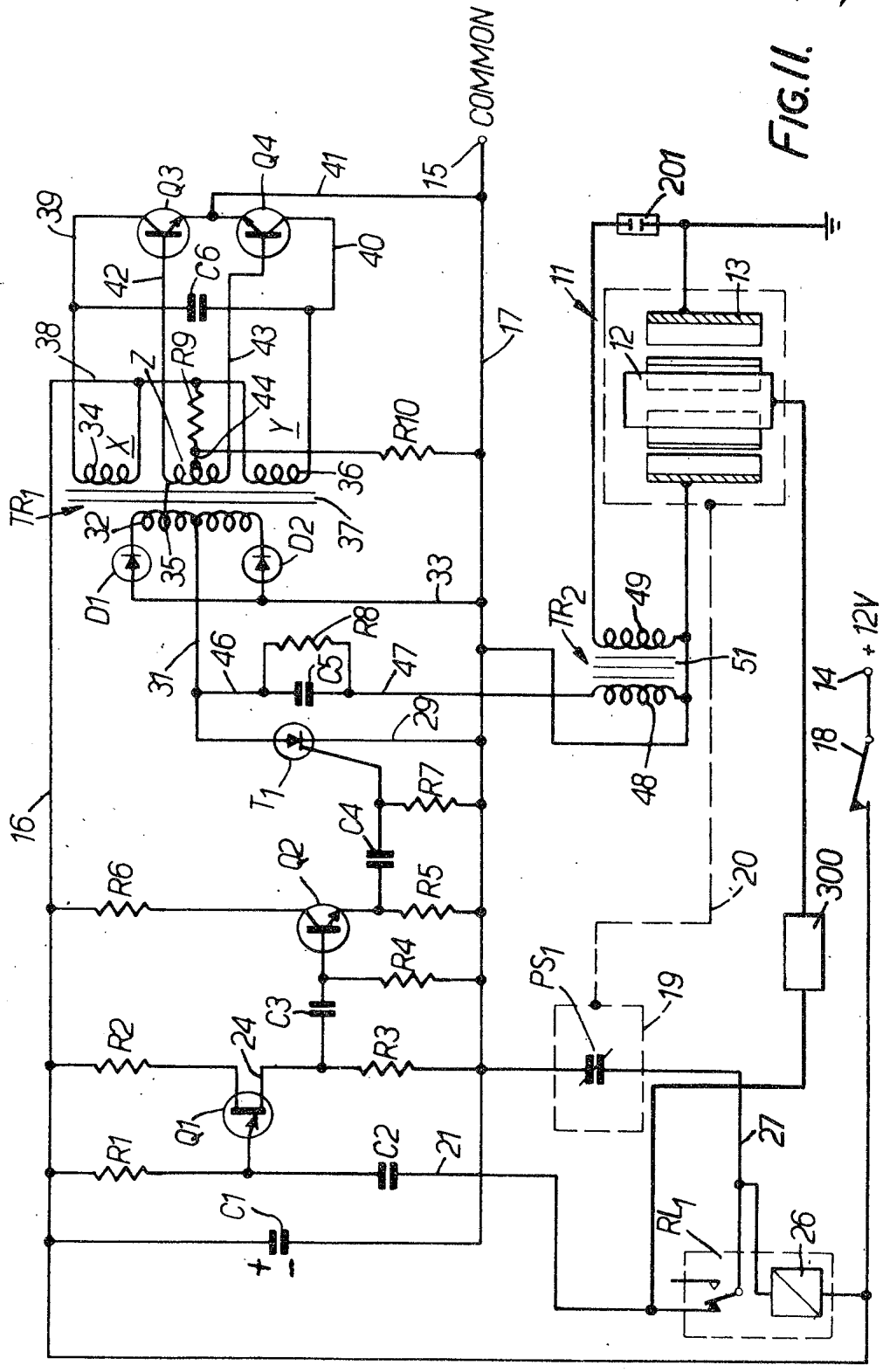

Gowling & Henderson.