MOSFET ARRAY

+5V square wave from pulse generator

(National Instruments LabVIEW)

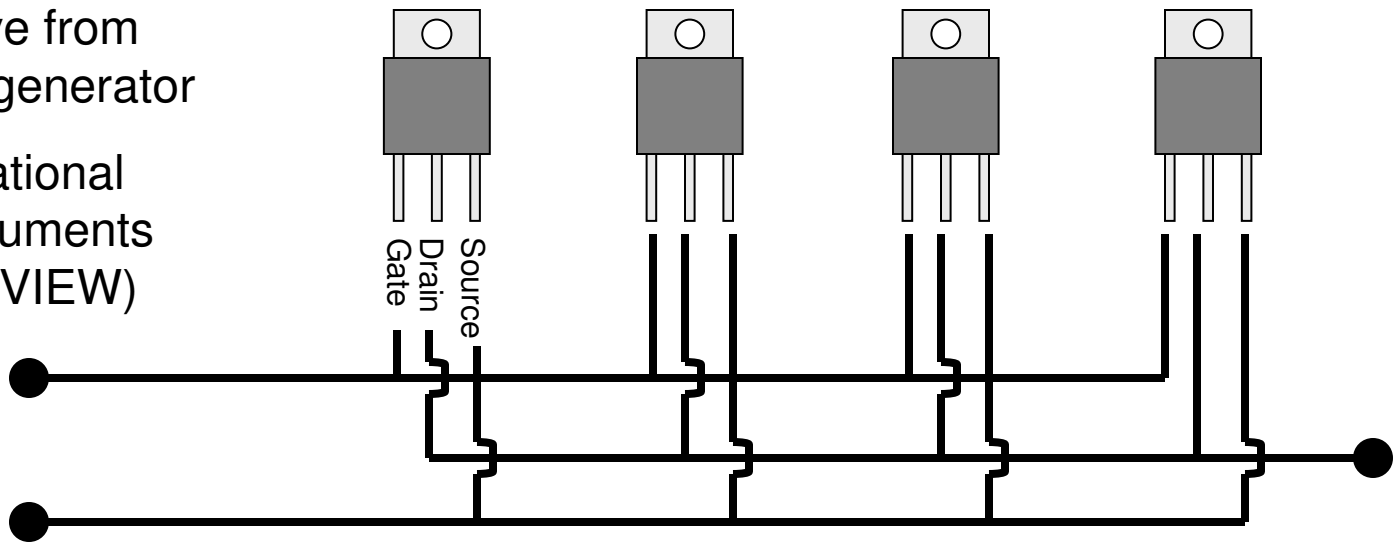

Negative from Power supply

Negative Output to WFC

STP50NE10 Power MOSFET

100V, 50A